Kitchen Pantry Cabinet

Assembly Instructions - Please keep for future reference

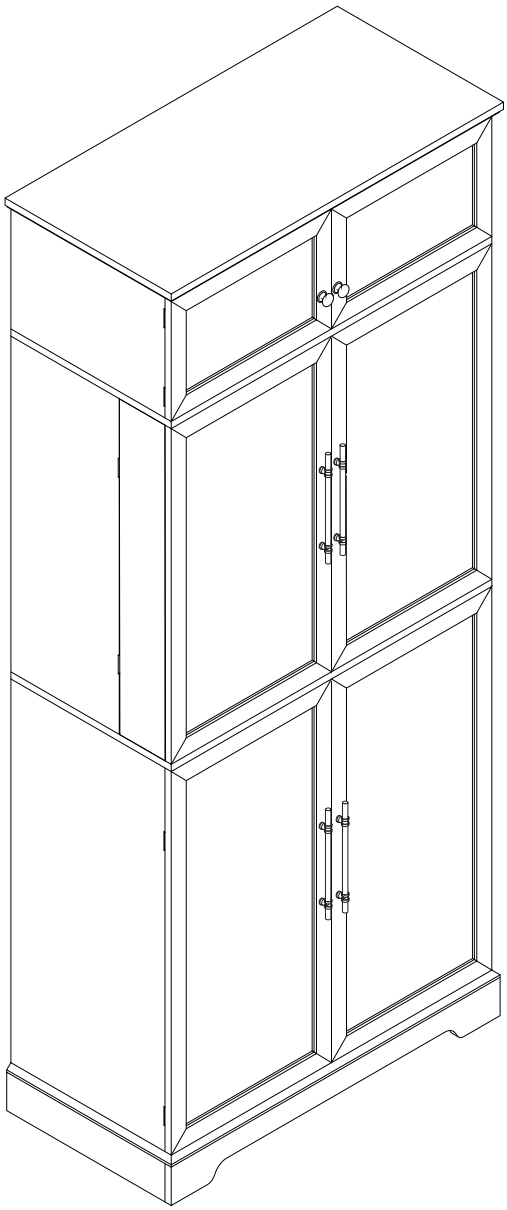

Important – Please read these instructions fully before starting assembly

Safety and Care Advice

Important – Please read these instructions fully before starting assembly

• Check you have all the components and tools listed on the following pages.

• Remove all fittings from the plastic bags and separate them into their groups.

• Keep children and animals away from the work area, small parts could choke if swallowed.

• Make sure you have enough space to layout the parts before starting.

• During assembly do not stand or put weight on the product, this could cause damage.

• Assemble the item as close to its final position (in the same room) as possible.

• Assemble on a soft level surface to avoid damaging the unit or your floor.

• Parts of the assembly will be easier with 2 people.



• To reduce the likelihood of damaging your product please ensure that your power drill is set on a low torque setting.

Care and maintenance

• Only clean using a damp cloth and mild detergent, do no use bleach or abrasive cleaners.

• From time to time check that there are no loose screws on this unit.

• This product should not be discarded with household waste. Take to your local authority waste disposal centre.

Handy Hints

• Assemble all parts and bolts loosely during assembly, only once the product is complete should you fully tighten the bolts

• Regularly check and ensure That all bolts and fittings are tightened properly.

WARNING
In order to help prevent overturning – please follow these instructions

To help prevent product toppling over please follow the below steps:-

Use the anti tip stap or wall fixing method provided (if applicable)
Do not allow children to climb or hang on the furniture
Do not open more than one drawer at a time
Do not place heavy items in the top drawers
Do not place heavy items on top of the furniture, unless the furniture has been designed for this purpose

Components - Fittings

Please check you have all the panels listed below

Note:The quantities below are the correct amount to complete the assembly. In some cases, more fittings may be supplied than required.

A 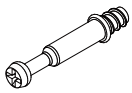 Cam Bolt x 83	B 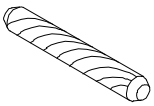 6*30mm Dowel x 68	C  Cam lock x 83	D 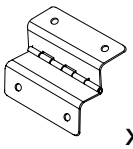 x4
E  Wooden Pad x 4	F 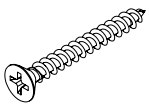 4*35mm Screw x 25	G  Round handle x2 screw 4x20mm	H  3*12mm Screw x 64
I 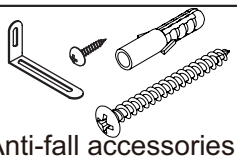 Anti-fall accessories x2	J 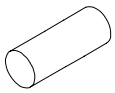 Shelf support pin x 24	K 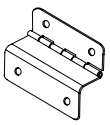 x8	L 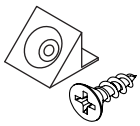 x20
M  Handle 300mm x 4 screw 4x20mm	DR 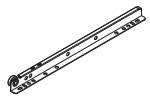 300mm runner x 1	DL 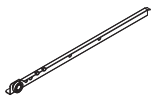 300mm runner x 1	CR 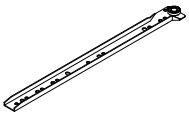 300mm runner x 1
CL 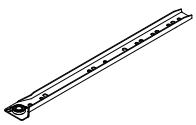 300mm runner x 1	O Felt Pad x 8	P 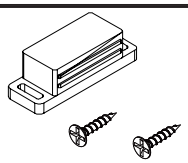 x 4	Q 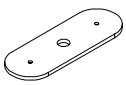 x6

Using Camlocks

Step 1

Connect the male camlock as diected in the assembly instructions using a scewdriver.

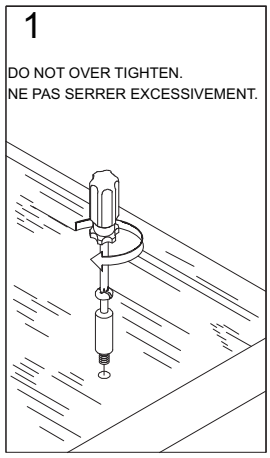

Step 2

Push the male camlock into the entry hole.

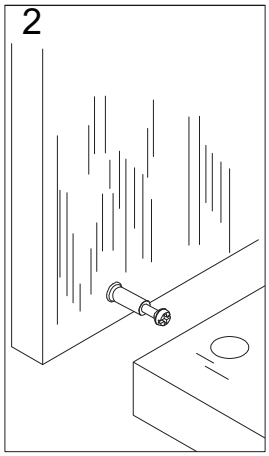

Step 3

Insert the female camlock as shown in the instruction.

Note: ensure that the arrow on the top of the camlock points towards the entry hole for the male camlock.

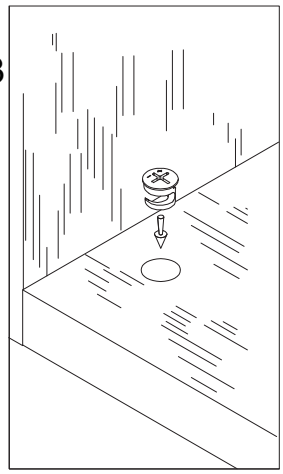

Step 4

Turn the female camlock clockwise with a screwdriver.

You should feel a click when the camlock is locked in place.

The joint is now secure.

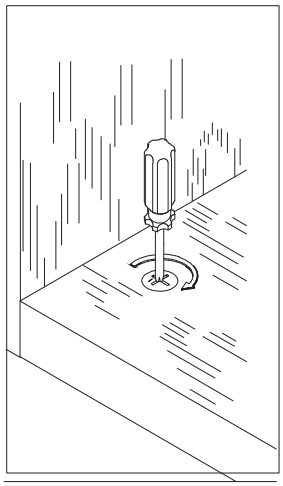

Assembly Instructions

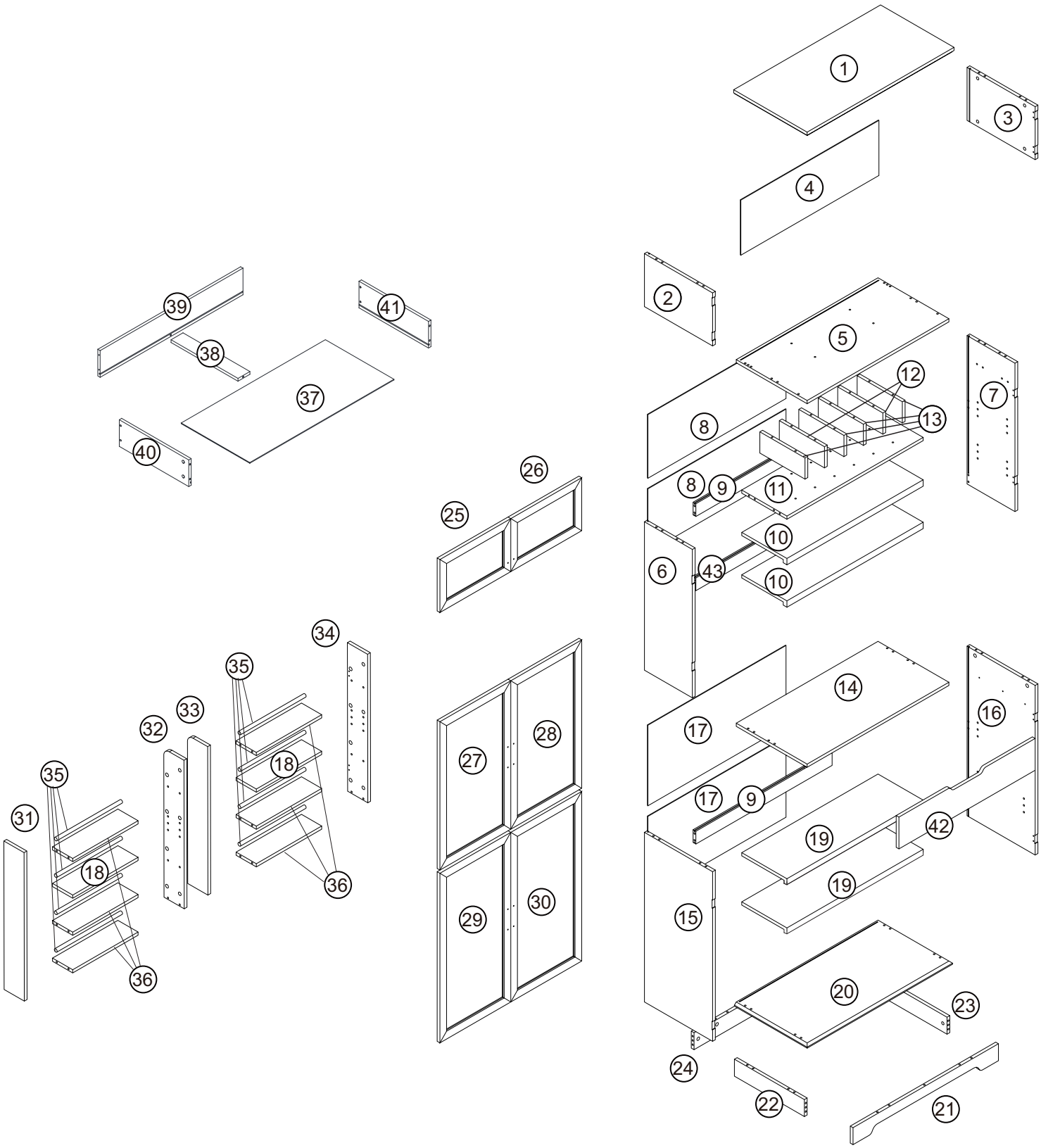

Assembly Instructions

1 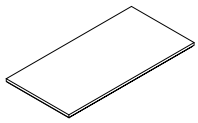 1PC	2 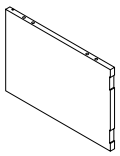 1PC	3 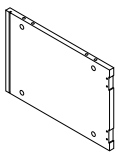 1PC
4 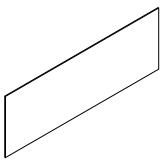 1PC	5 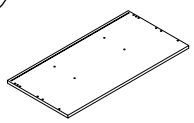 1PC	6  1PC
7 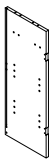 1PC	8 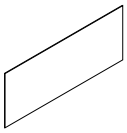 2PC	9  2PC
10 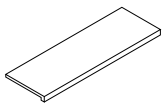 2PC	11 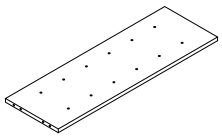 1PC	12 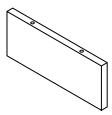 2PC
13 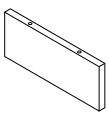 4PC	14 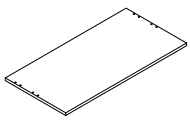 1PC	15  1PC
16 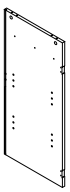 1PC	17 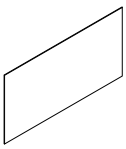 2PC	18 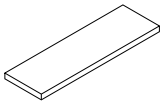 2PC
19 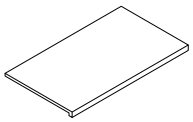 2PC	20 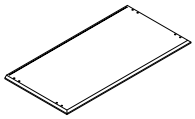 1PC	21 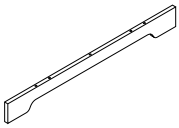 1PC

Assembly Instructions

22 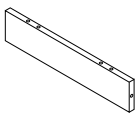 1PC	23 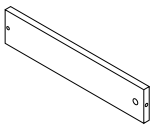 1PC	24 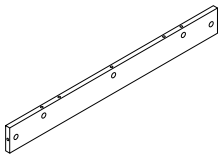 1PC
25 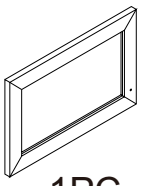 1PC	26 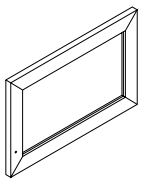 1PC	27 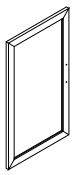 1PC
28 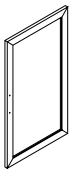 1PC	29 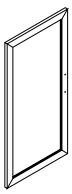 1PC	30 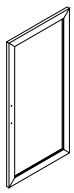 1PC
31  1PC	32  1PC	33  1PC
34  1PC	35 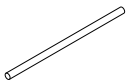 8PC	36 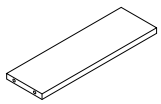 6PC
37 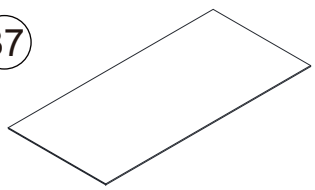 1PC	38 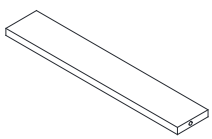 1PC	39 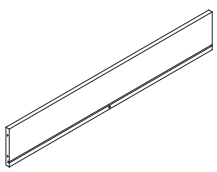 1PC
40 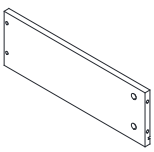 1PC	41 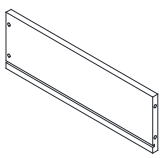 1PC	42 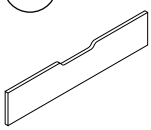 1PC
43 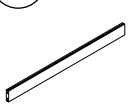 1PC		

Assembly Instructions

Step 1

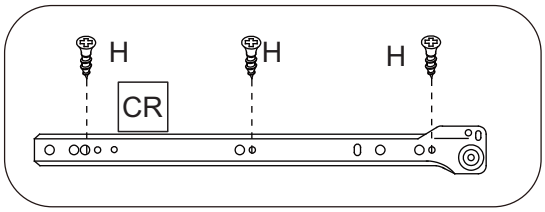

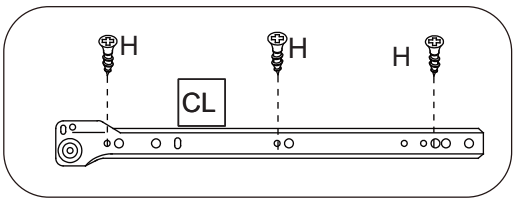

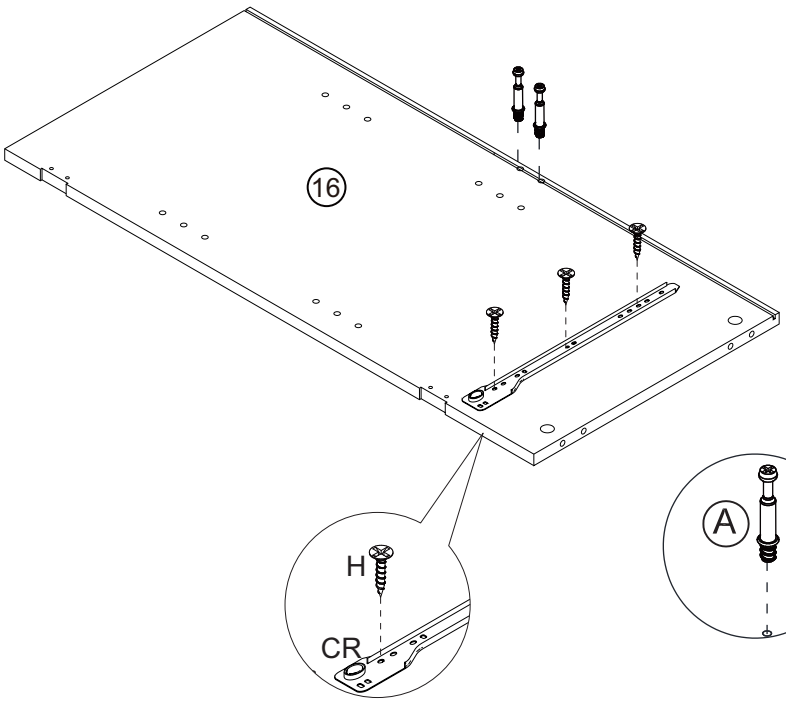

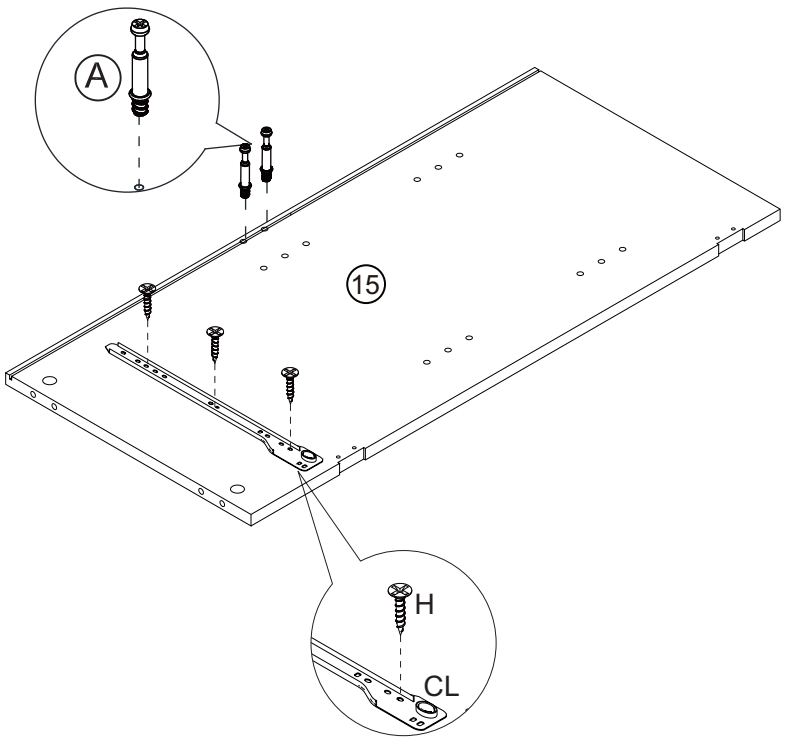

Ⓐ 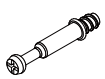	Cam Bolt x 4
Ⓗ 	3*12mm Screw x 6
CR 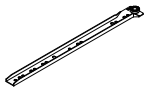	300mm runner x 1
CL 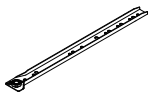	300mm runner x 1

Assembly Instructions

Step 2

The thin plate needs to be fully inserted into the groove. If the insertion is not smooth, you can try pressing from the front or the back to make adjustments until the thin plate is fully inserted into the groove.

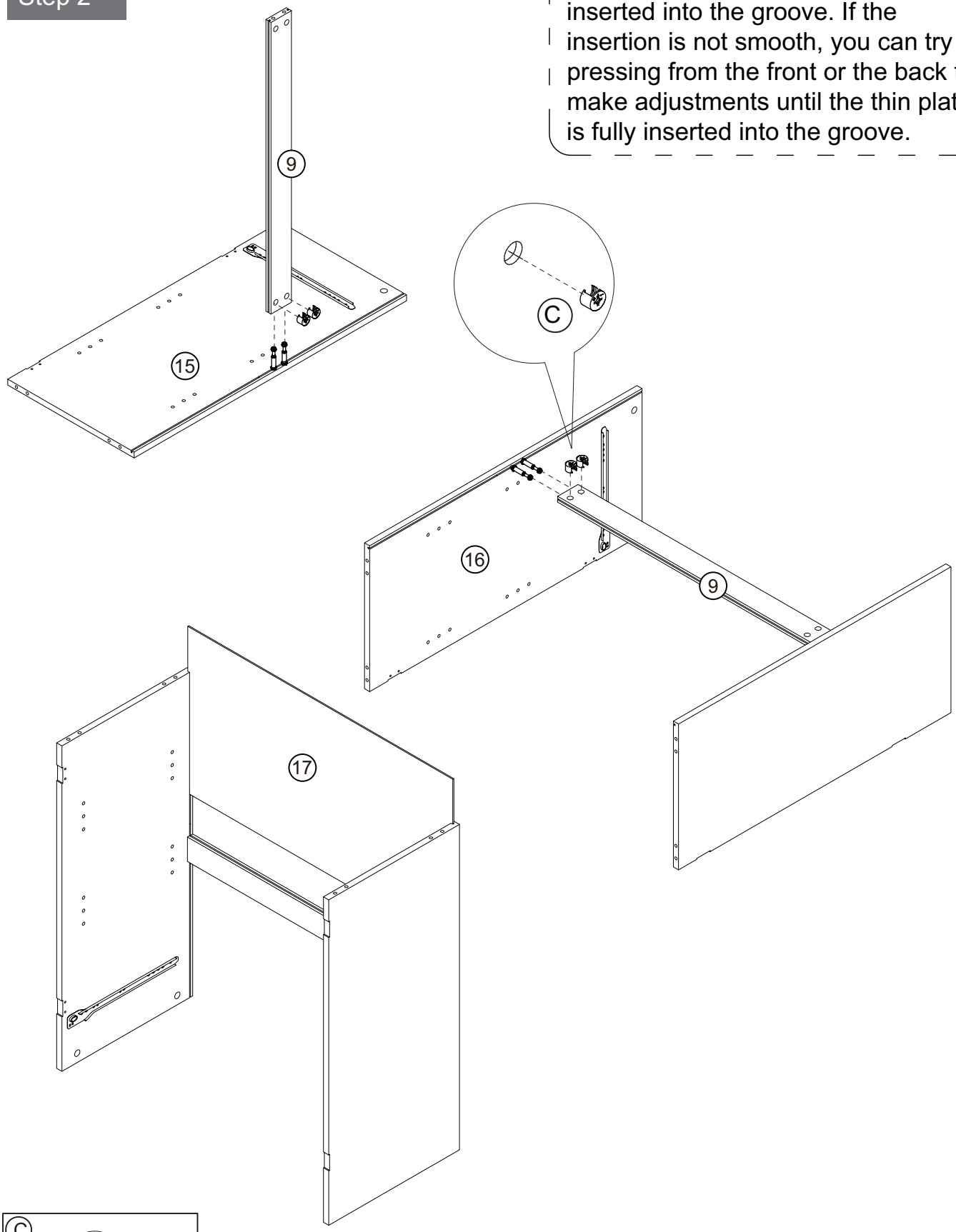

C



Cam lock x 4

Assembly Instructions

Step **3**

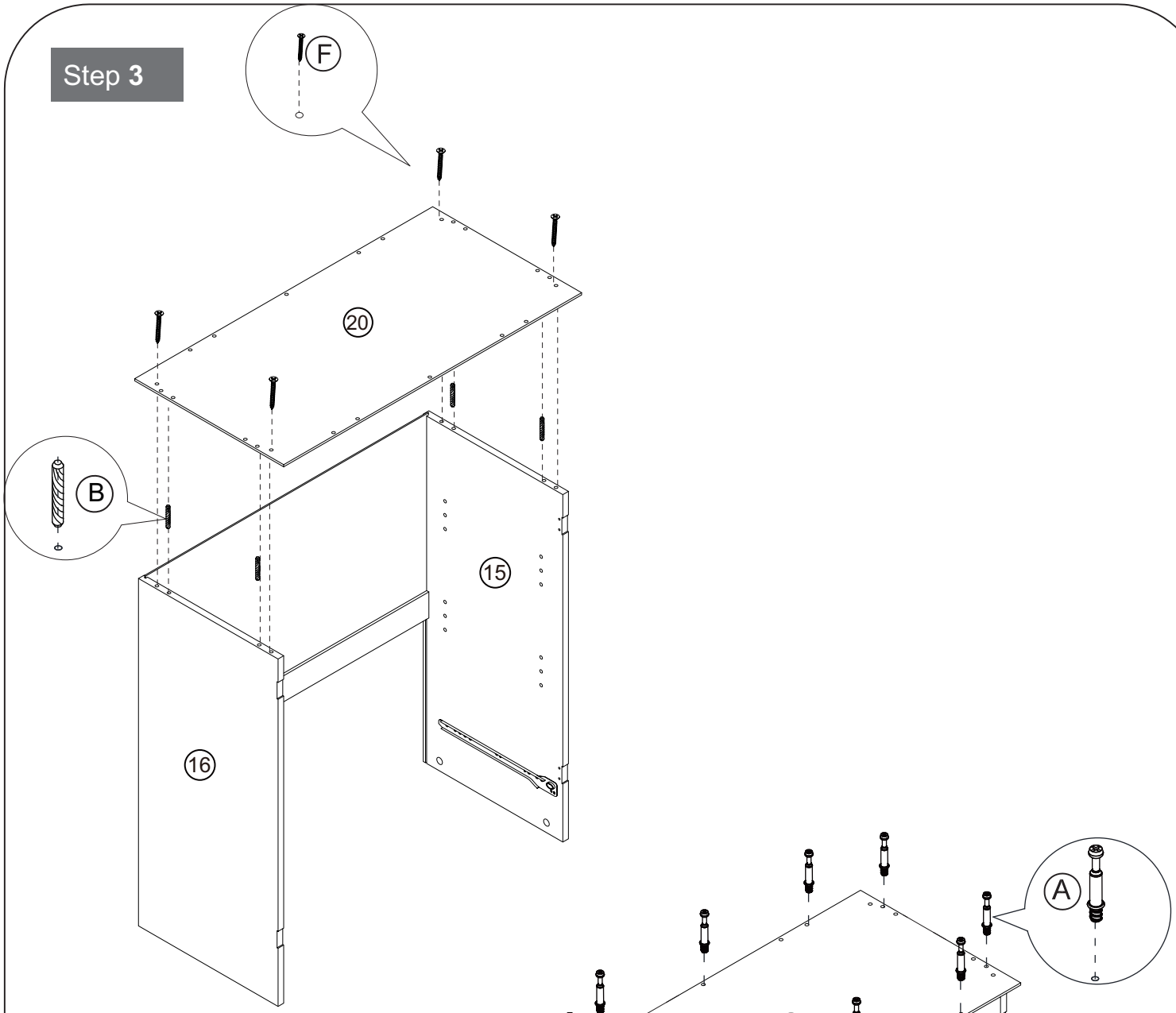

A	Cam Bolt x 10
B	6*30mm Dowel x 4
F	4*35mm Screw x 4

Assembly Instructions

Step **4**

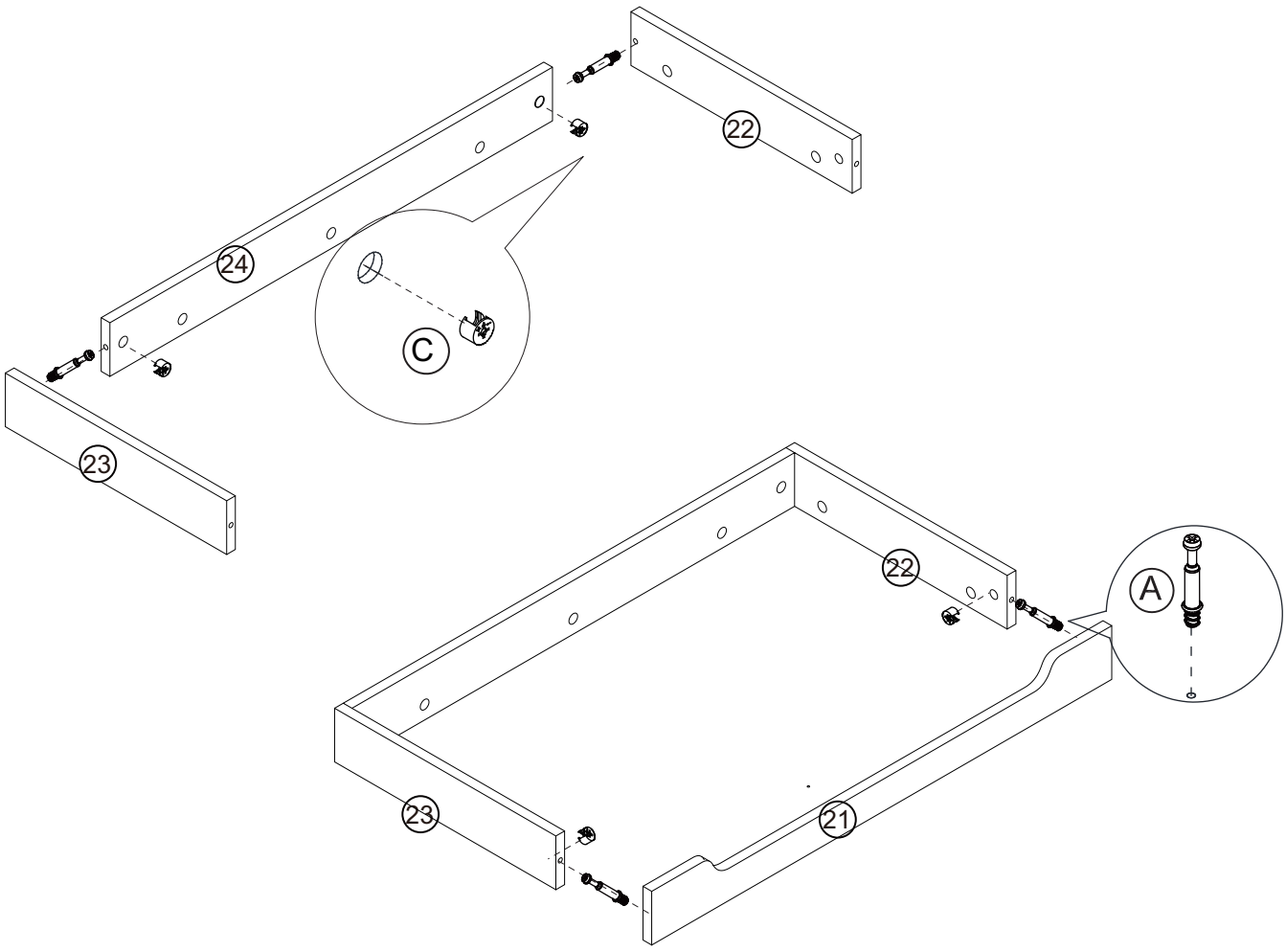

A	 Cam Bolt x 4
C	 Cam lock x 4

Assembly Instructions

Step 5

The thin plate needs to be fully inserted into the groove. If the insertion is not smooth, you can try pressing from the front or the back to make adjustments until the thin plate is fully inserted into the groove.

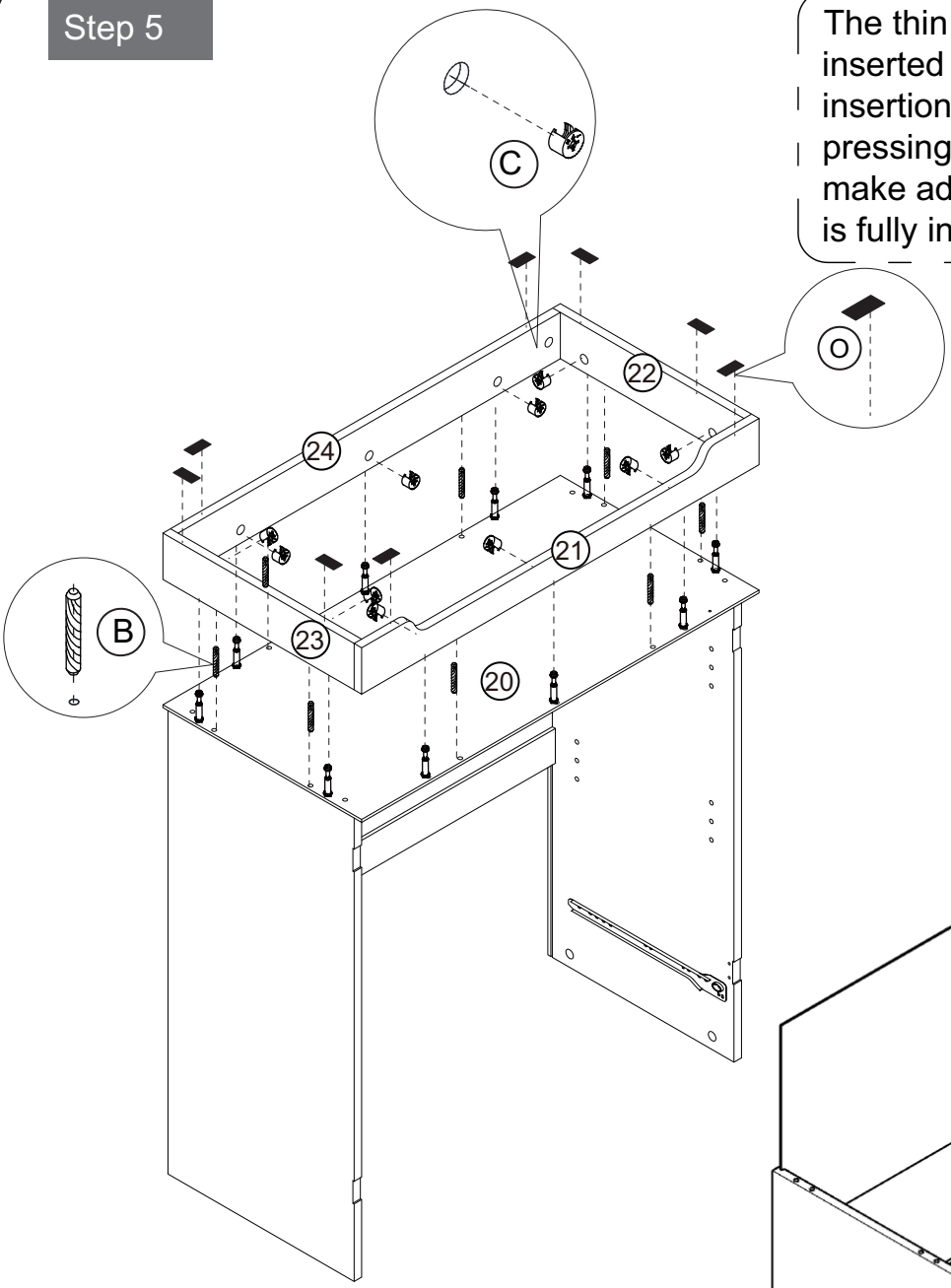

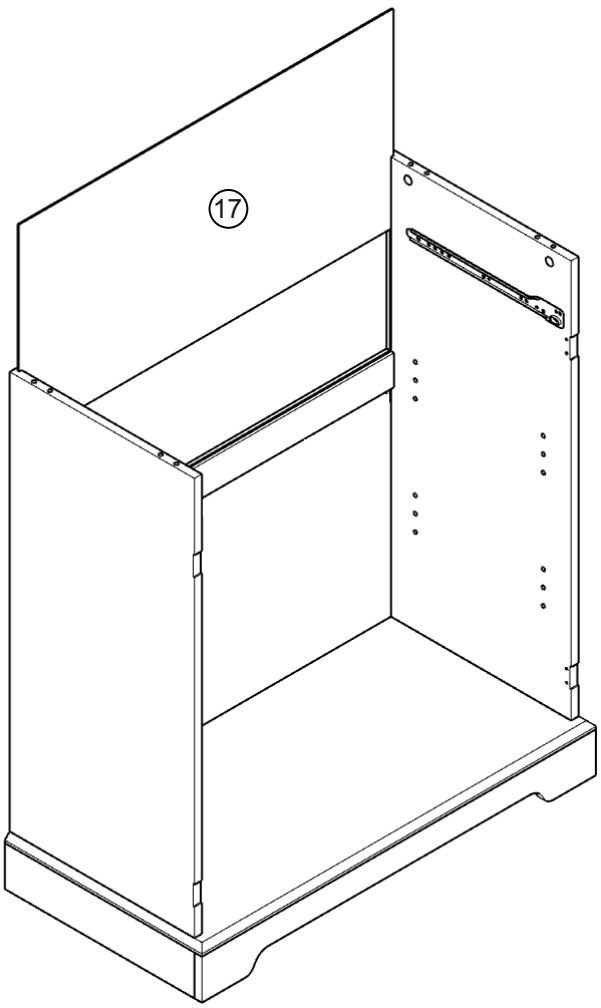

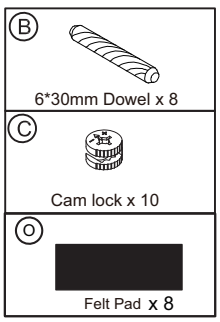

Assembly Instructions

Step **6**

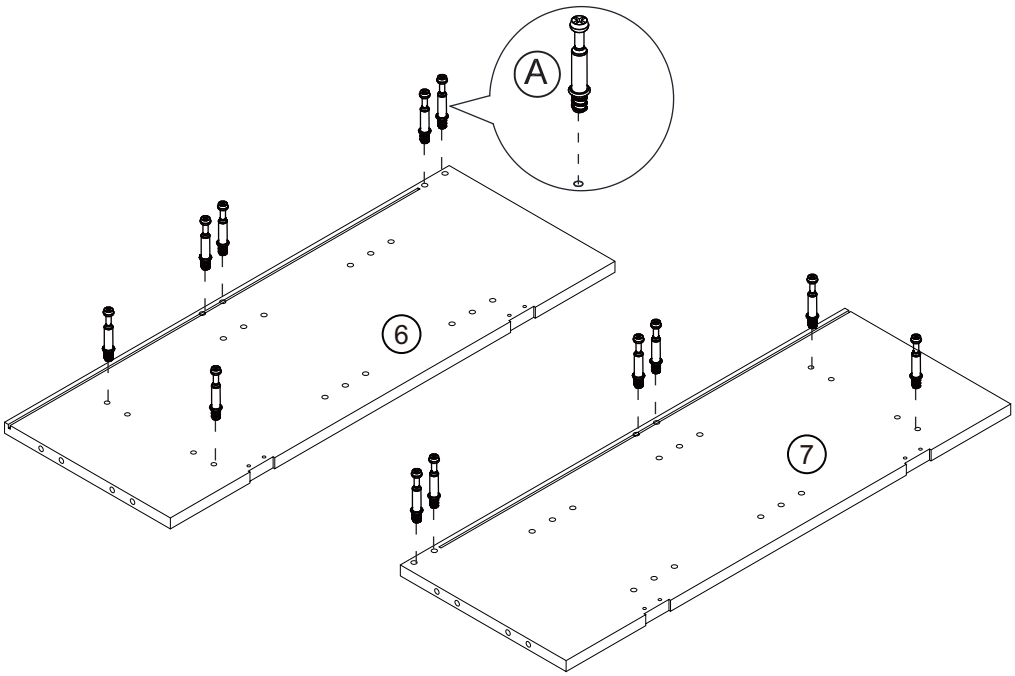

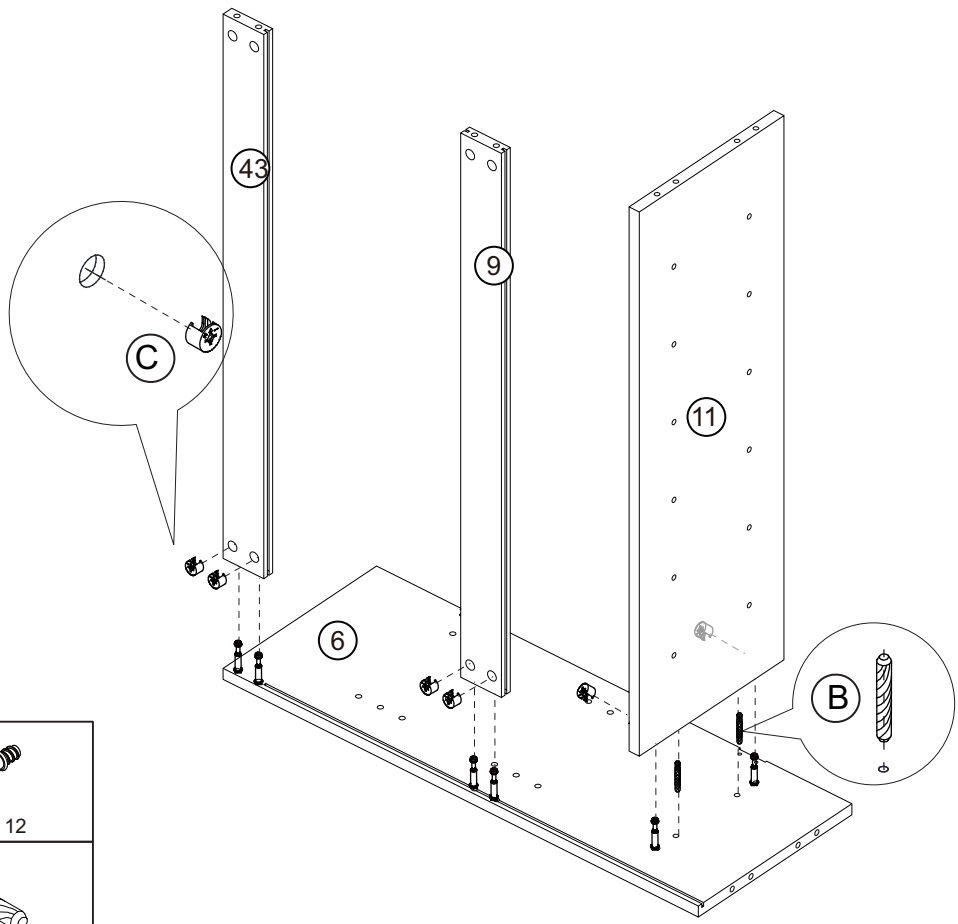

A	Cam Bolt x 12
B	6*30mm Dowel x 2
C	Cam lock x 6

Assembly Instructions

Step **7**

The thin plate needs to be fully inserted into the groove. If the insertion is not smooth, you can try pressing from the front or the back to make adjustments until the thin plate is fully inserted into the groove.

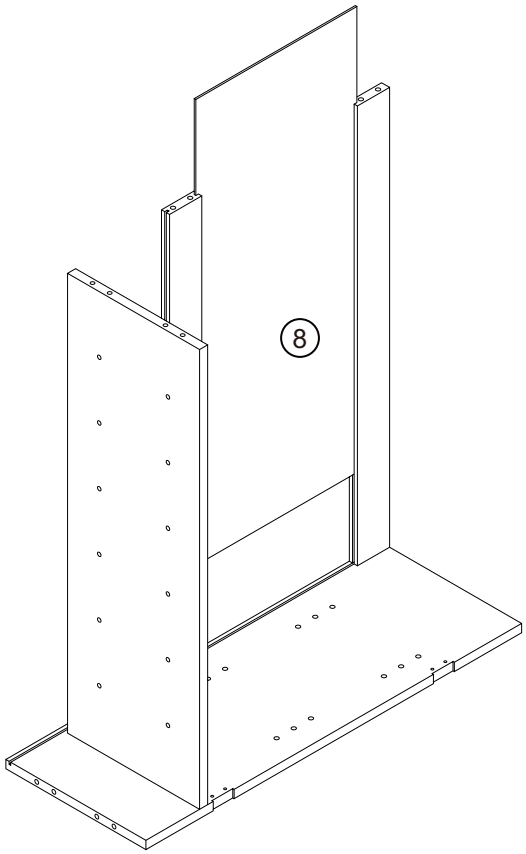

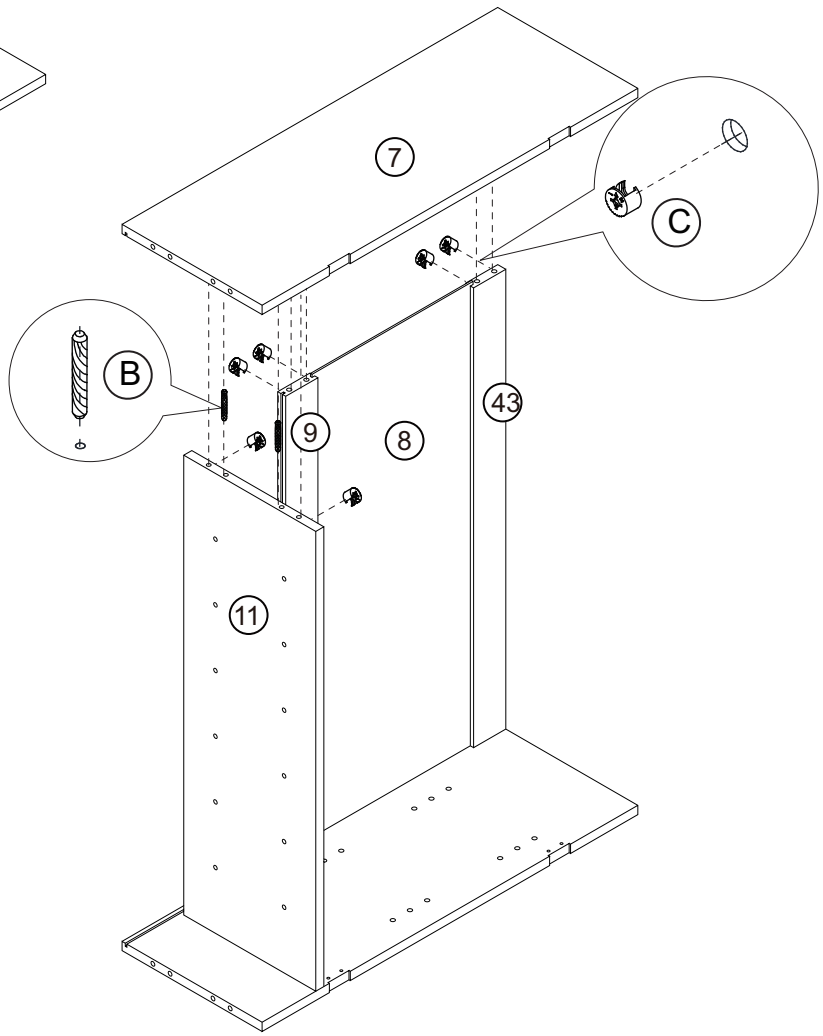

B	6*30mm Dowel x 2
C	Cam lock x 6

Assembly Instructions

Step **8**

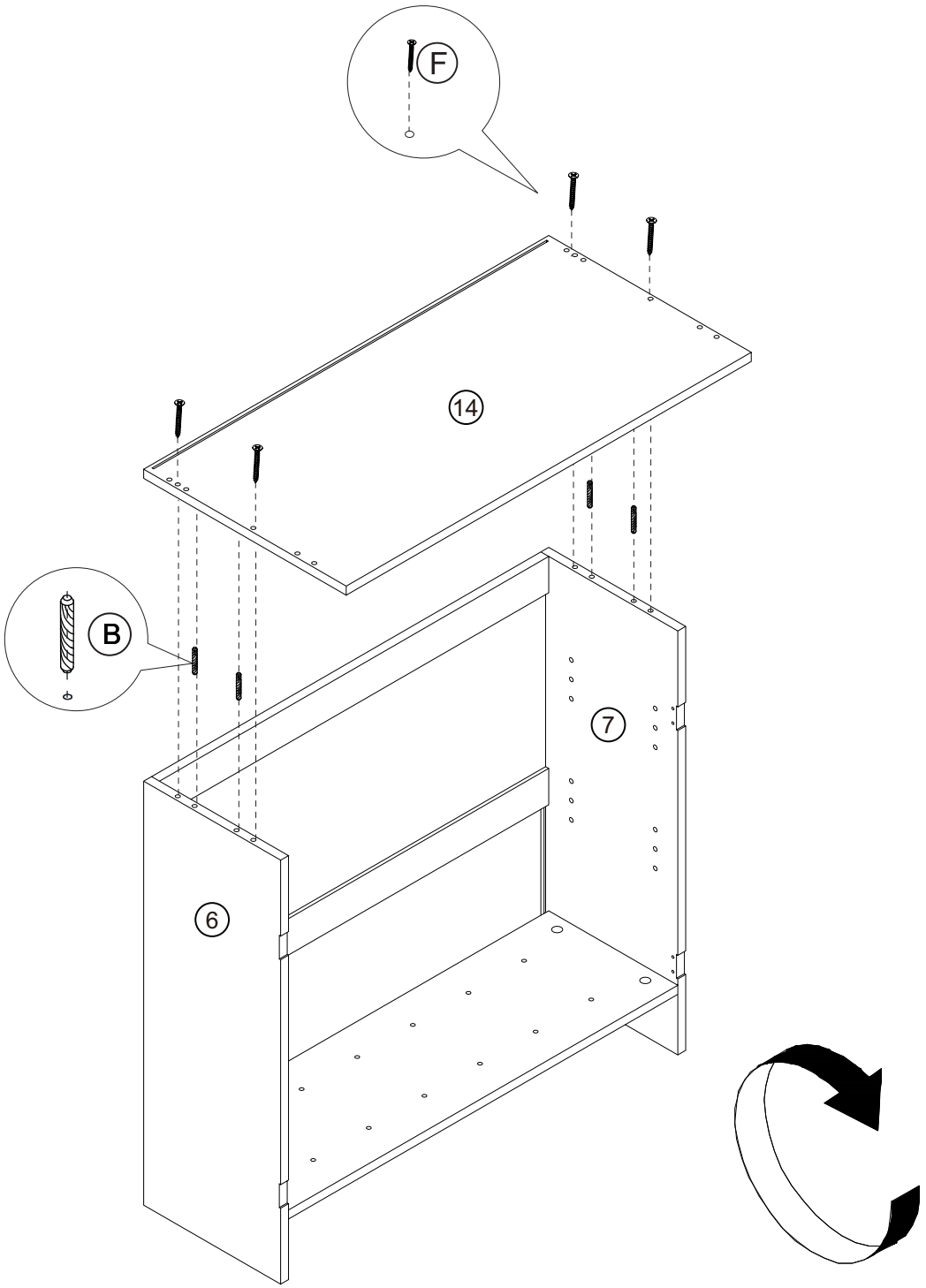

Ⓑ
6*30mm Dowel x 4

Ⓕ
4*35mm Screw x 4

Assembly Instructions

Step **9**

The thin plate needs to be fully inserted into the groove. If the insertion is not smooth, you can try pressing from the front or the back to make adjustments until the thin plate is fully inserted into the groove.

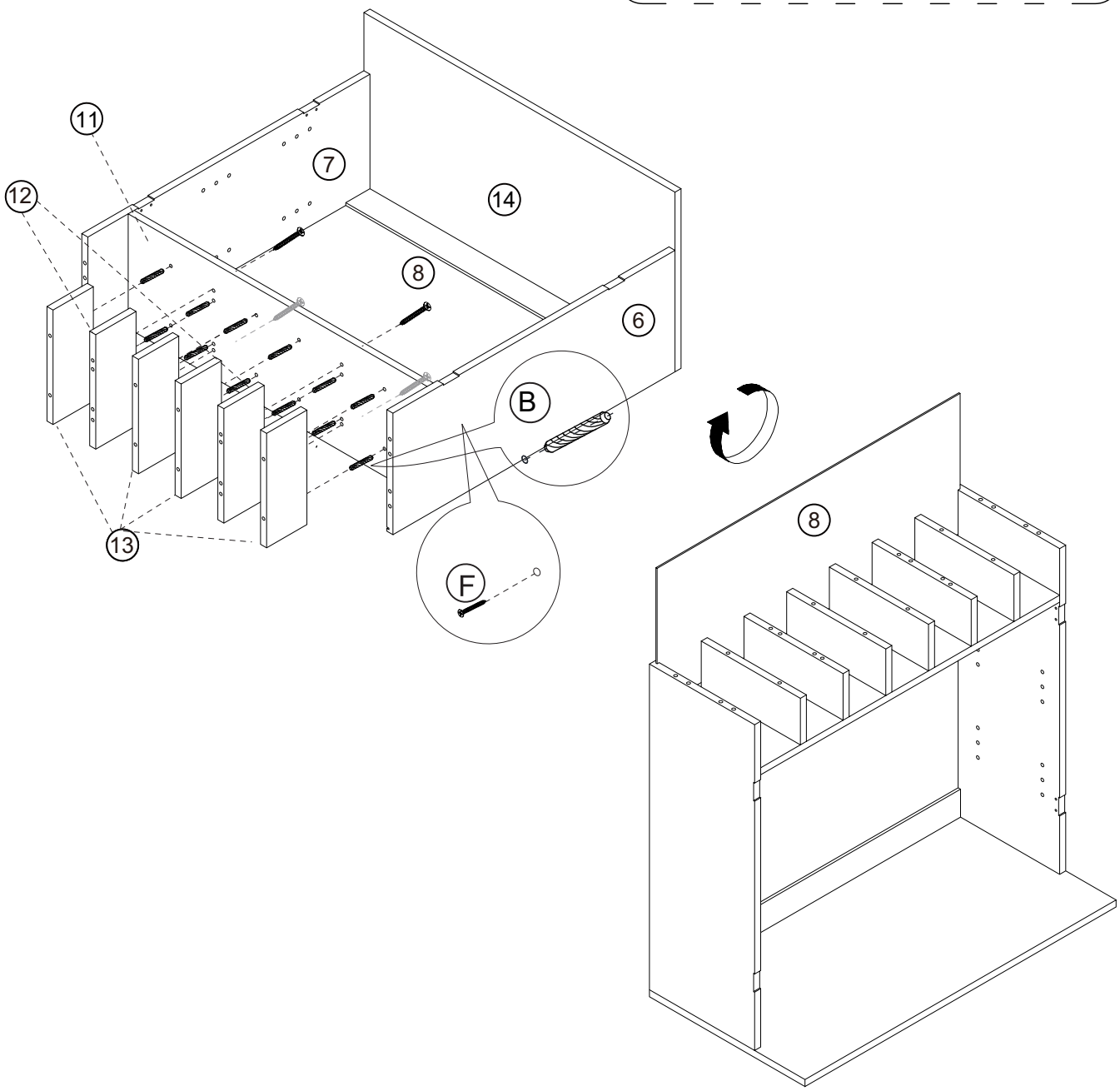

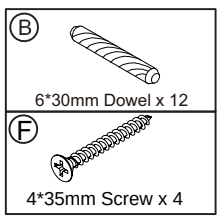

Assembly Instructions

Step **10**

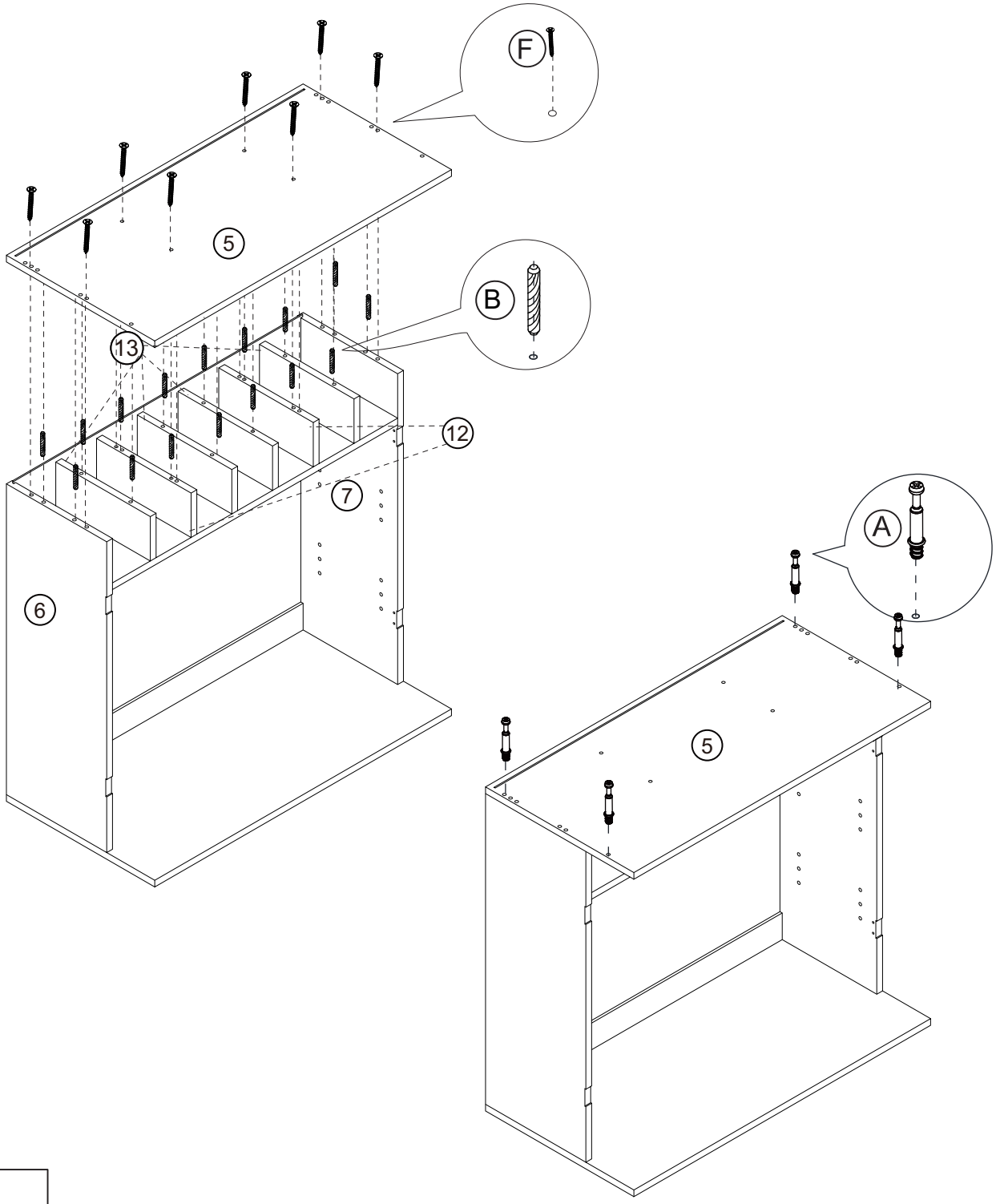

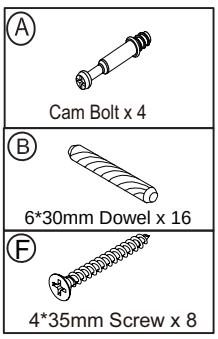

Assembly Instructions

Step **11**

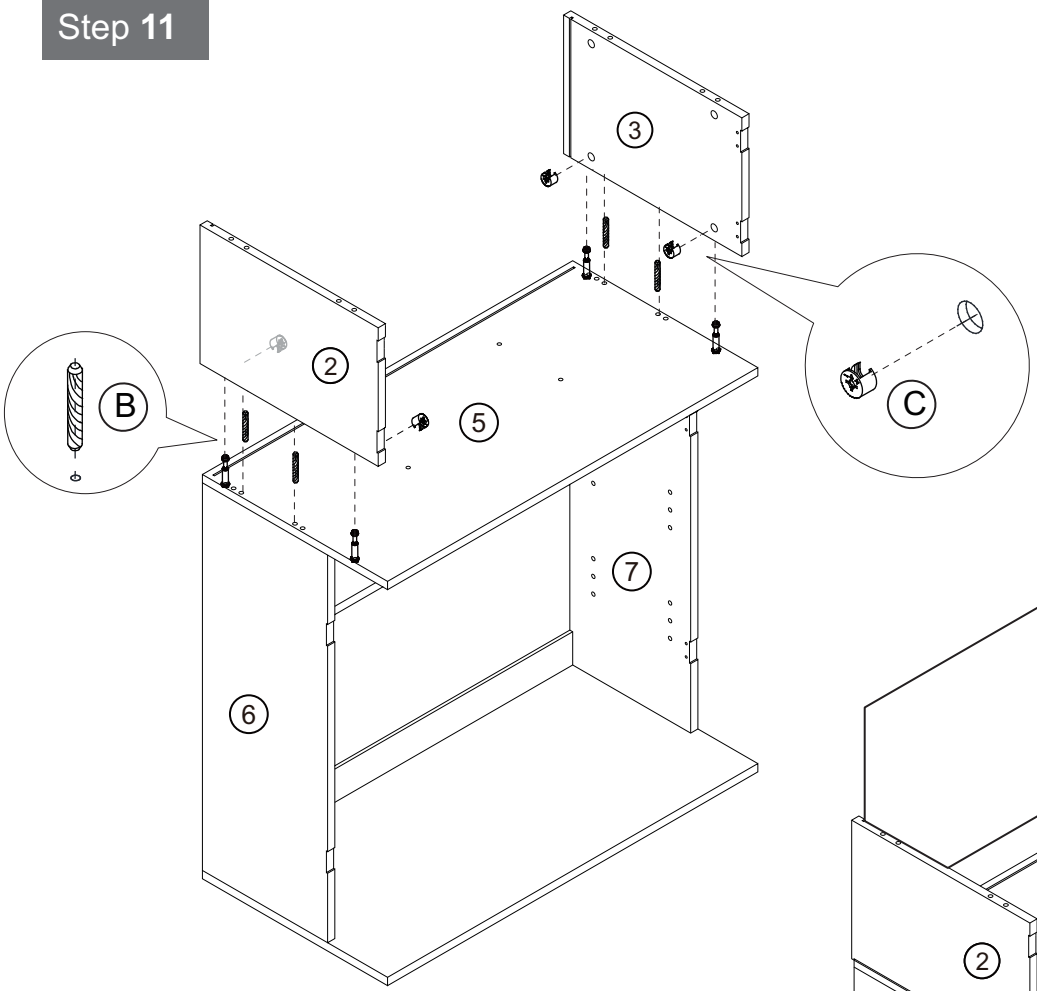

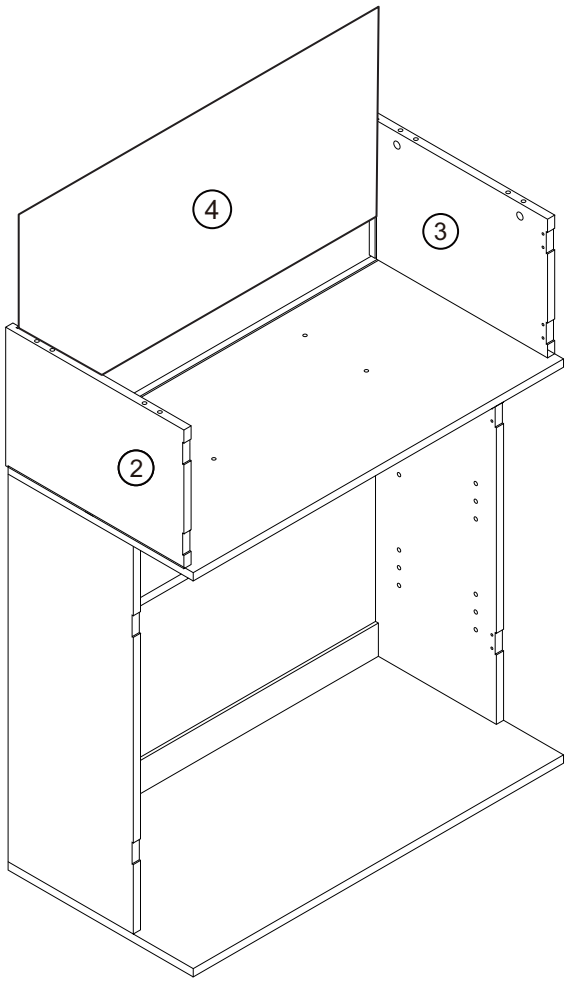

B	6*30mm Dowel x 4
C	Cam lock x 4

The thin plate needs to be fully inserted into the groove. If the insertion is not smooth, you can try pressing from the front or the back to make adjustments until the thin plate is fully inserted into the groove.

Assembly Instructions

Step **12**

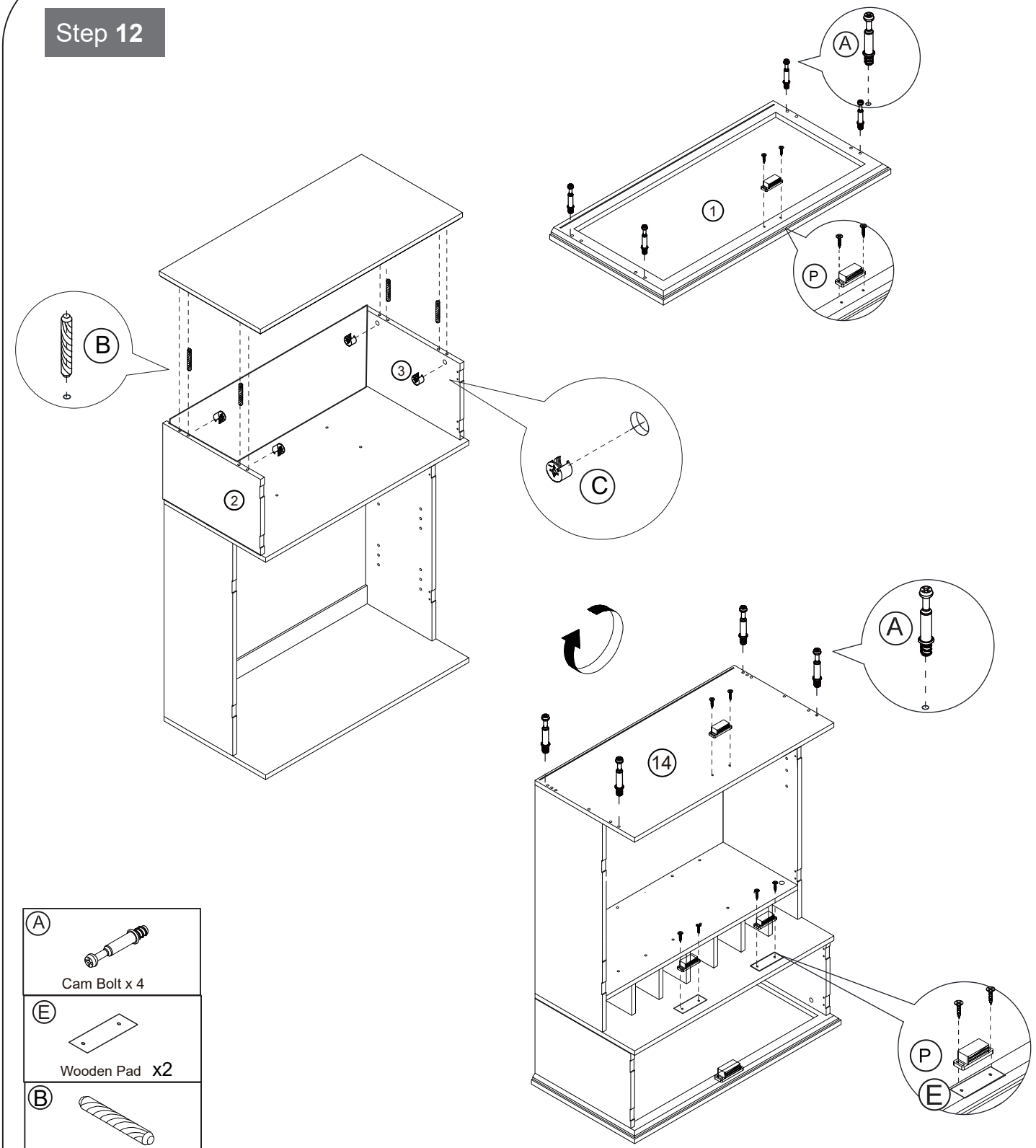

A	Cam Bolt x 4
E	Wooden Pad x2
B	6*30mm Dowel x 4
C	Cam lock x 8
P	x4

Assembly Instructions

Step **13**

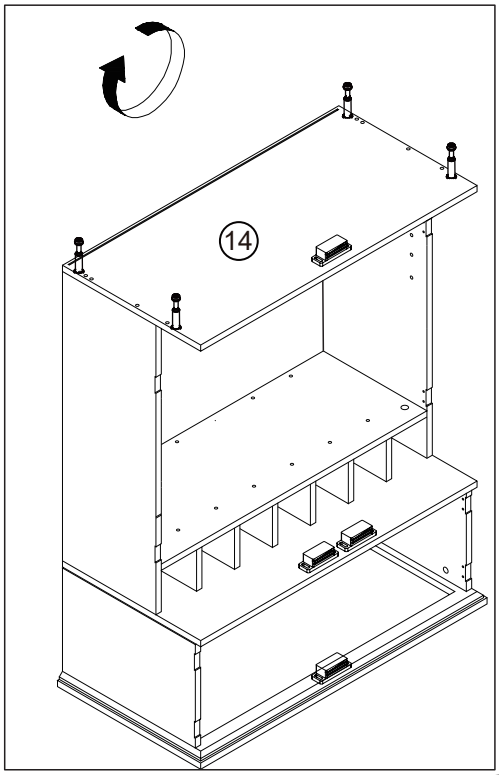

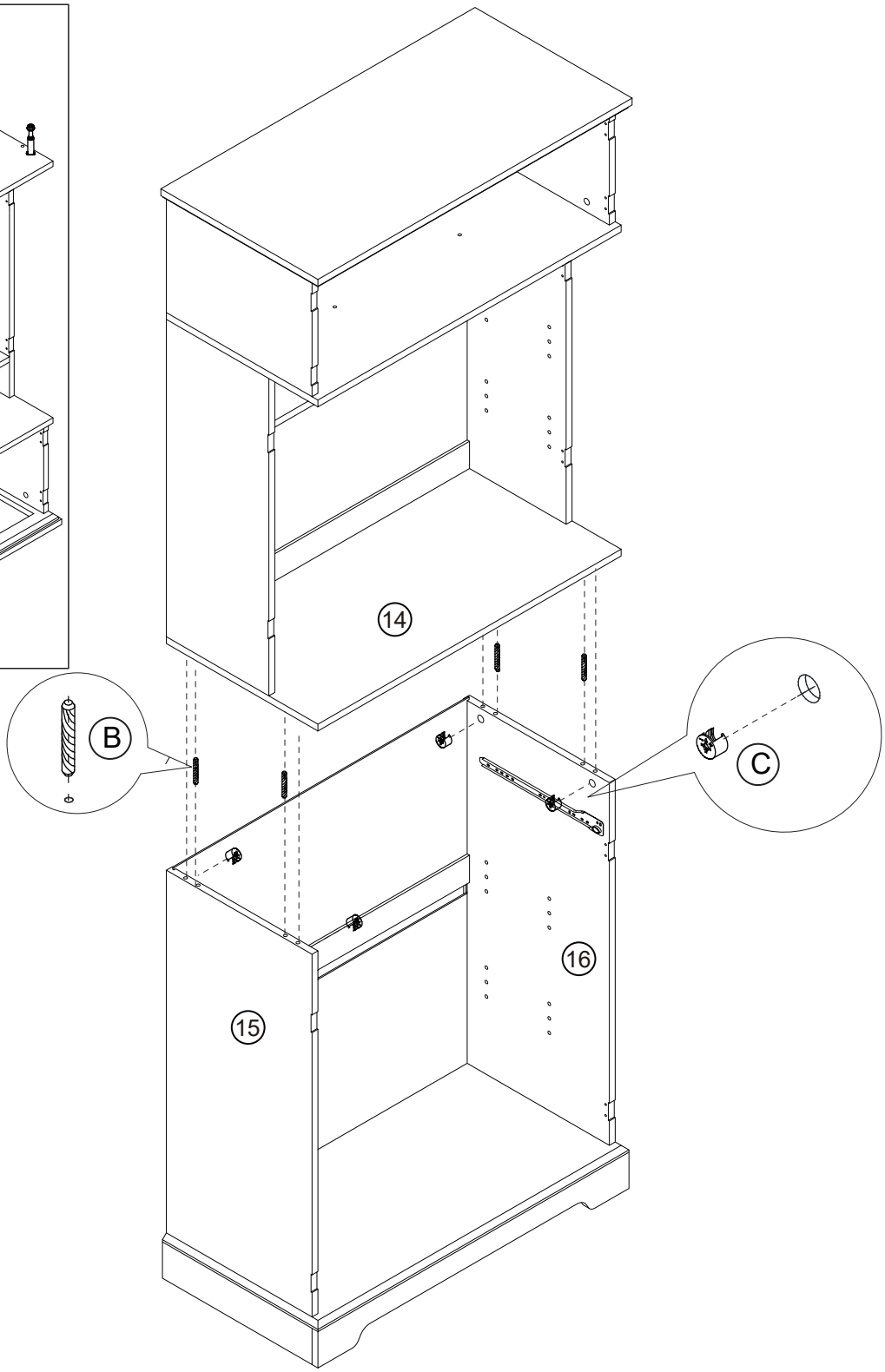

B	6*30mm Dowel x 4
C	Cam lock x 4

Assembly Instructions

Step **14**

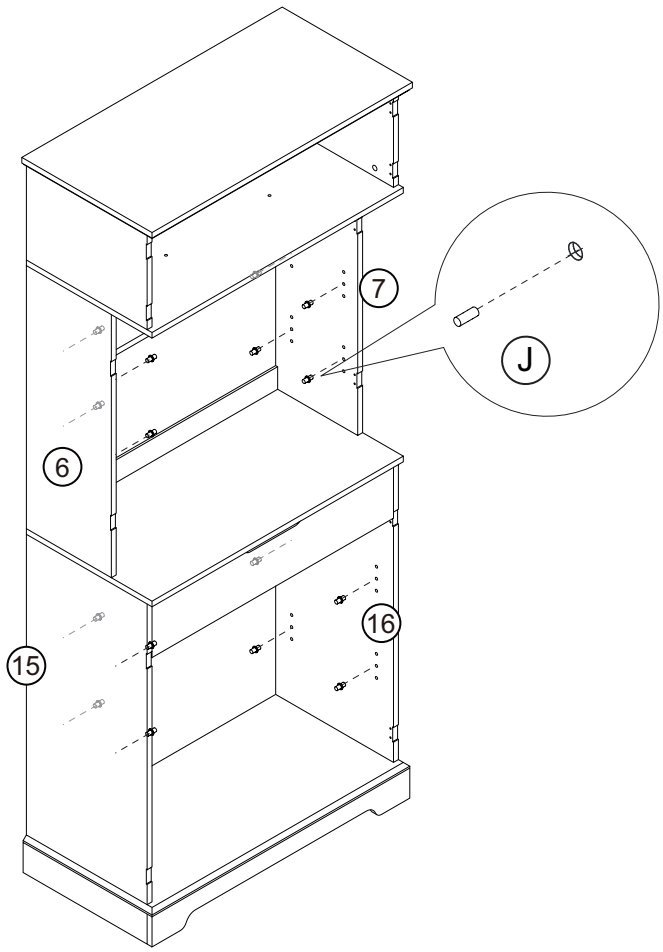

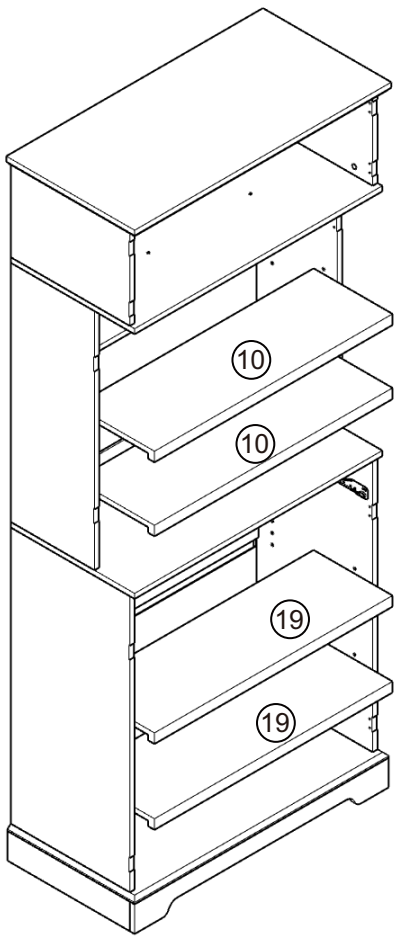

J



Shelf support pin x 16

Assembly Instructions

Step **15**

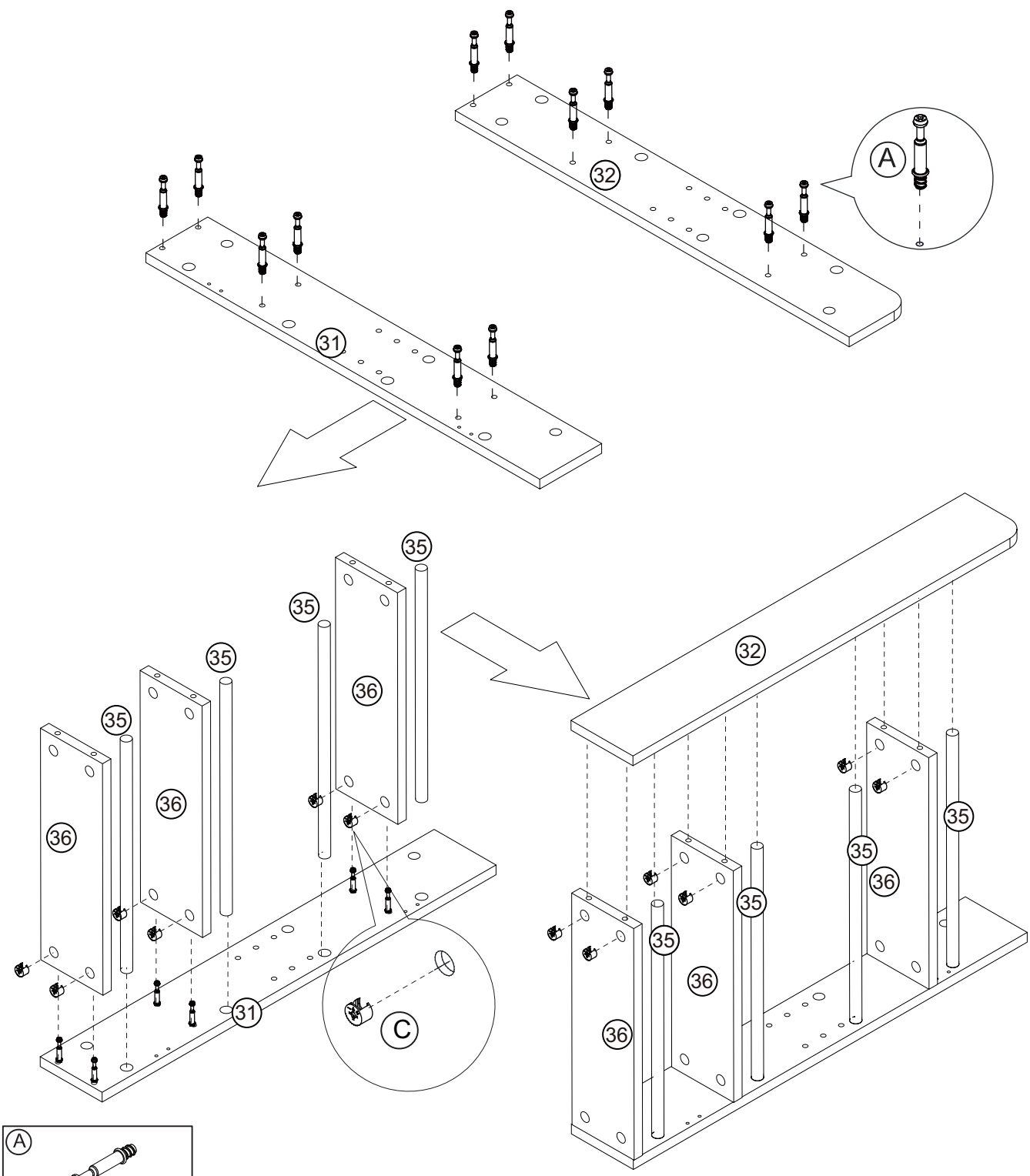

A	Cam Bolt x 12
C	Cam lock x 12

Assembly Instructions

Step **16**

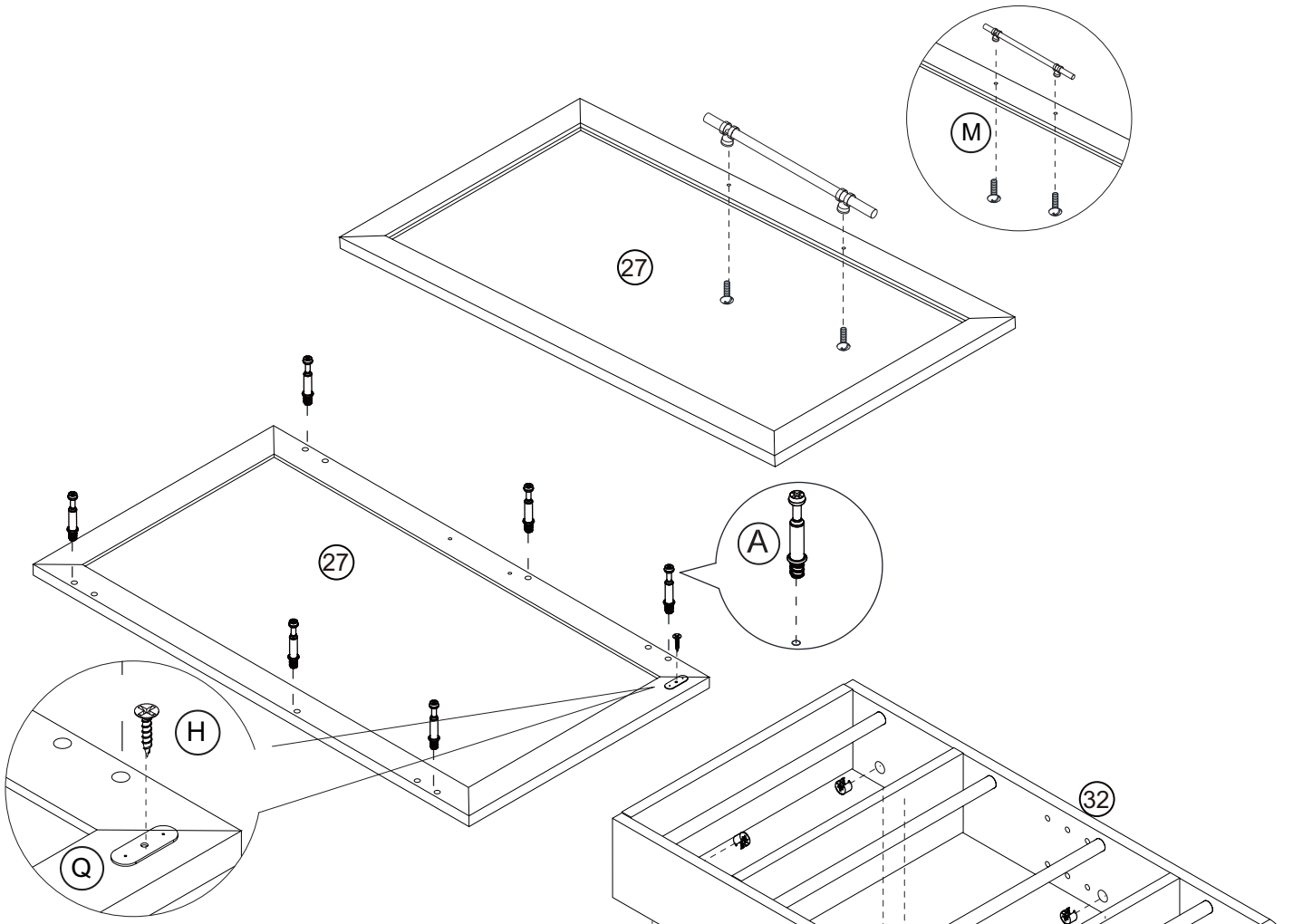

Q
x1

A
Cam Bolt x 6

B
6*30mm Dowel x 4

C
Cam lock x 6

M
Handle 300mm x 1
screw 4x20mm

H
3*12mm Screw x 1

Assembly Instructions

Step **17**

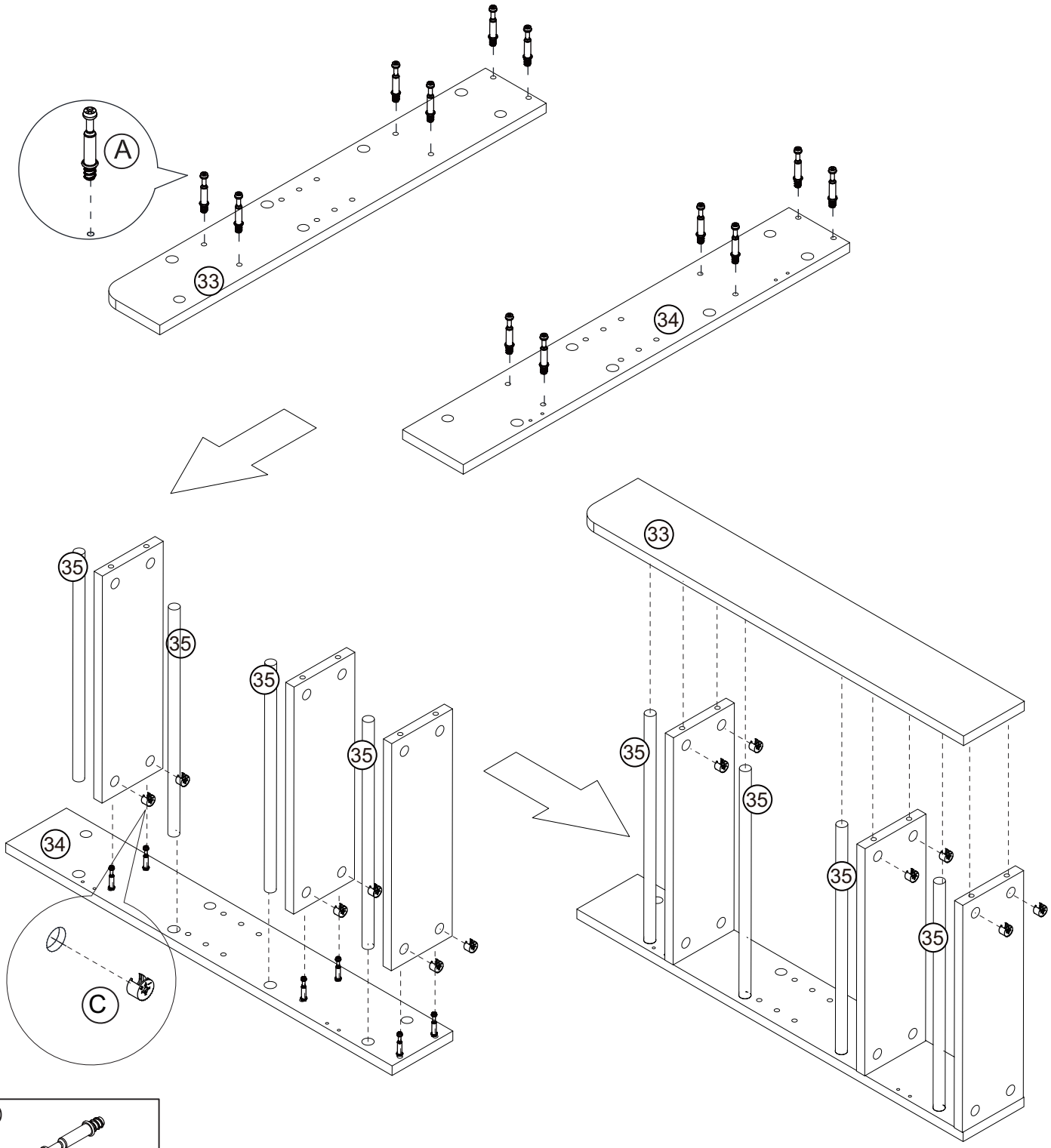

A	Cam Bolt x 12
C	Cam lock x 12

Assembly Instructions

Step **18**

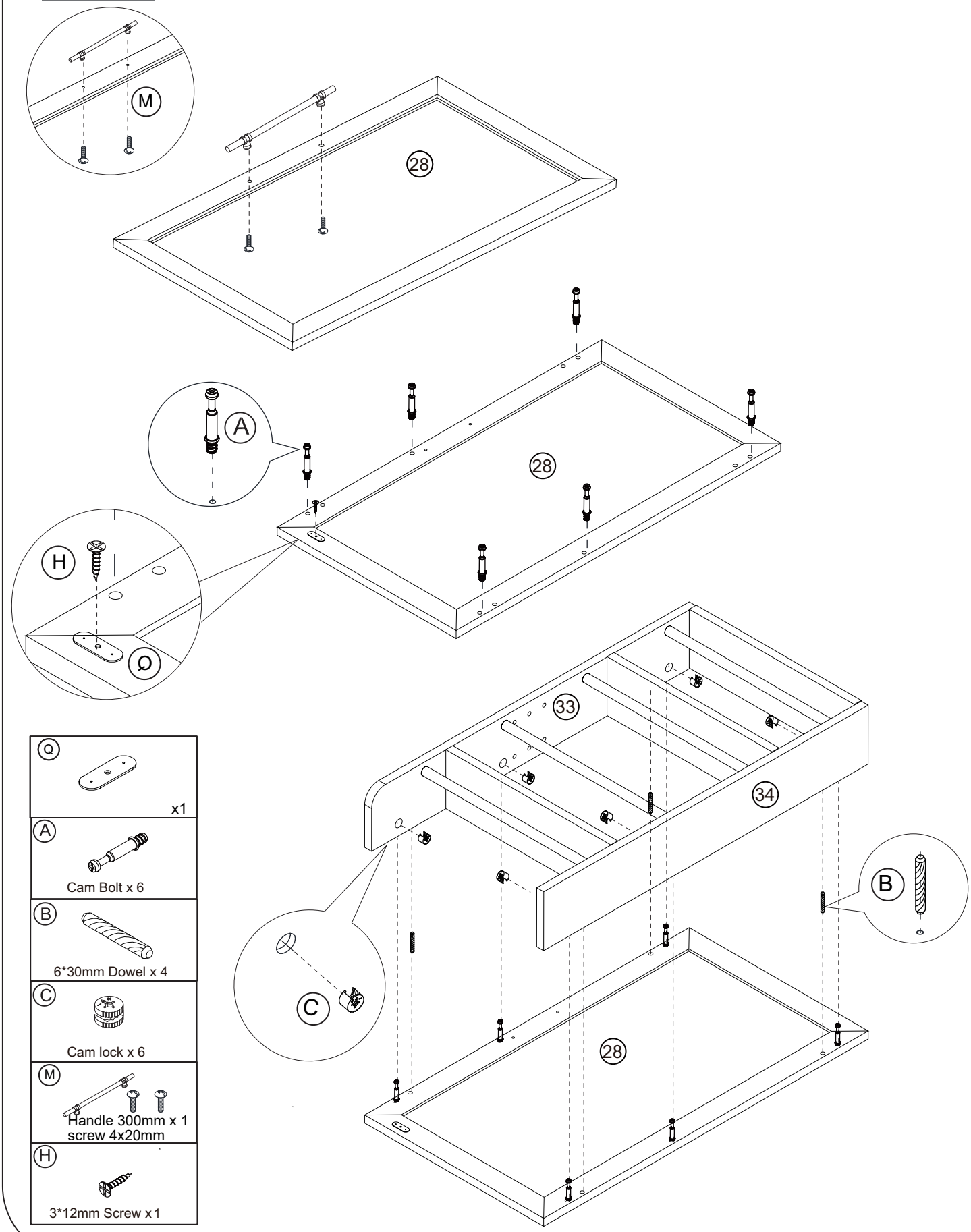

Q	x1
A	Cam Bolt x 6
B	6*30mm Dowel x 4
C	Cam lock x 6
M	Handle 300mm x 1 screw 4x20mm
H	3*12mm Screw x 1

Assembly Instructions

Step **19**

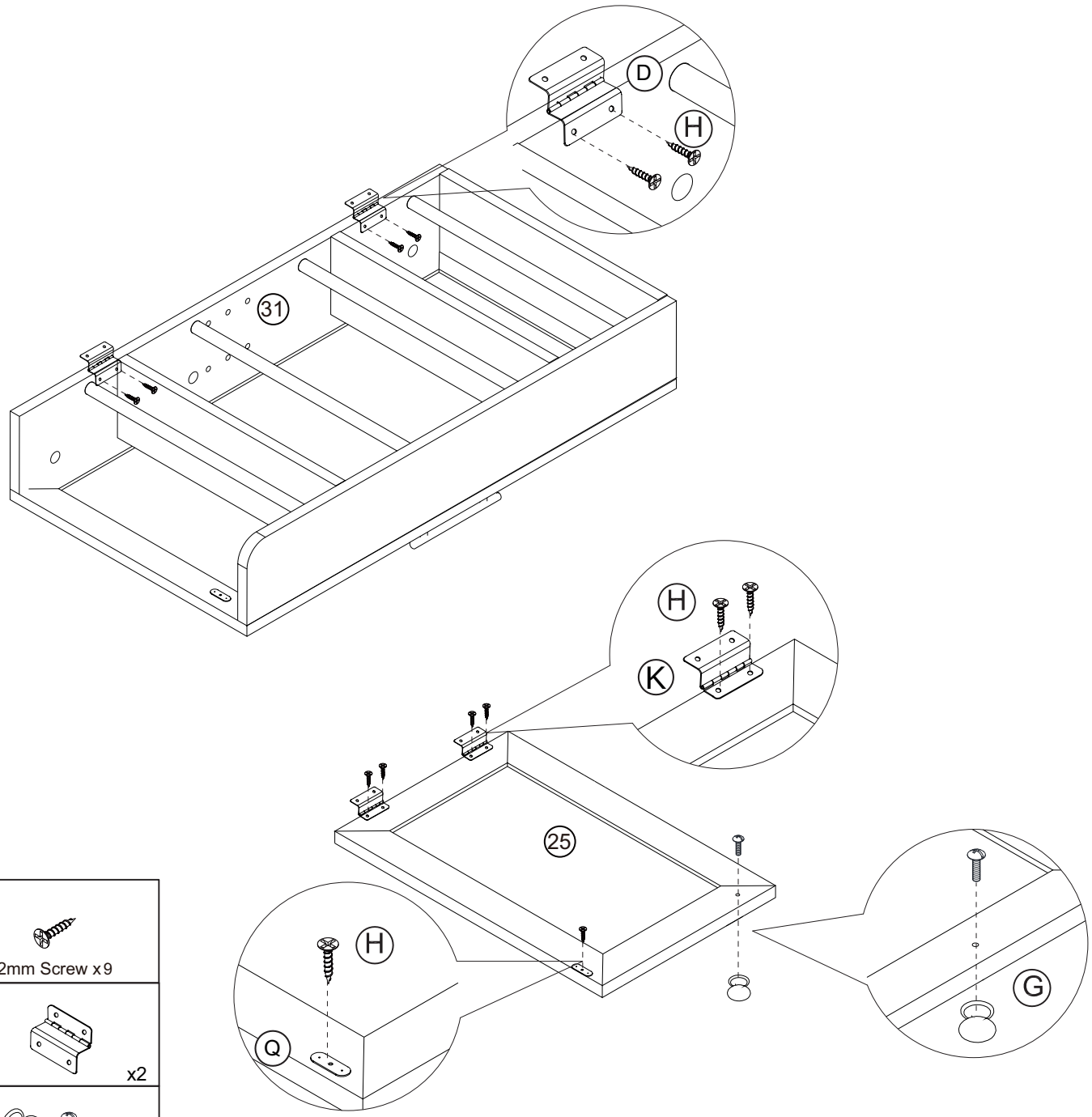

H	3*12mm Screw x 9
K	x2
G	Round handle x1 screw 4x20mm
D	x2
Q	x1

Assembly Instructions

Step **20**

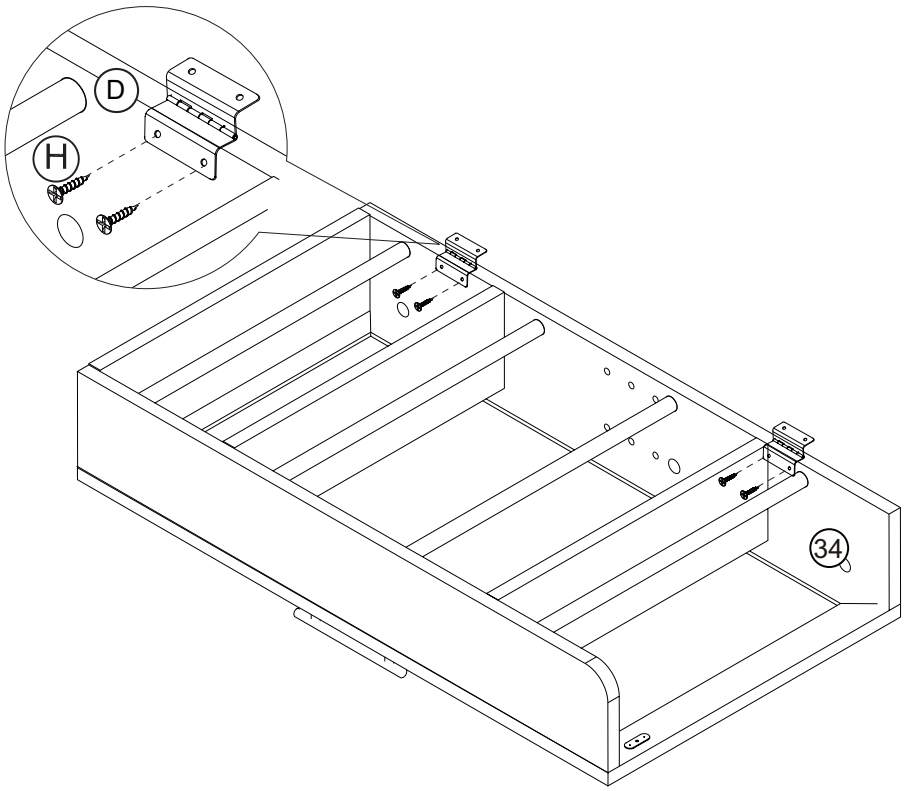

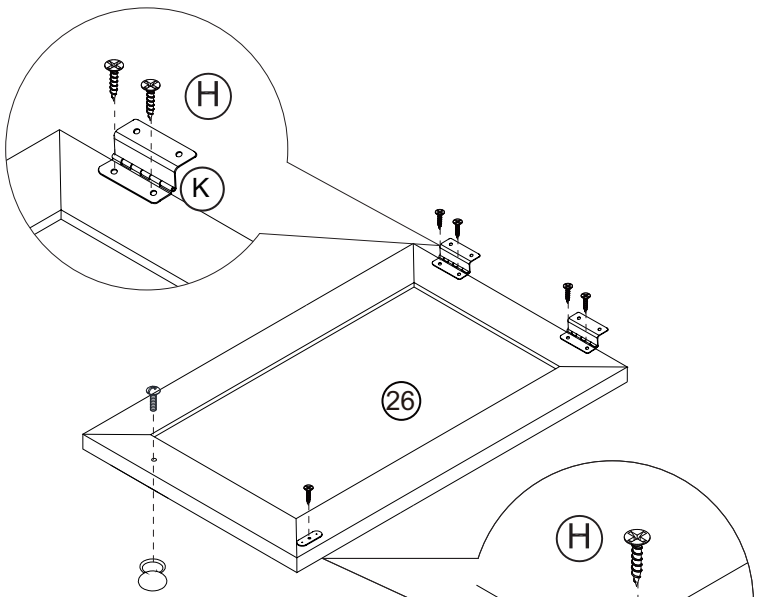

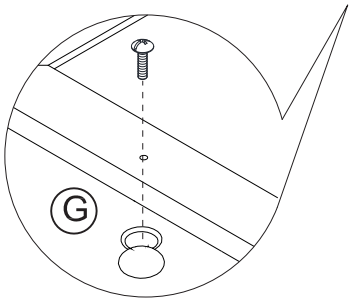

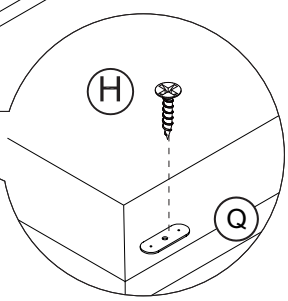

H	3*12mm Screw x 9
K	x2
G	Round handle x1 screw 4x20mm
D	x2
Q	x1

Assembly Instructions

Step **21**

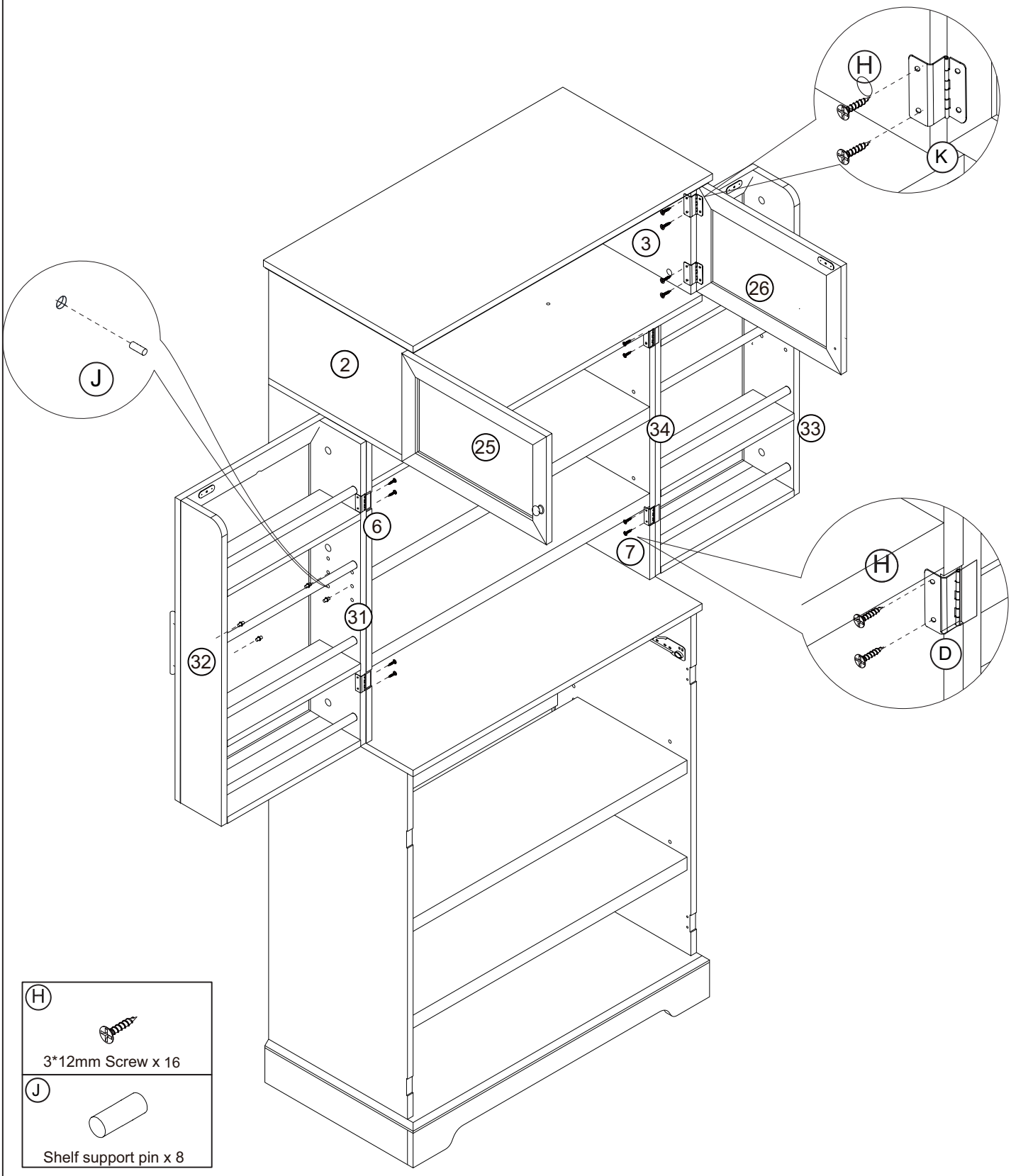

H

3*12mm Screw x 16

J

Shelf support pin x 8

Assembly Instructions

Step **22**

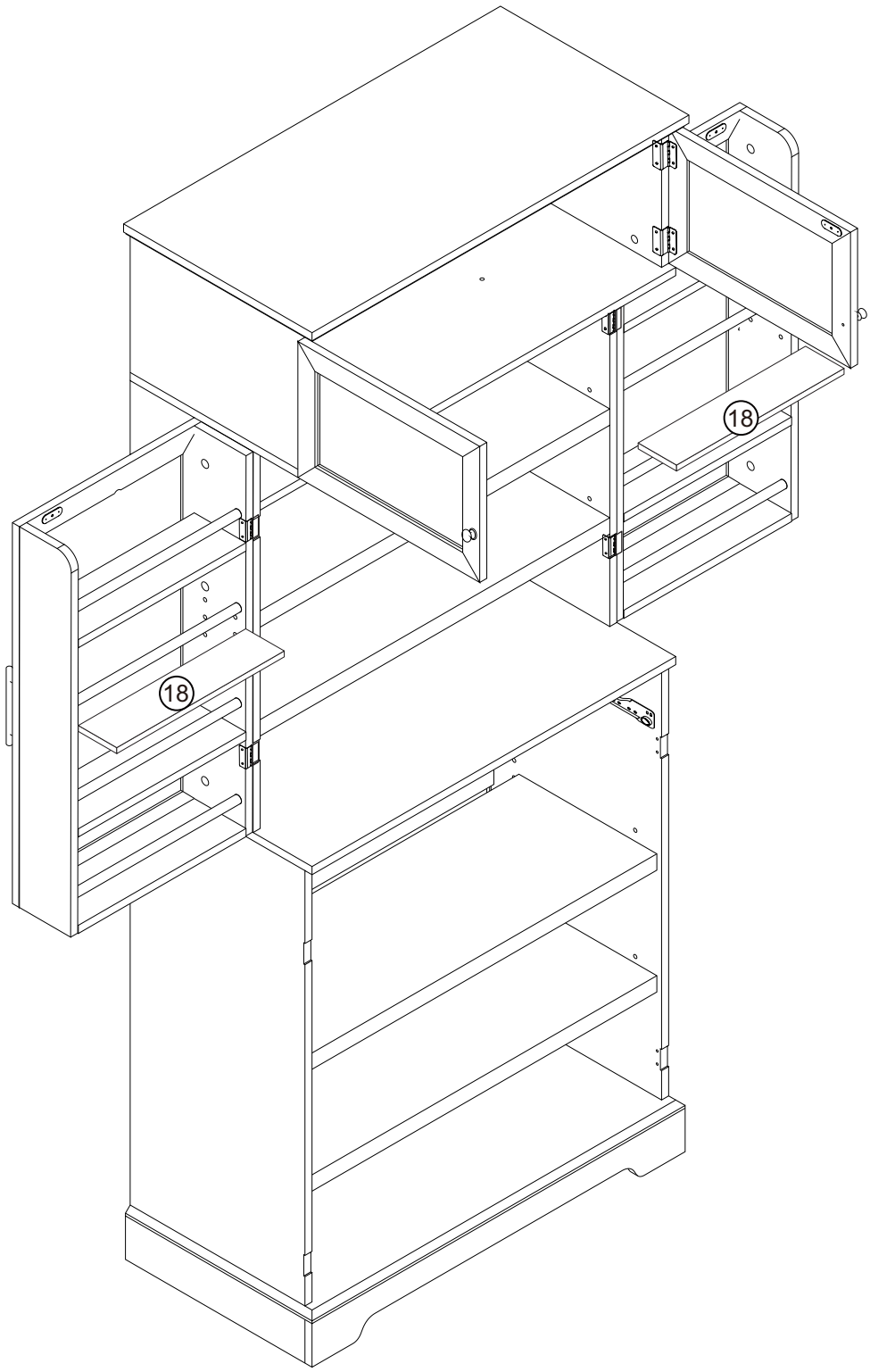

Assembly Instructions

Step **23**

The thin plate needs to be fully inserted into the groove. If the insertion is not smooth, you can try pressing from the front or the back to make adjustments until the thin plate is fully inserted into the groove.

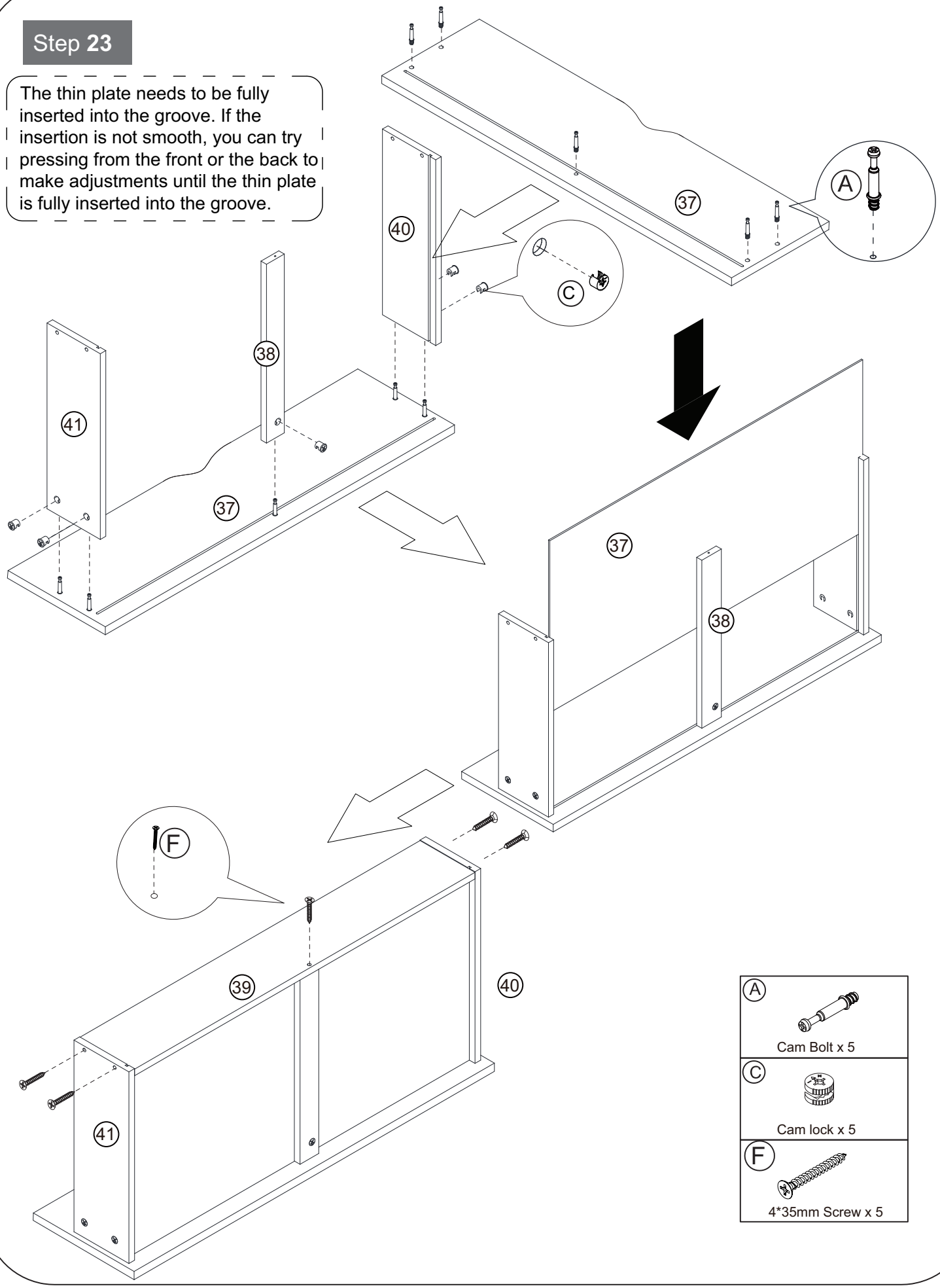

A	Cam Bolt x 5
C	Cam lock x 5
F	4*35mm Screw x 5

Assembly Instructions

Step **24**

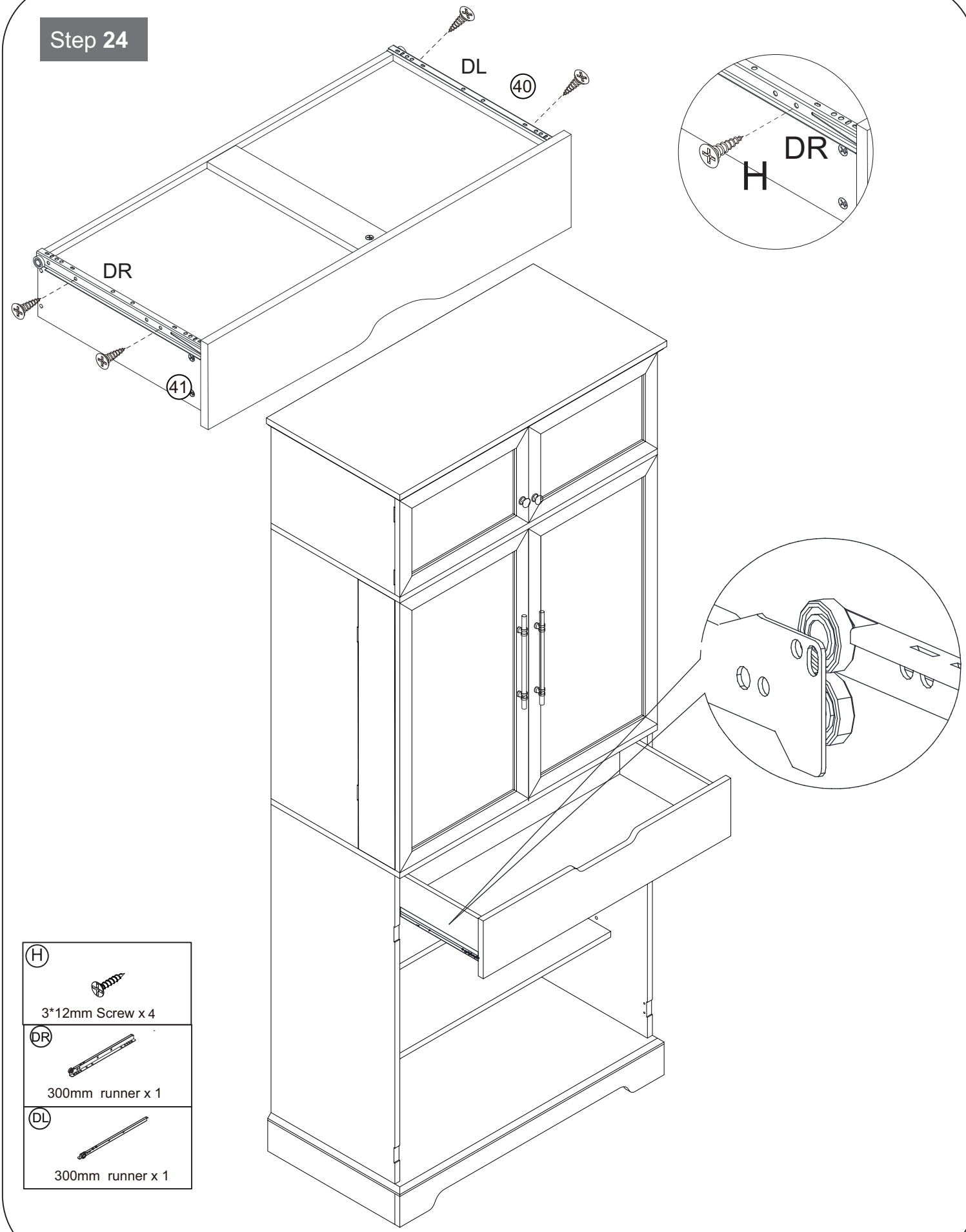

(H)	3*12mm Screw x 4
(DR)	300mm runner x 1
(DL)	300mm runner x 1

Assembly Instructions

Step **25**

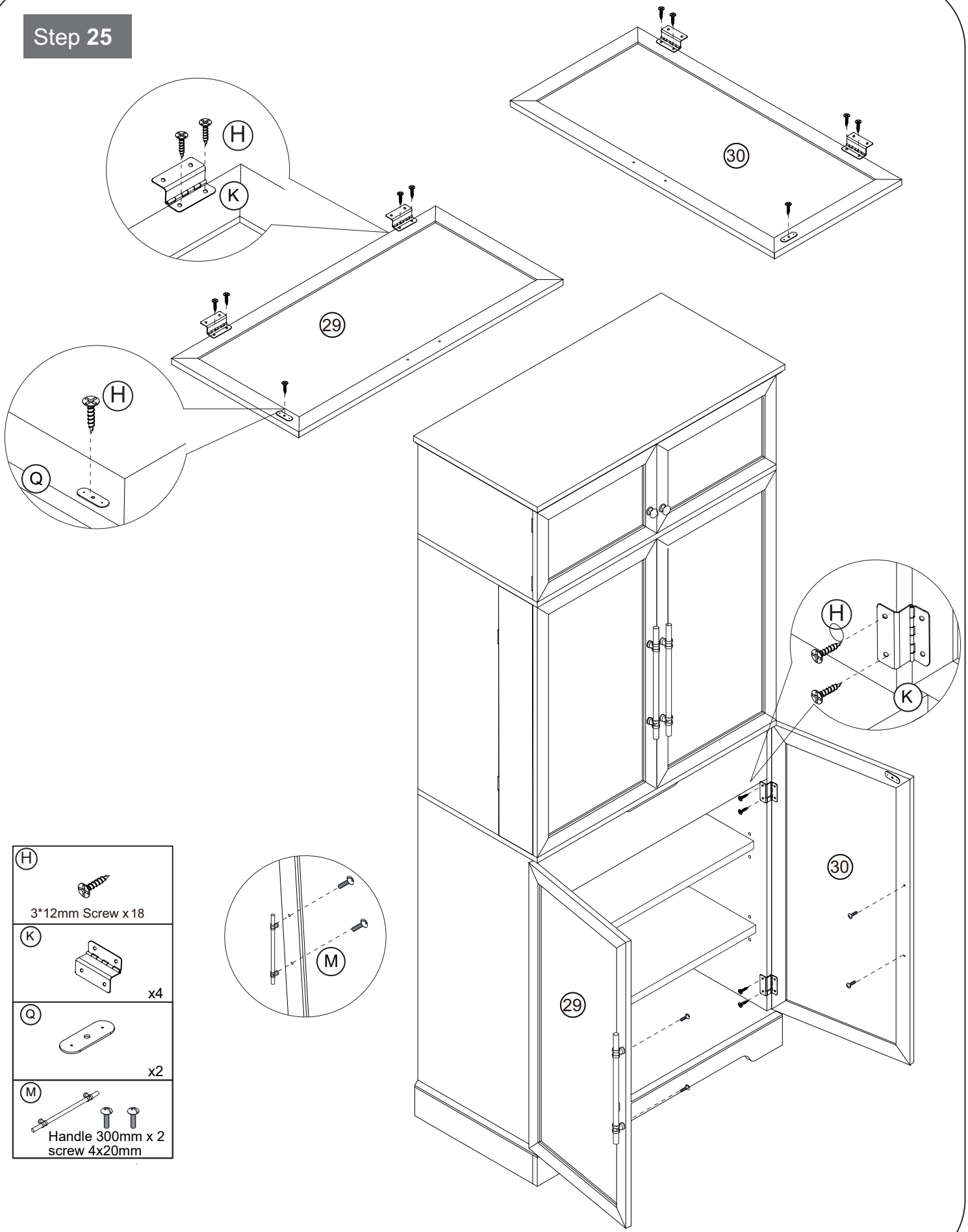

H	3*12mm Screw x 18
K	x4
Q	x2
M	Handle 300mm x 2 screw 4x20mm

Assembly Instructions

Step **26**

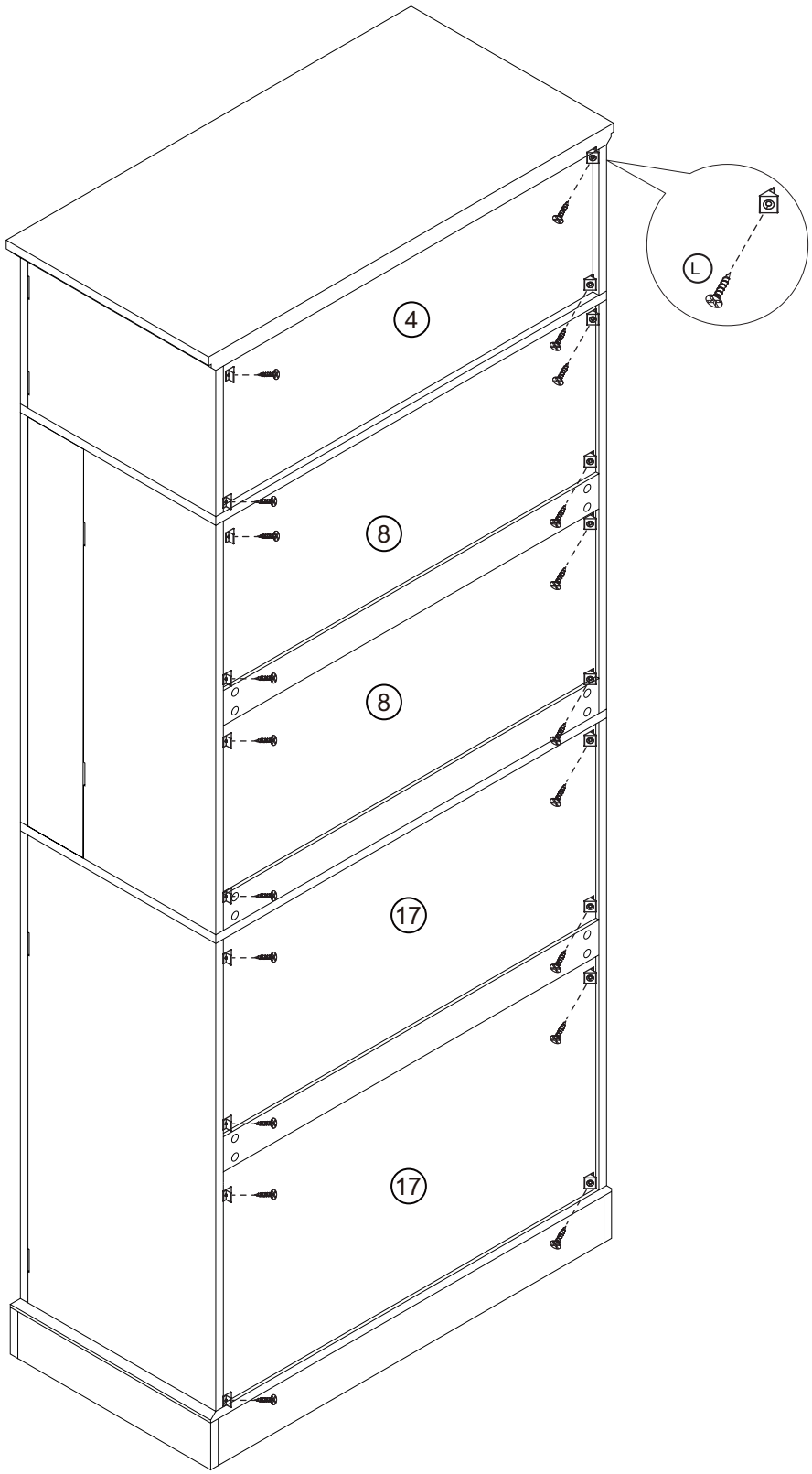

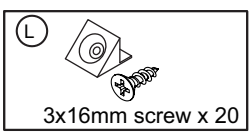

Assembly Instructions

Step **27**

