Shelf

Product ID. 7XEDY

Scan for Support
support@garvee.com

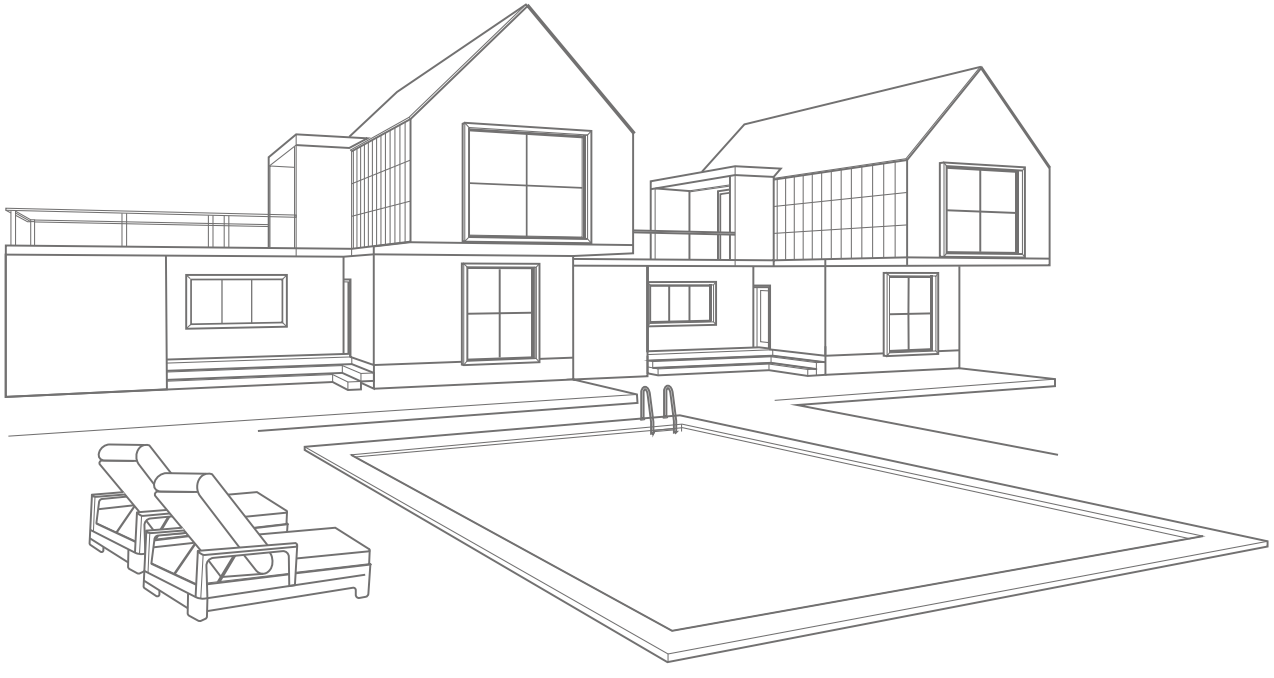

GARVEE.com

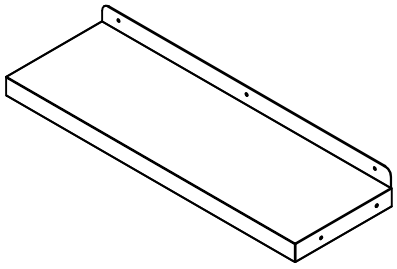

A*1

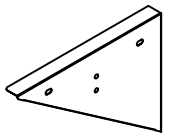

B*2



C*7



D*4



E*4



F*4



G*4



H*4

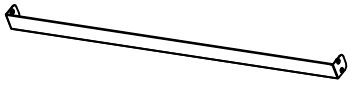

I*1



J*5

❶

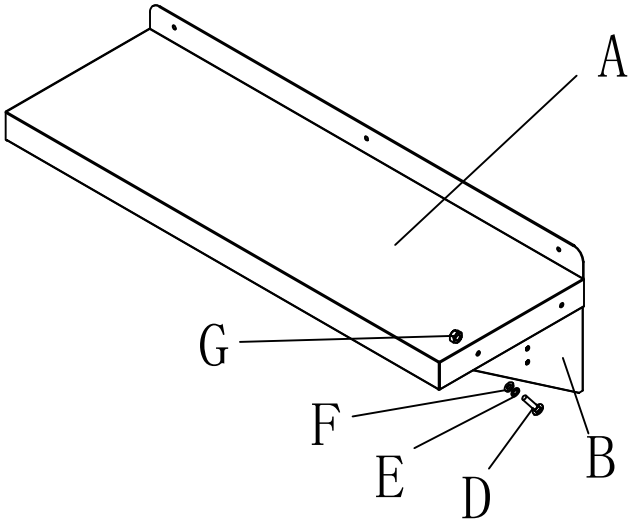

❷

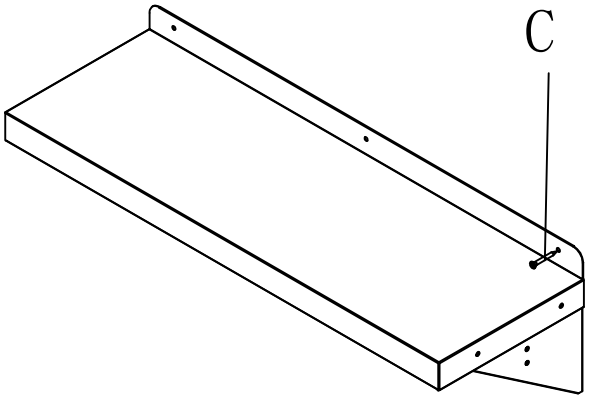

❸

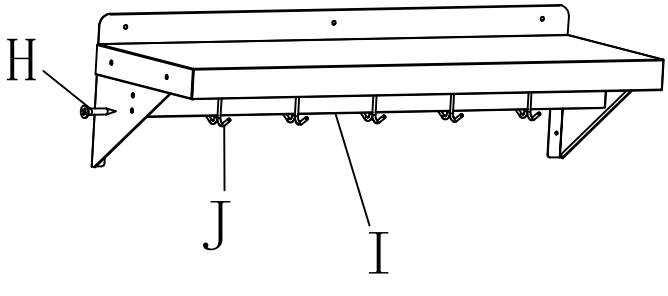

❹

