FORIOUS

Specifications

Single Hole Bathroom Faucet with Touchless Soap Dispenser

Models: WB-0302M

Faucet Dimensions

Overall Height: 8.58"
Spout Height: 3.54"

Features

- Brass Body
- Flow Rate: 1.2GPM max at 60psi
- Ceramic and Copper Cartridges
- 31.5" Stainless Steel Braided Waterlines
- NEOPERL Aerator
- Removable Aerator
- Infrared AI Smart-Chip Sensor
- Soap Container
- Automatic Foaming

Available Finishes

- Chrome
- Black

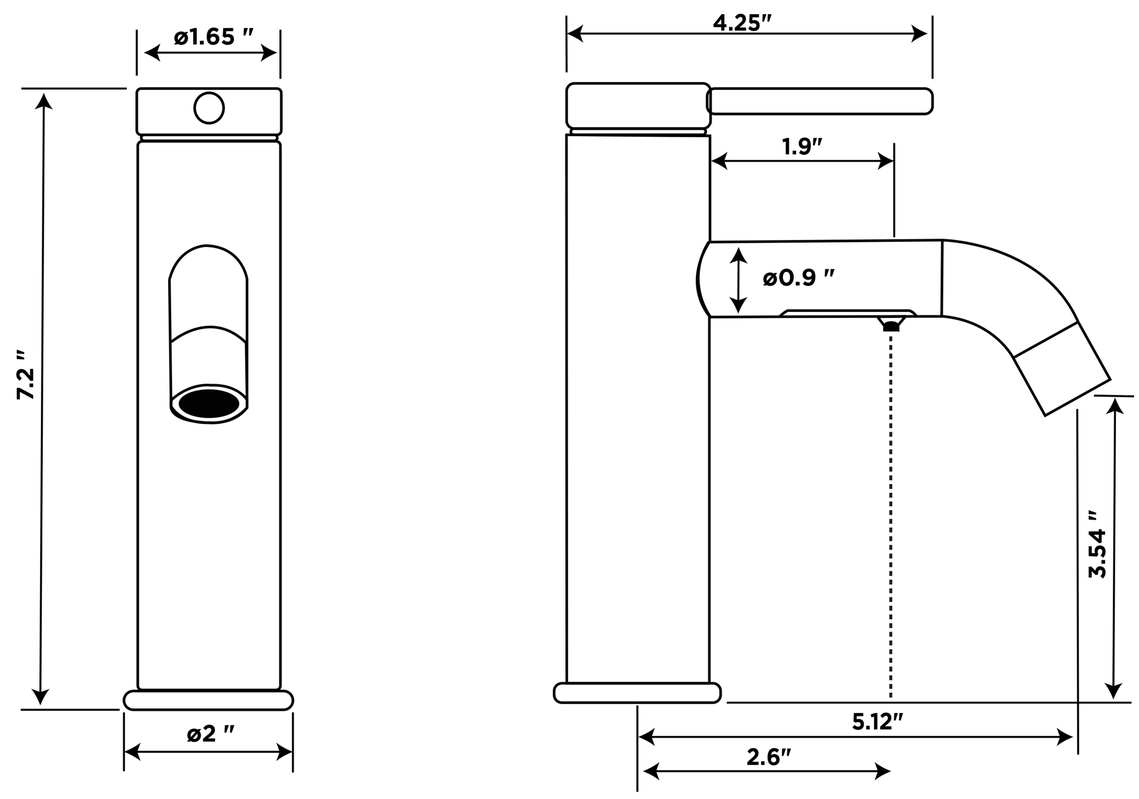

Warranty

FORIOUS Full Lifetime Warranty
Warranty against leaks,drips and finish defects to the orginal consumer purchaser

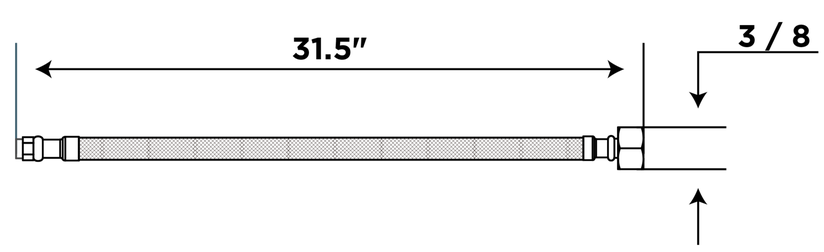

FORIOUS Customer Service

service@forious.com