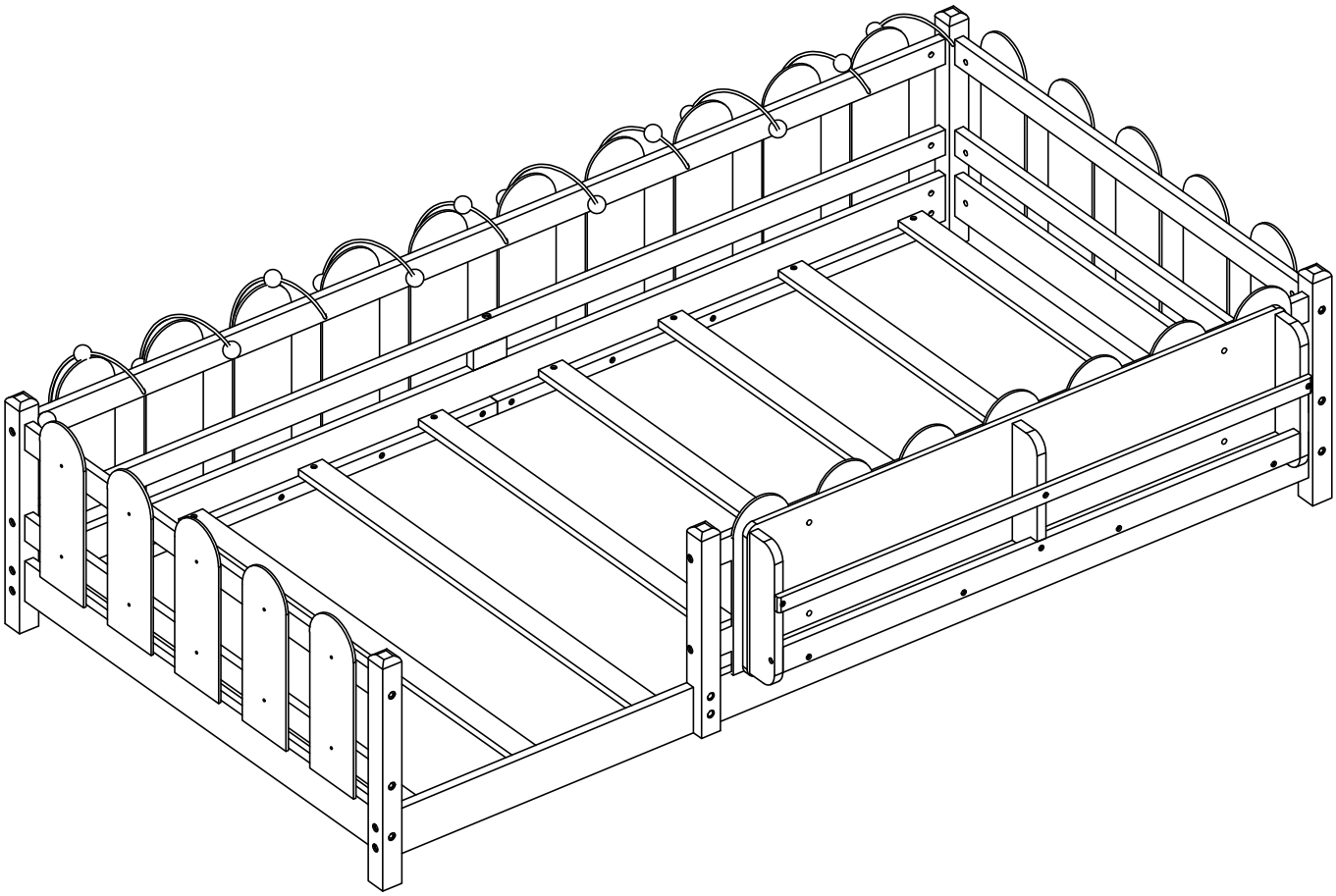
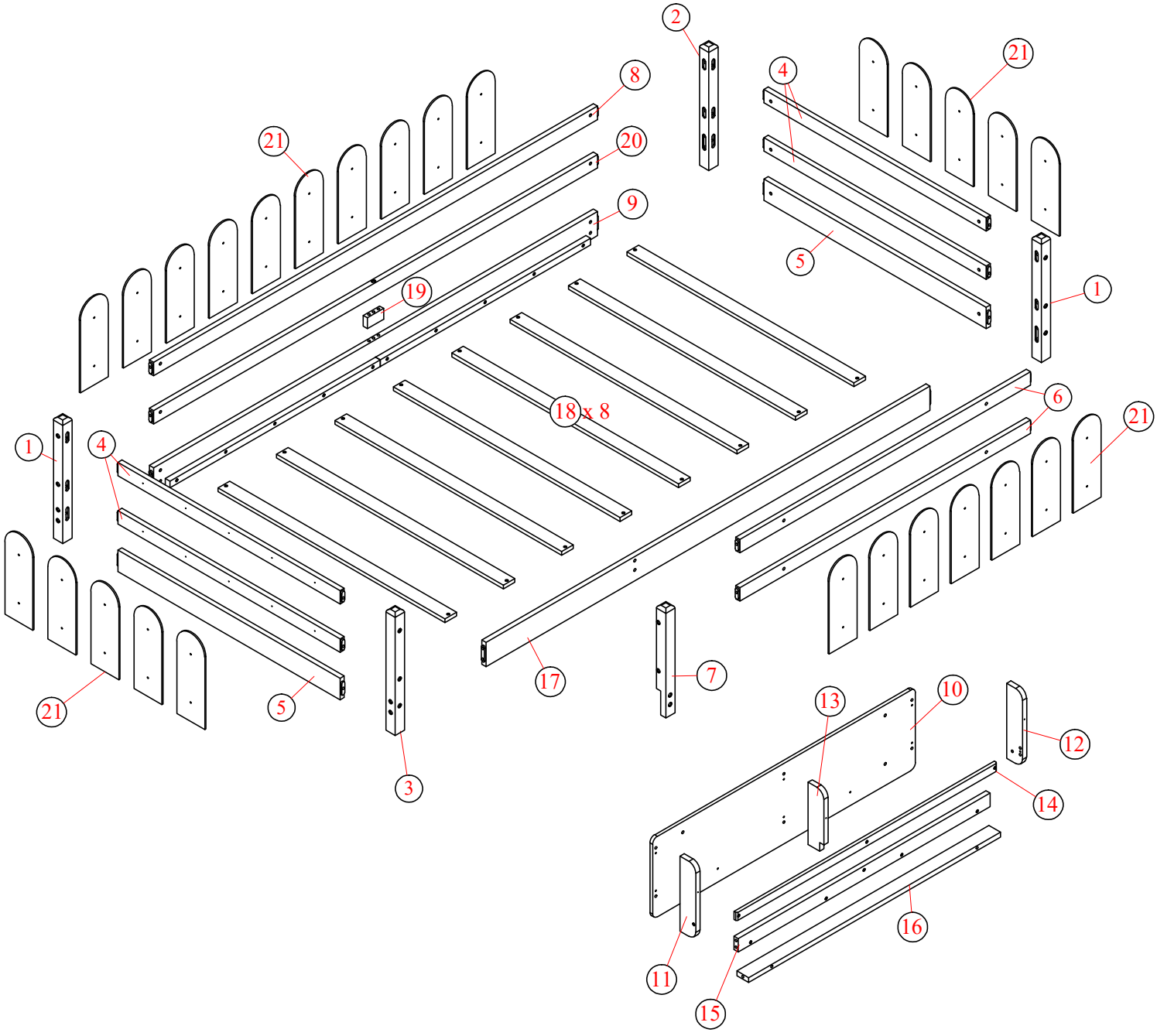
ASSEMBLY INSTRUCTION

SKU CODE (RH00100)
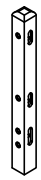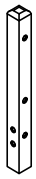
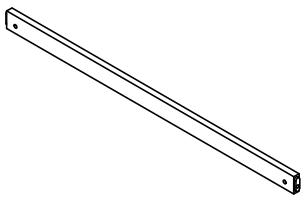
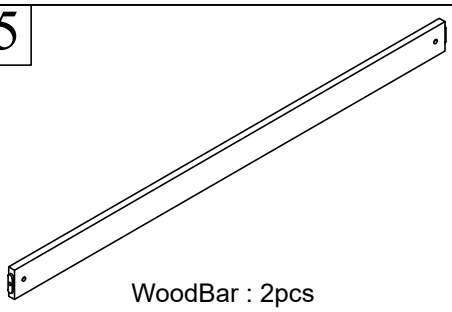
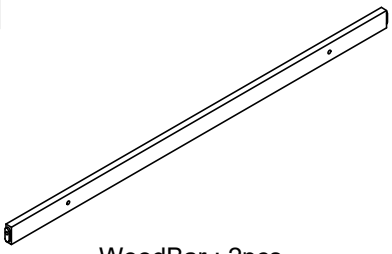
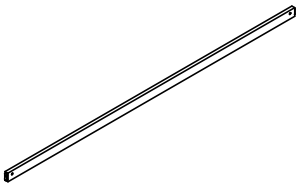
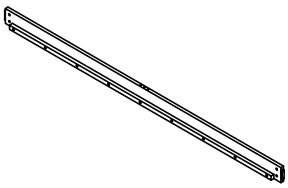
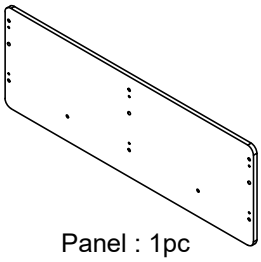
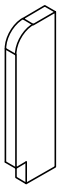
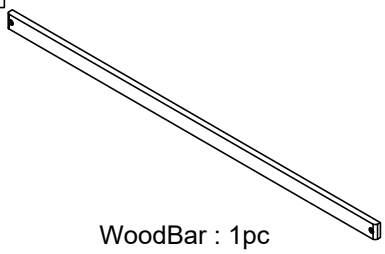
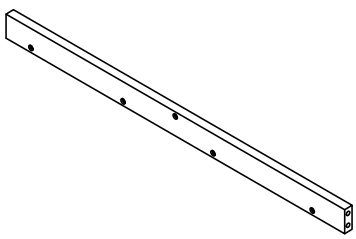
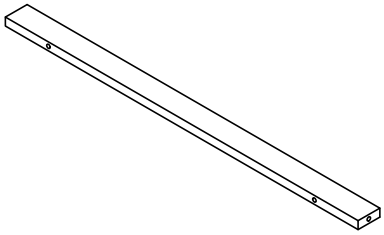
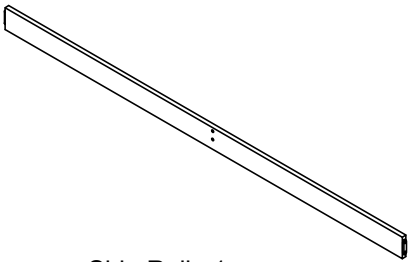


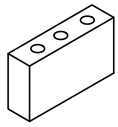
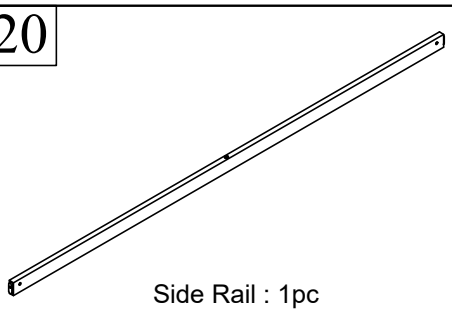
Bed type	Length	Width	Thickness
Twin Standard	75"	38"	6" max

Detail View

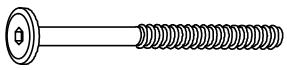
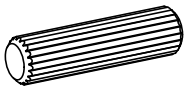


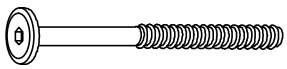
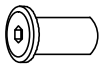
Part List (RH00100)

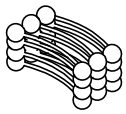
1  Leg : 2pcs	2  Leg : 1pc	3  Leg : 1pc
4  WoodBar : 4pcs	5  WoodBar : 2pcs	6  WoodBar : 2pcs
7  WoodBar : 1pc	8  WoodBar : 1pc	9  Side Rail : 1pc
10  Panel : 1pc	11  WoodBar : 1pc	12  WoodBar : 1pc
13  WoodBar : 1pc	14  WoodBar : 1pc	15  WoodBar : 1pc
16  WoodBar : 1pc	17  Side Rail : 1pc	18  Slats : 8pcs

19	20	21
		
WoodBar : 1pc	Side Rail : 1pc	Panel : 27pcs

Hardware List (RH00100)

A	B	C
		
Ø1/4" x 80mm	Ø8 x 30mm	Ø1/4" x 13mm
Hex-head bolt (28pcs)	Wood dowel (18pcs)	Horizontal-hole bolt (28pcs)

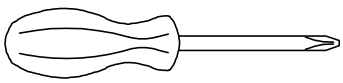
D	E	F
		
Ø1/4" x 100mm	Ø1/4" x 30mm	Ø1/4" x 15mm
Hex-head bolt (1pc)	Hex-head bolt (6pcs)	Sleever nuts (2pcs)

G	H	I
		
#4 x 30mm	#3.5 x 15mm	
Screw (34pcs)	Screw (54pcs)	Led lights (1pc)

K

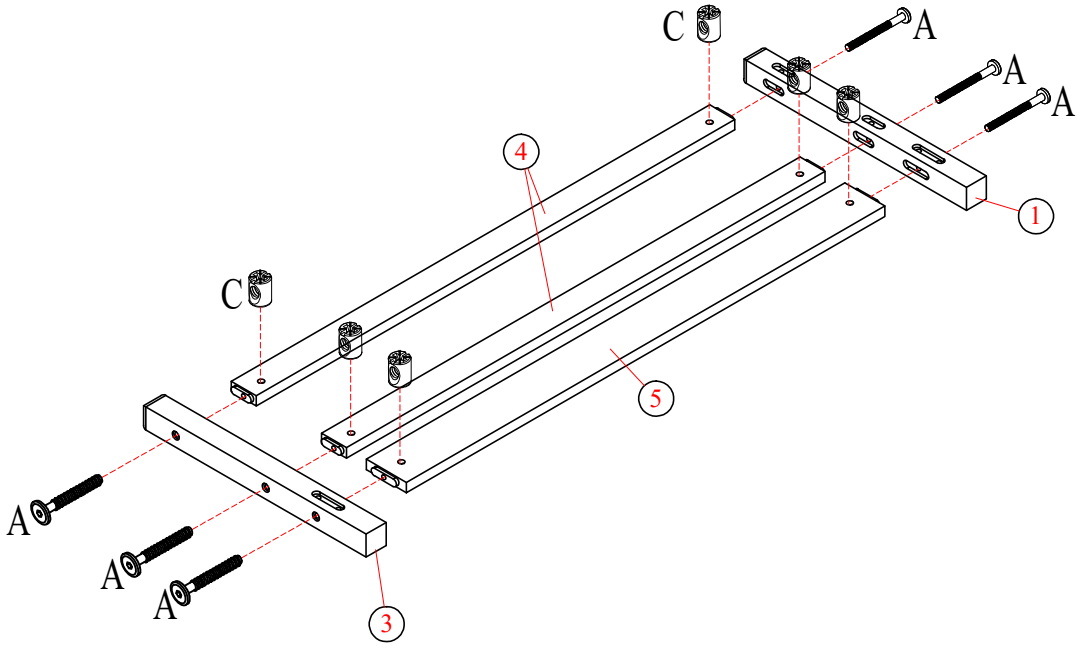
K4mm
Allen key (1pc)

ASSEMBLY TOOLS REQUIRED (NOT INCLUDED)



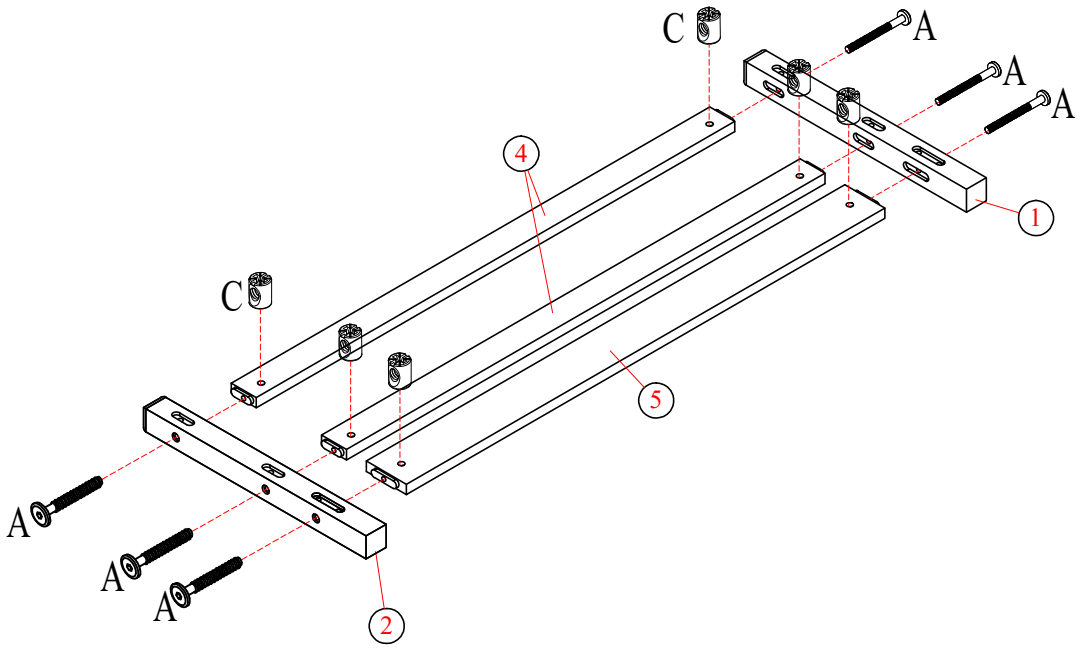
STEP- 1

A	C
6PCS	6PCS



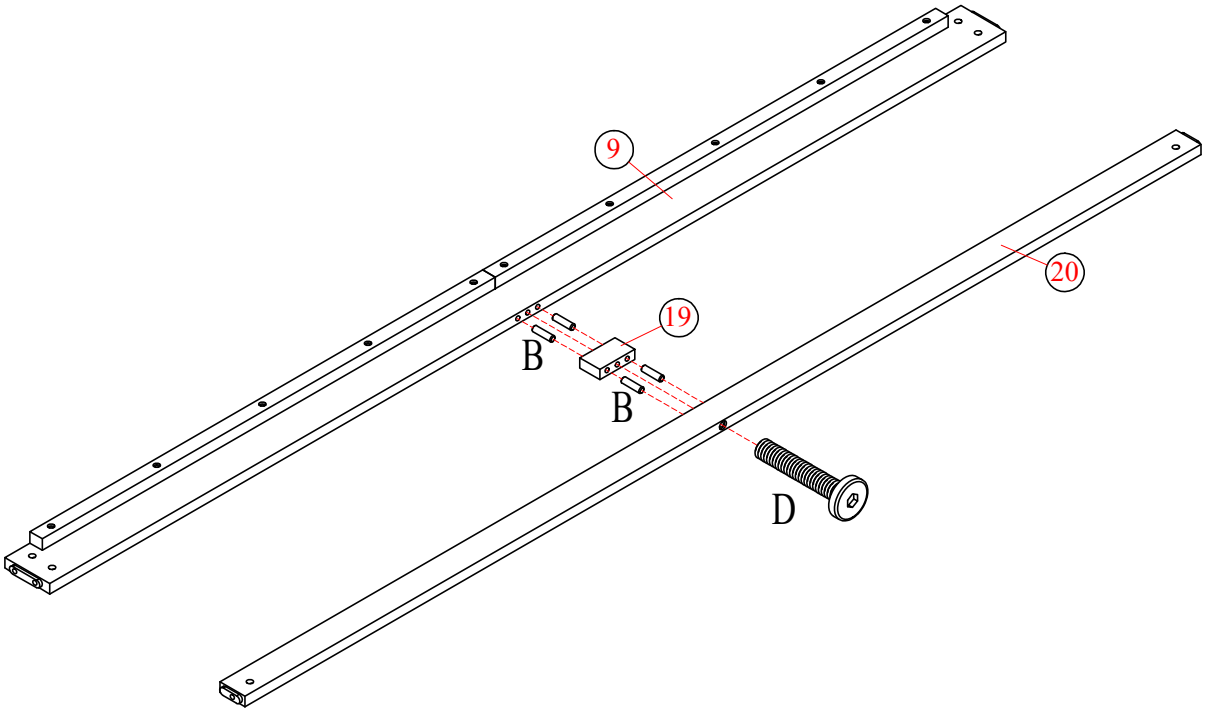
STEP- 2

A	C
6PCS	6PCS



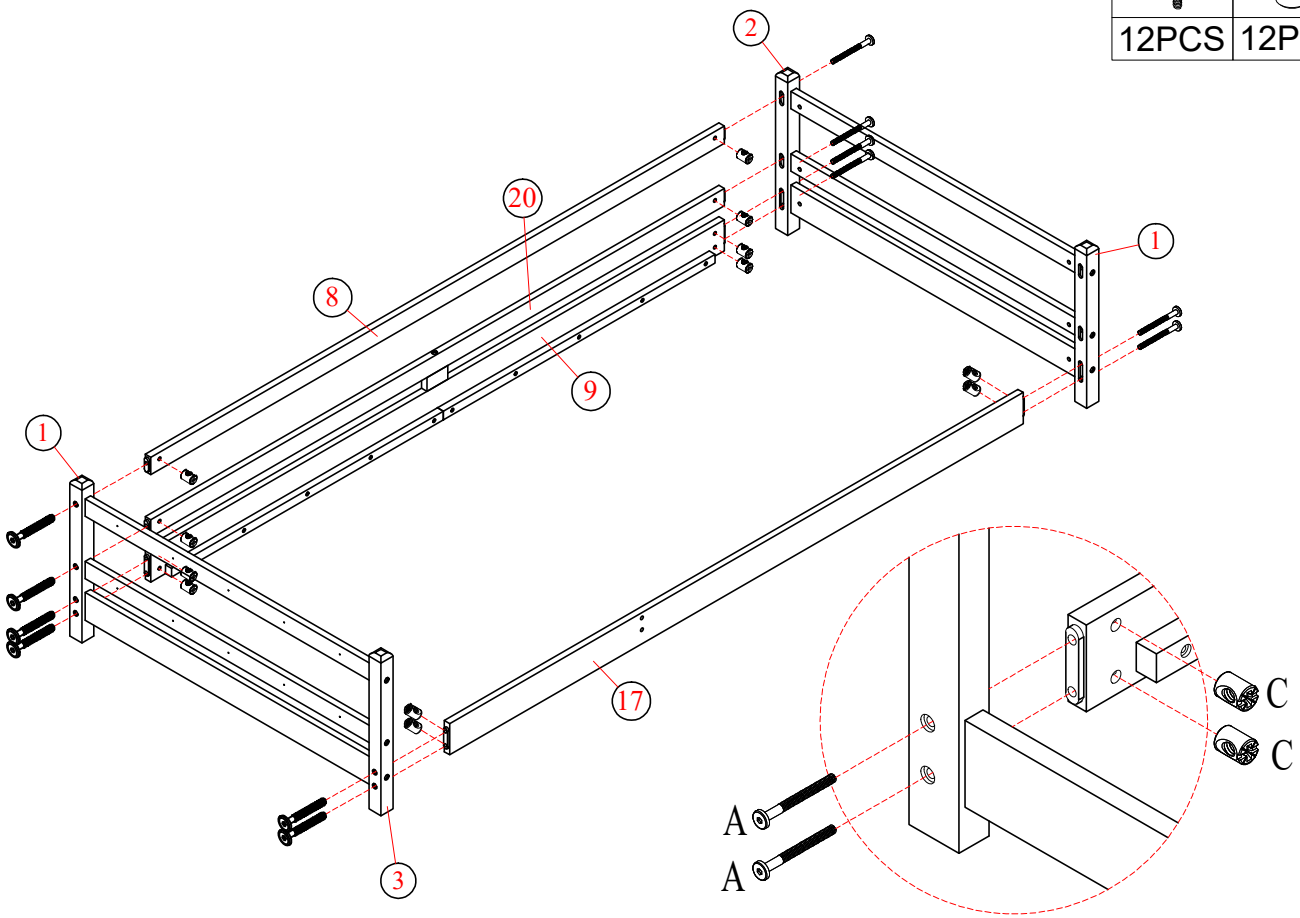
STEP- 3

B	D
4PCS	1PC



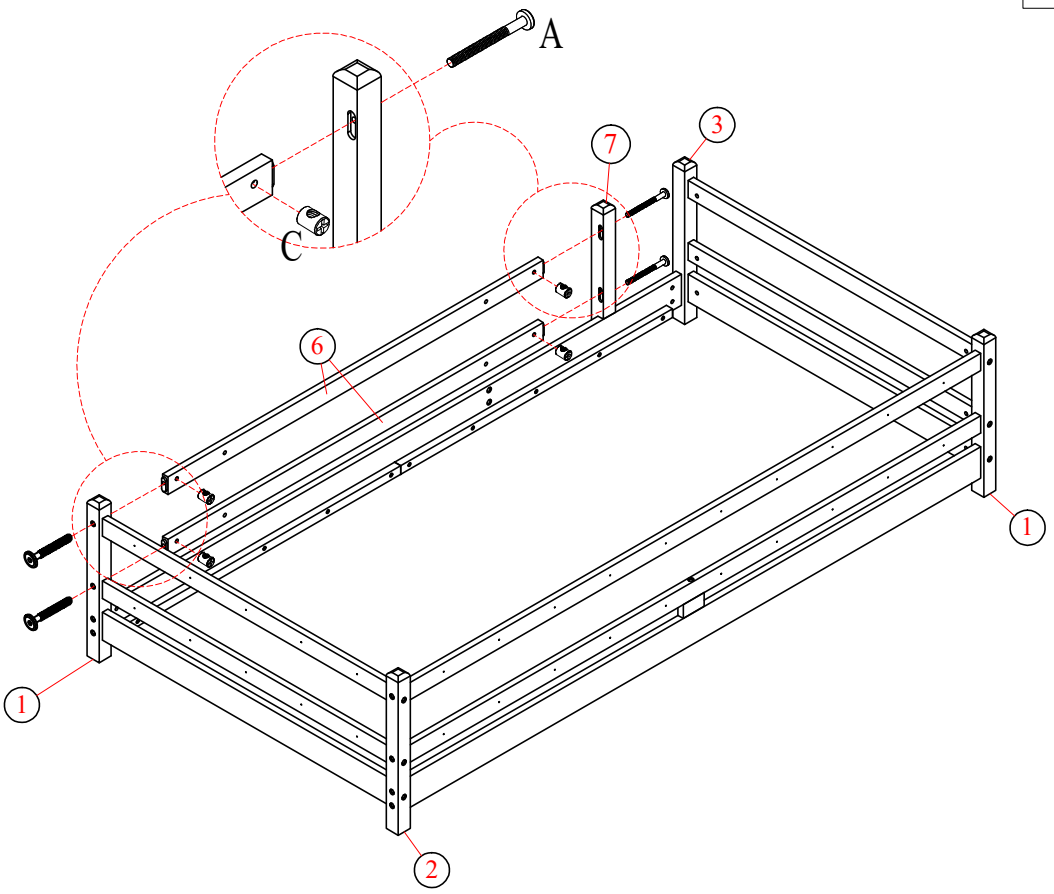
STEP- 4

A	C
12PCS	12PCS



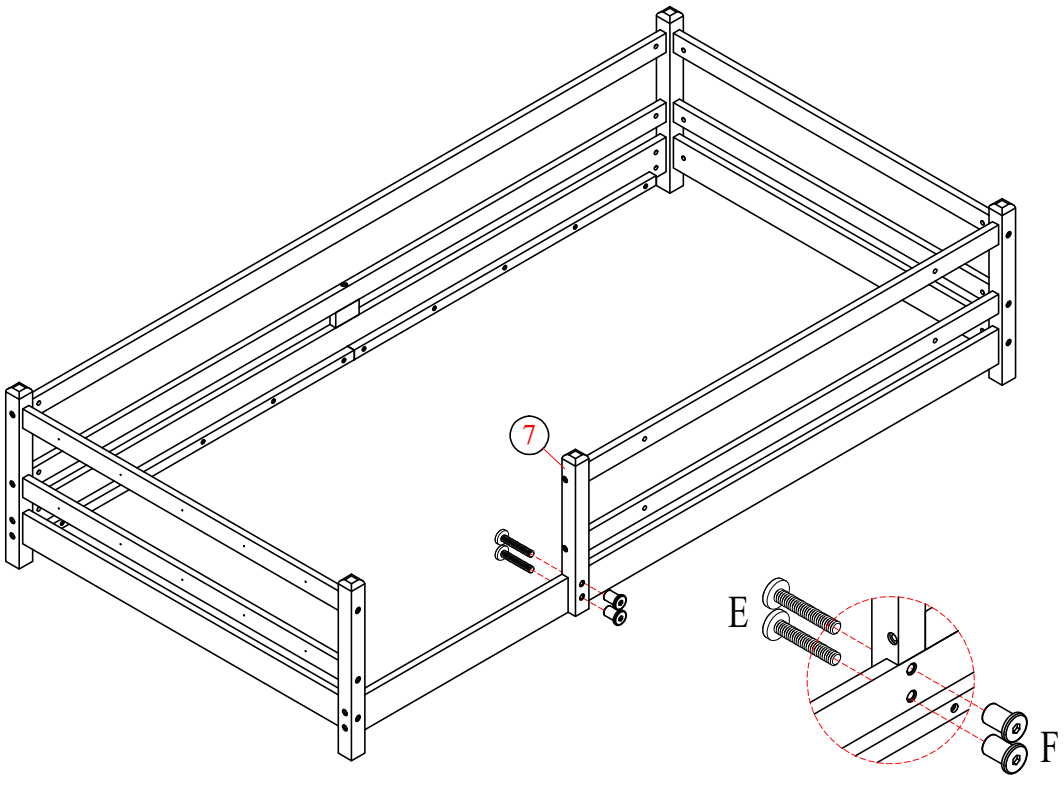
STEP- 5

A	C
4PCS	4PCS



STEP- 6

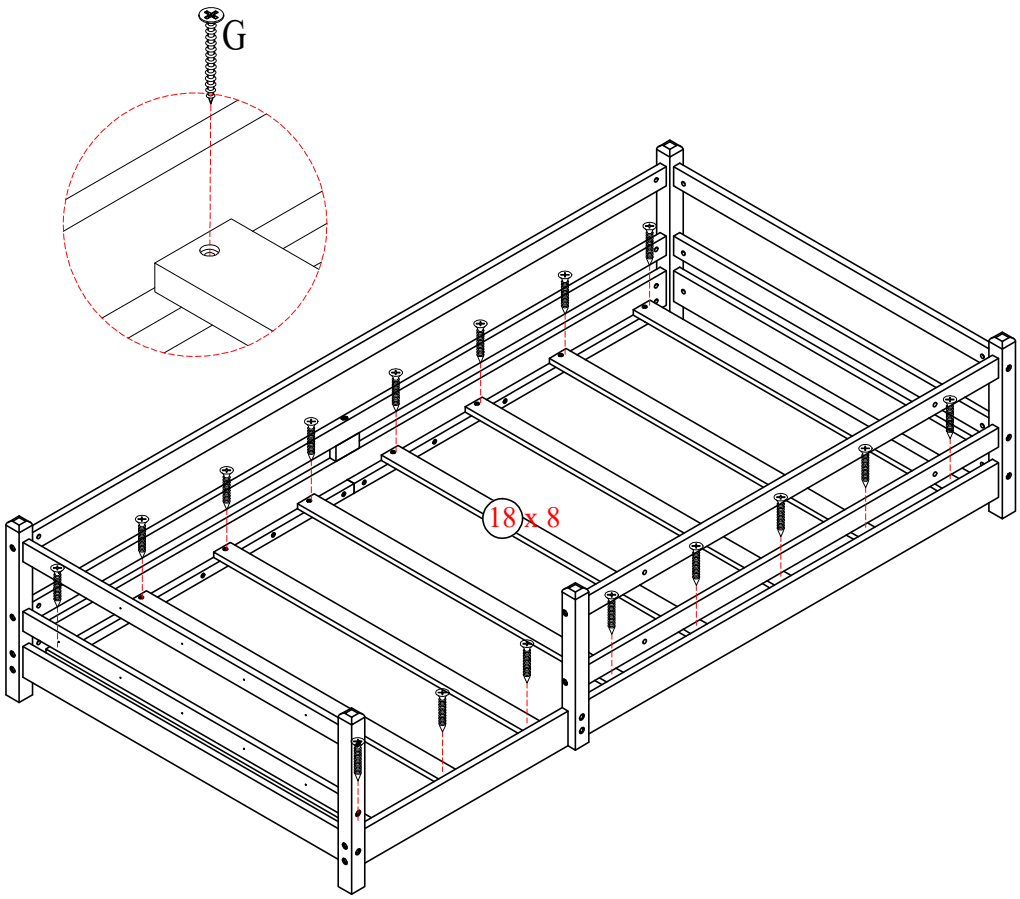
F	E
2PCS	2PCS



STEP- 7

G

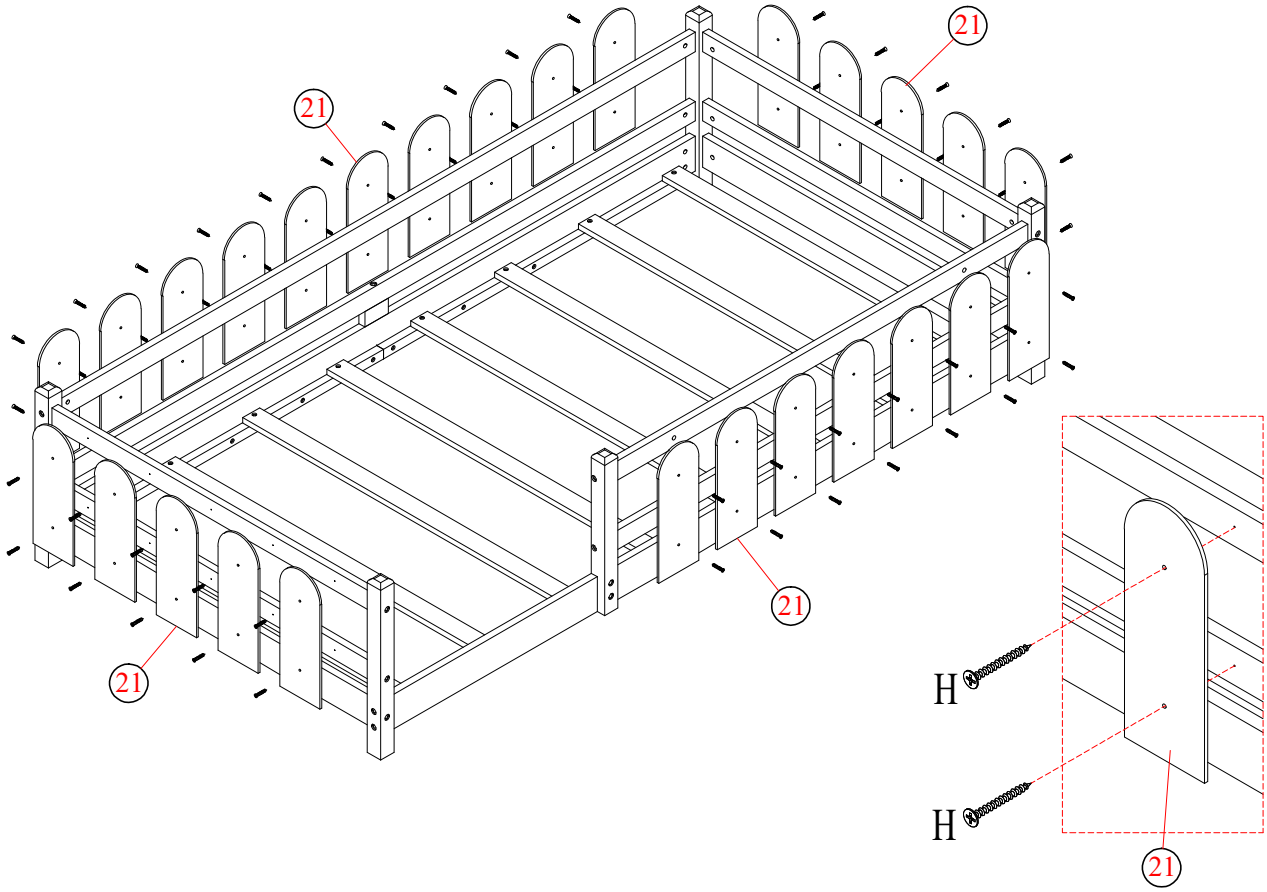
16PCS



STEP- 8

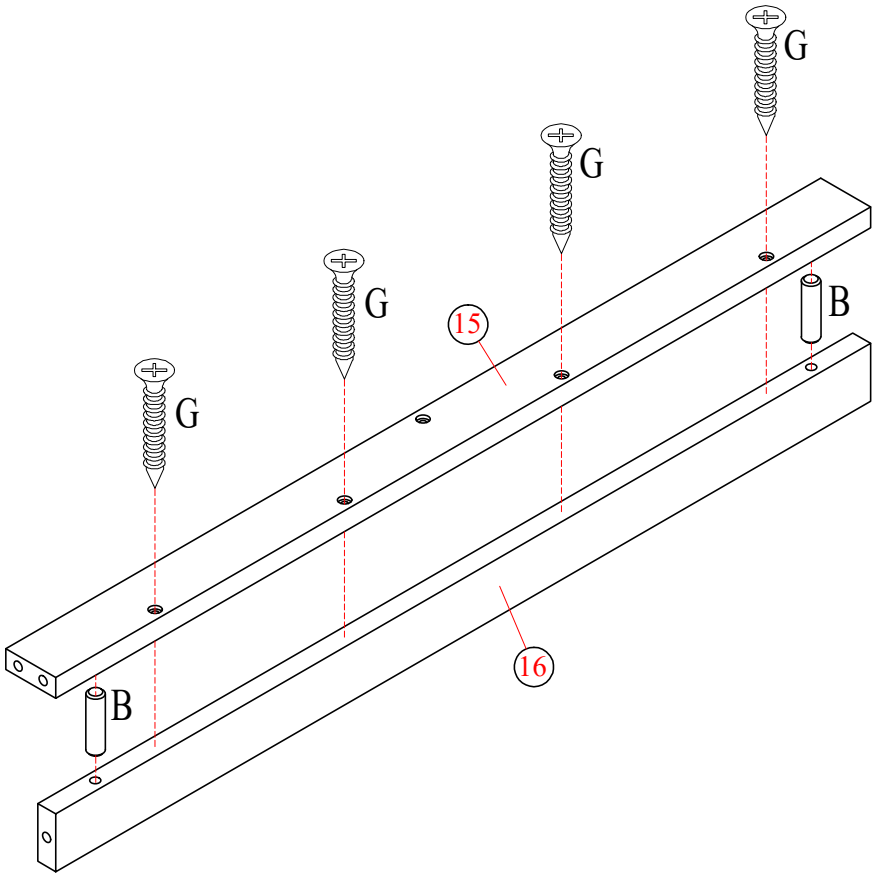
H

54PCS



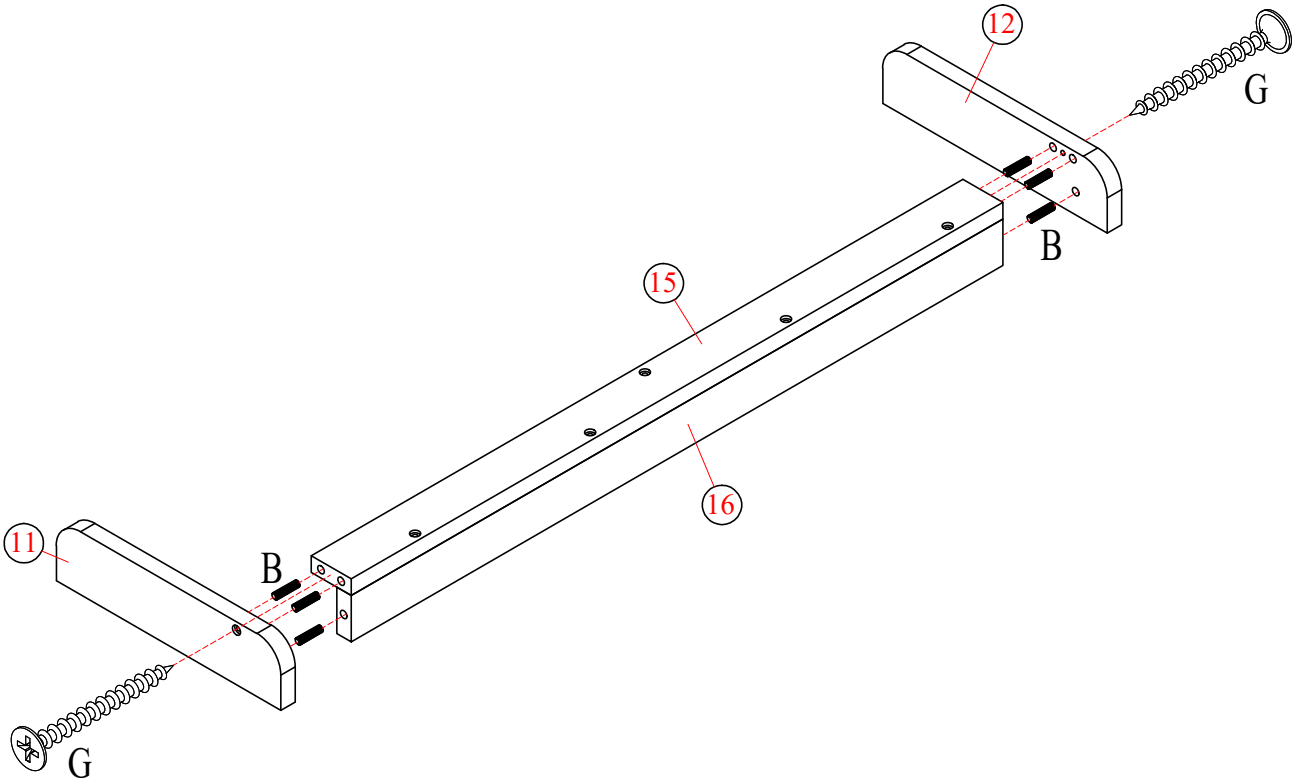
STEP- 9

B	G
2PCS	4PCS



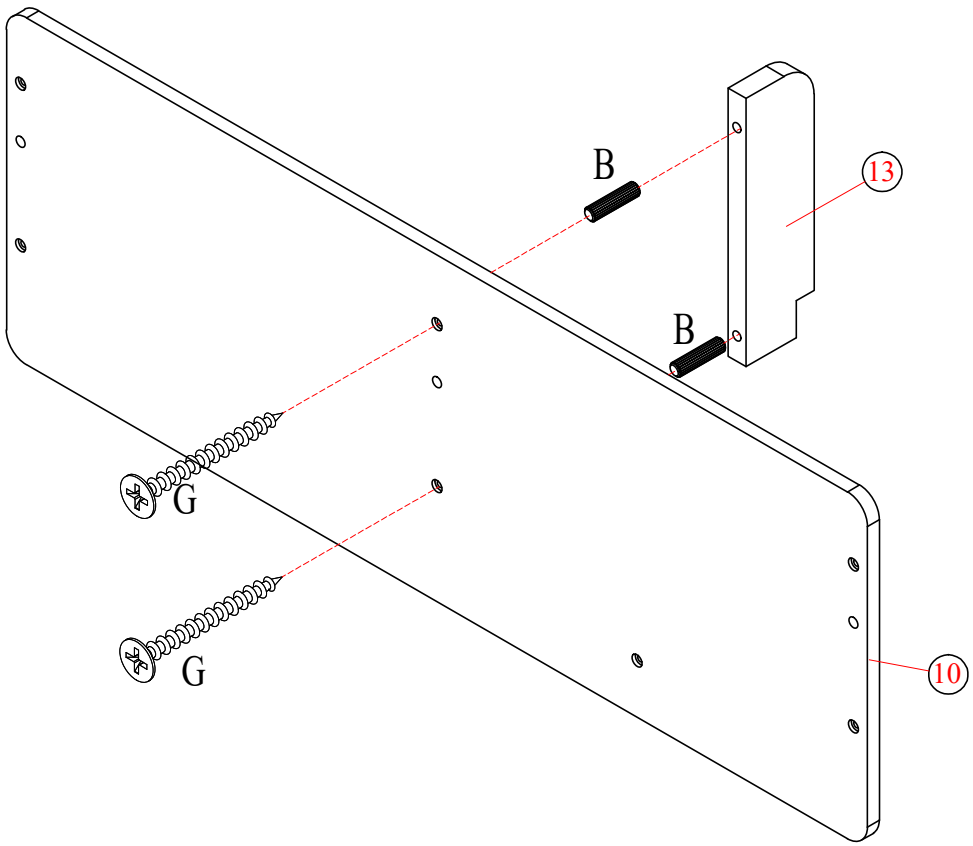
STEP- 10

B	G
6PCS	2PCS



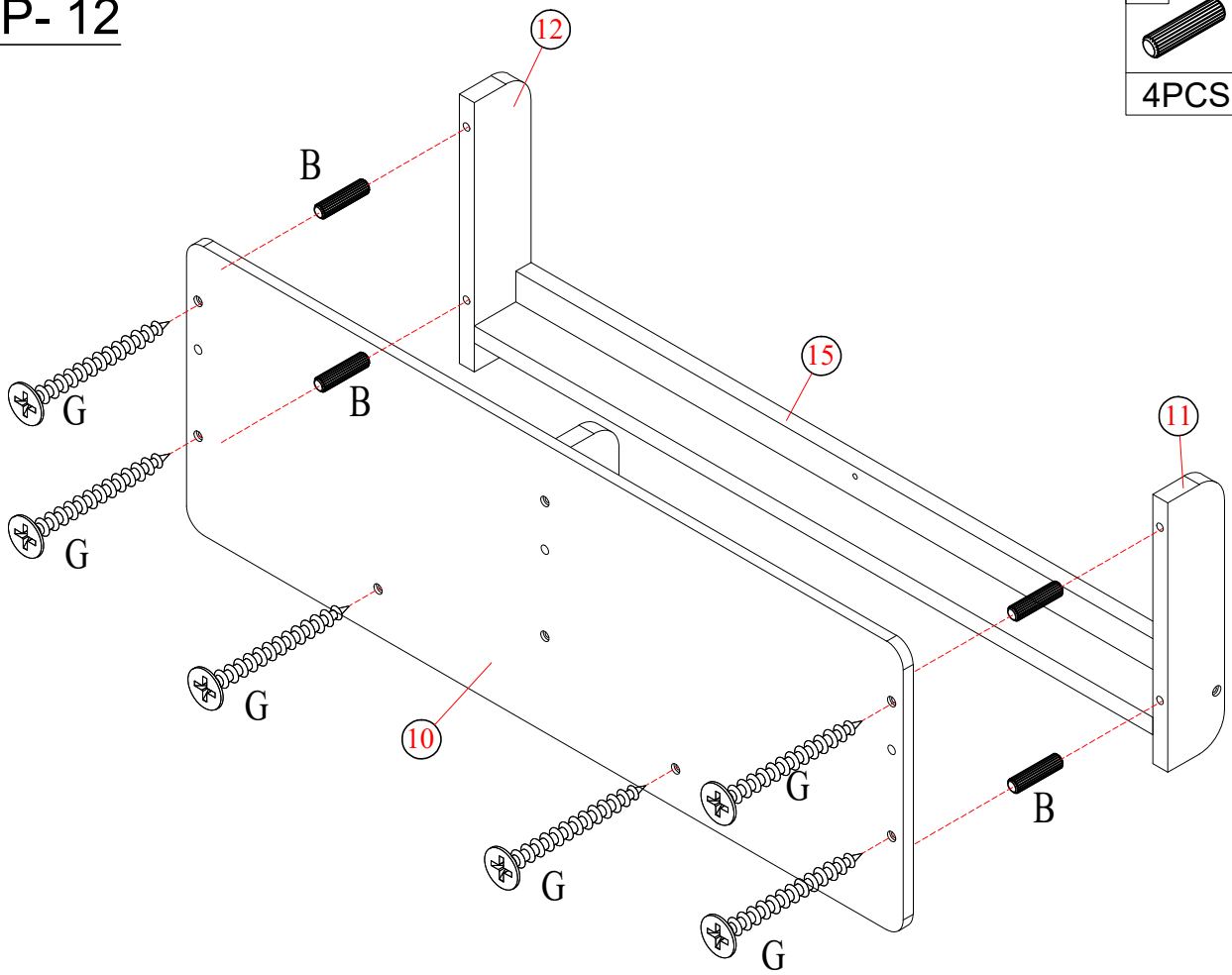
STEP- 11

B	G
2PCS	2PCS



STEP- 12

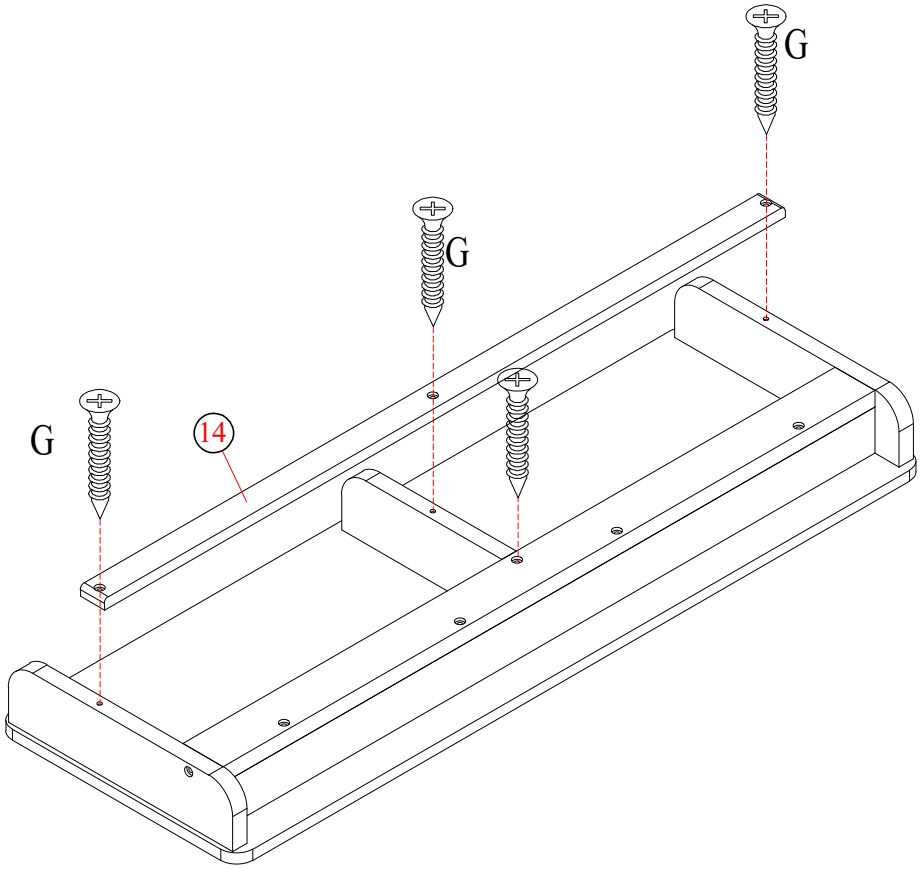
B	G
4PCS	6PCS



STEP- 13

G

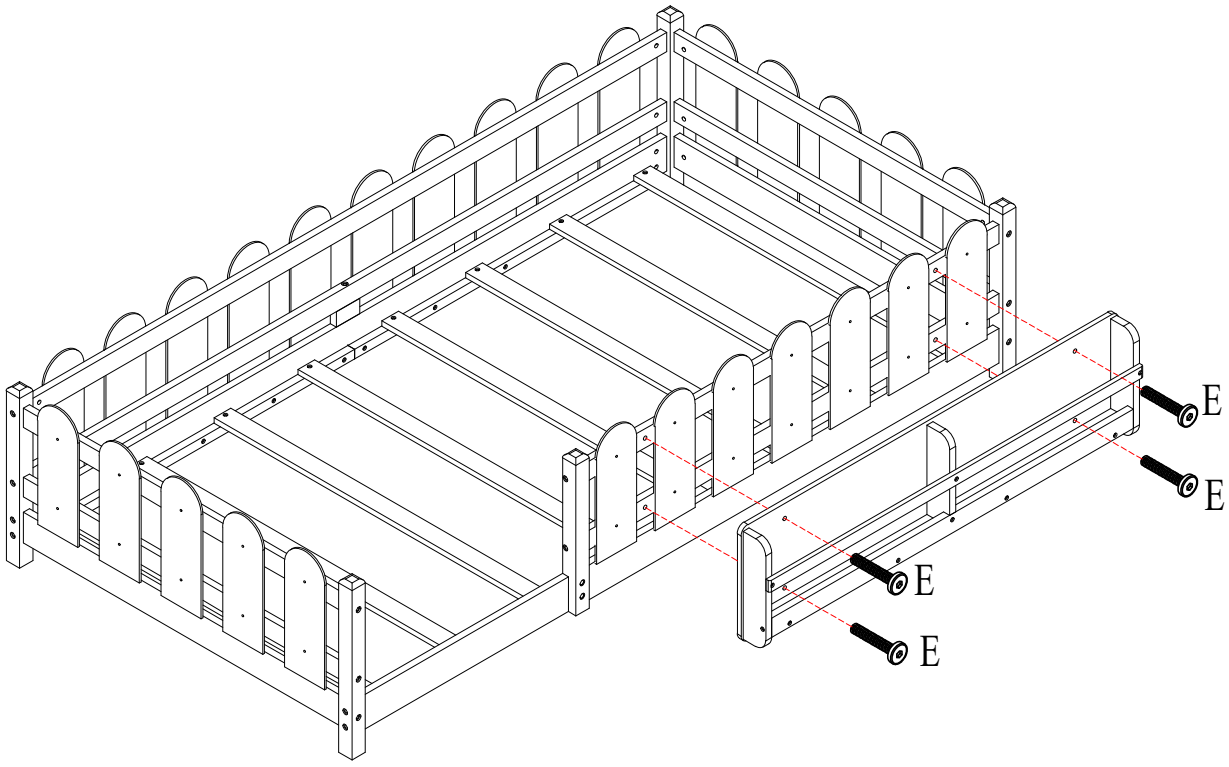
4PCS



STEP- 14

E

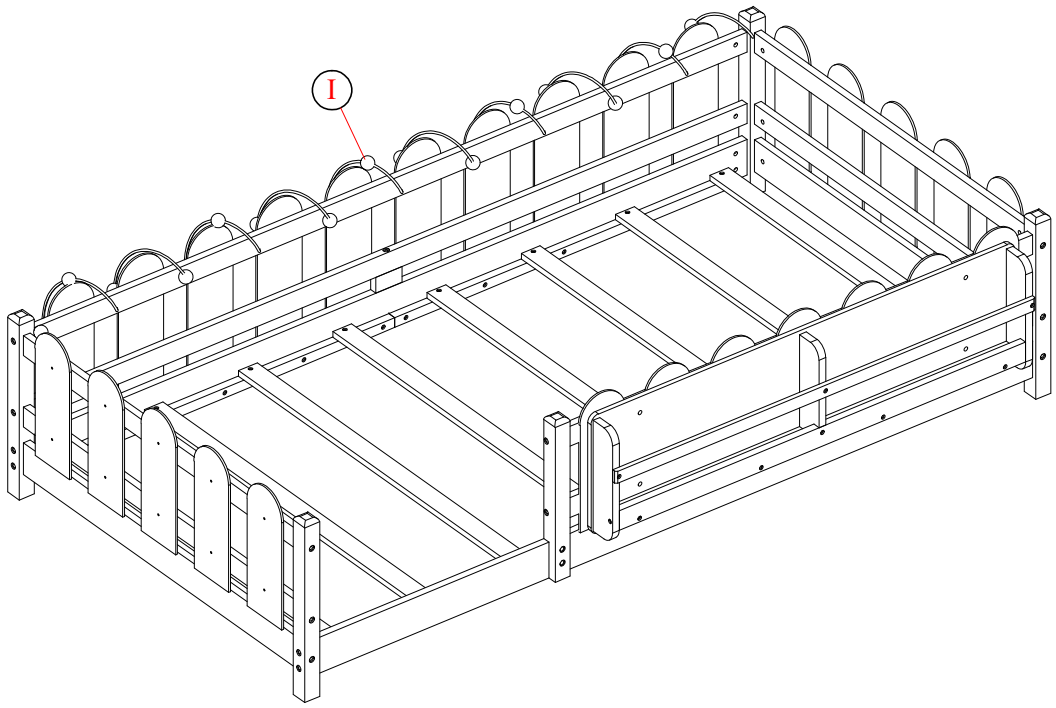
4PCS



STEP- 15

I

1PC



ASSEMBLY COMPLETED

