Assembly Instruction

Thank you for purchasing this quality product . Be sure to check allpacking material carefully for smallparts that may have come loose inside the carton during shipment.

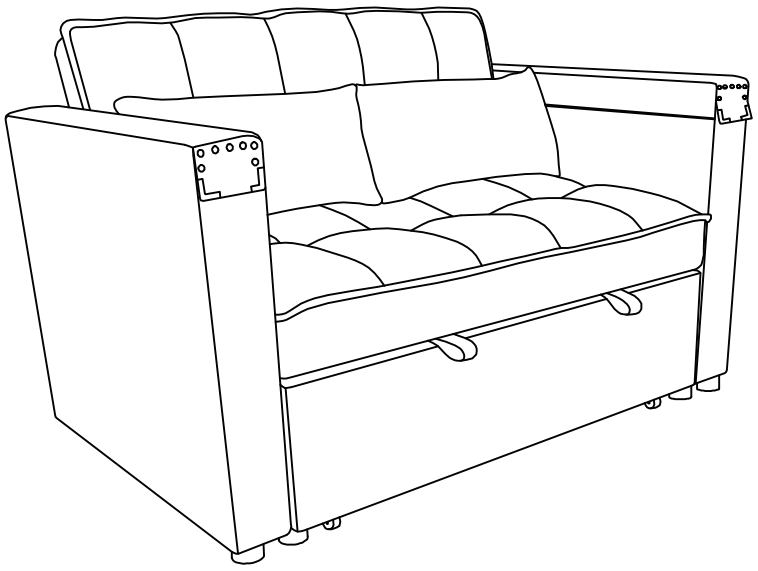

Parts list:

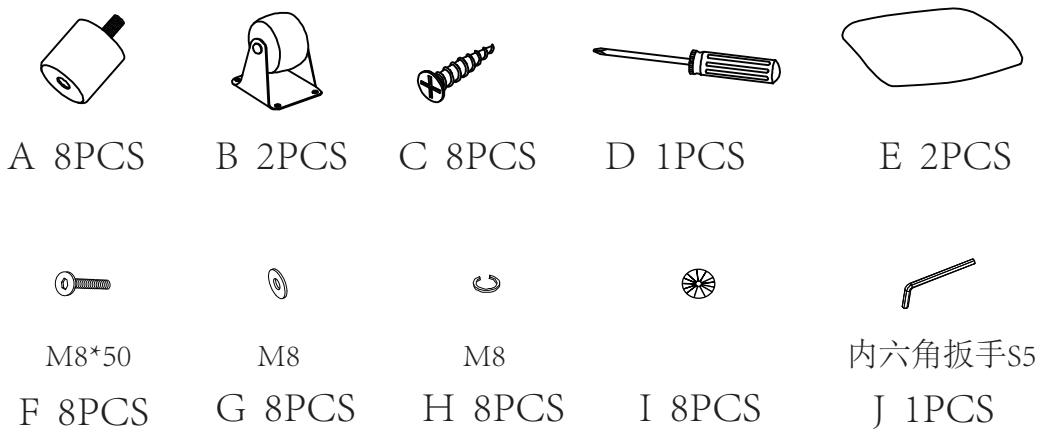

STEP 1:

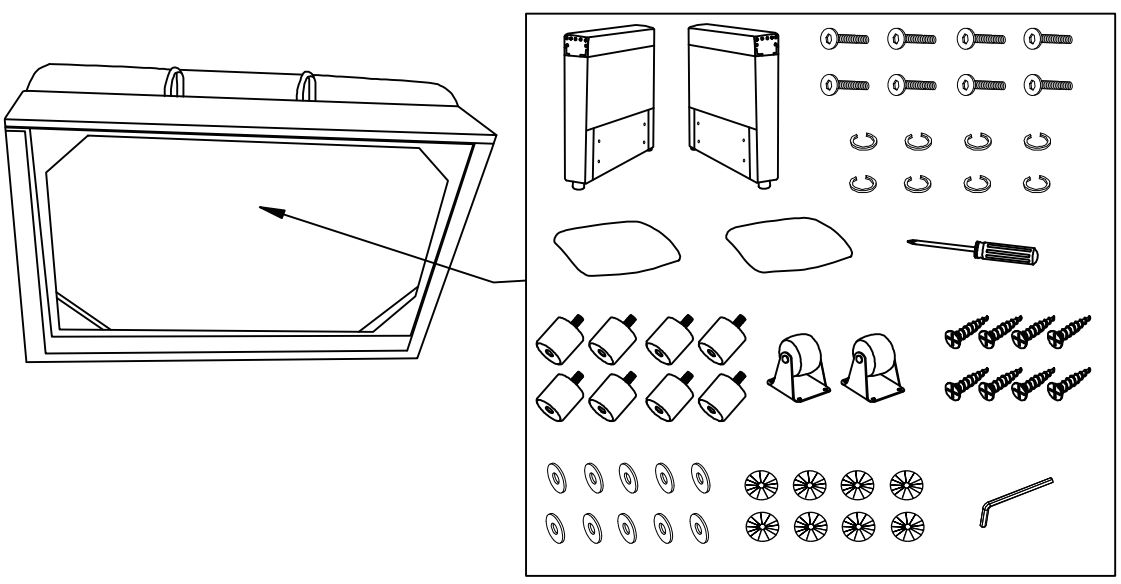

STEP 2:

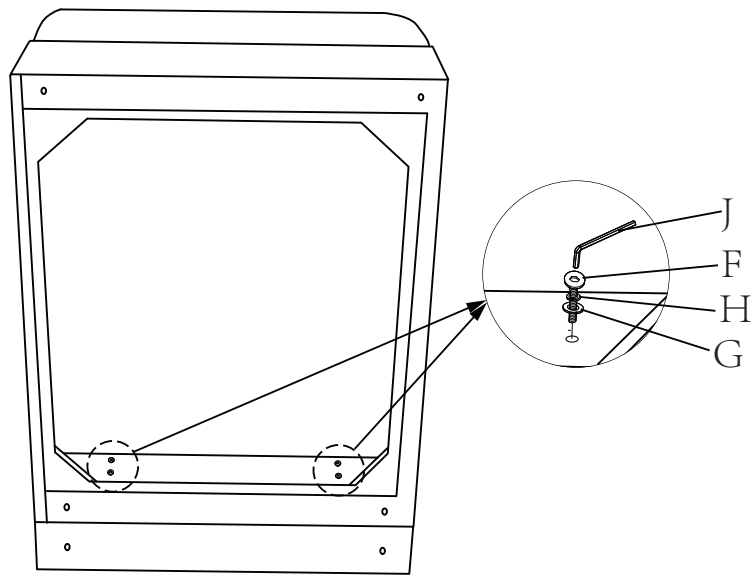

STEP 3:

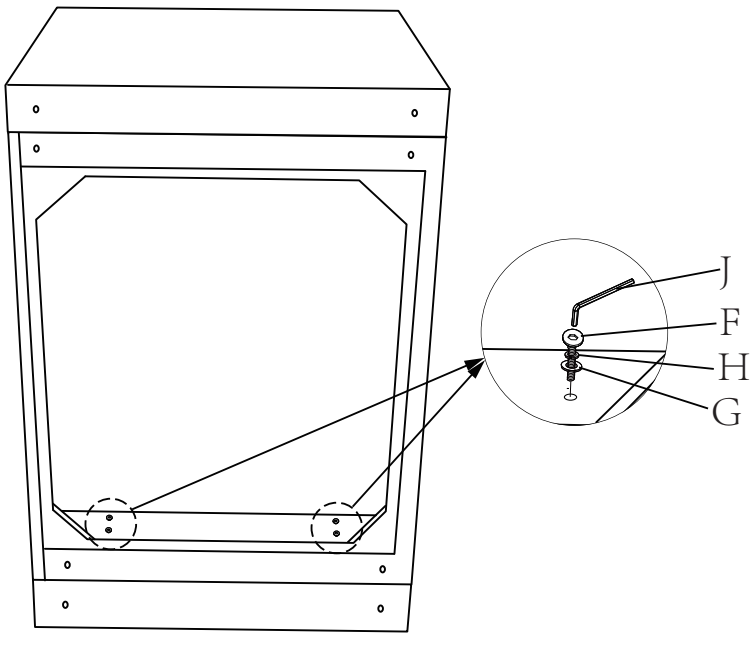

STEP 4:

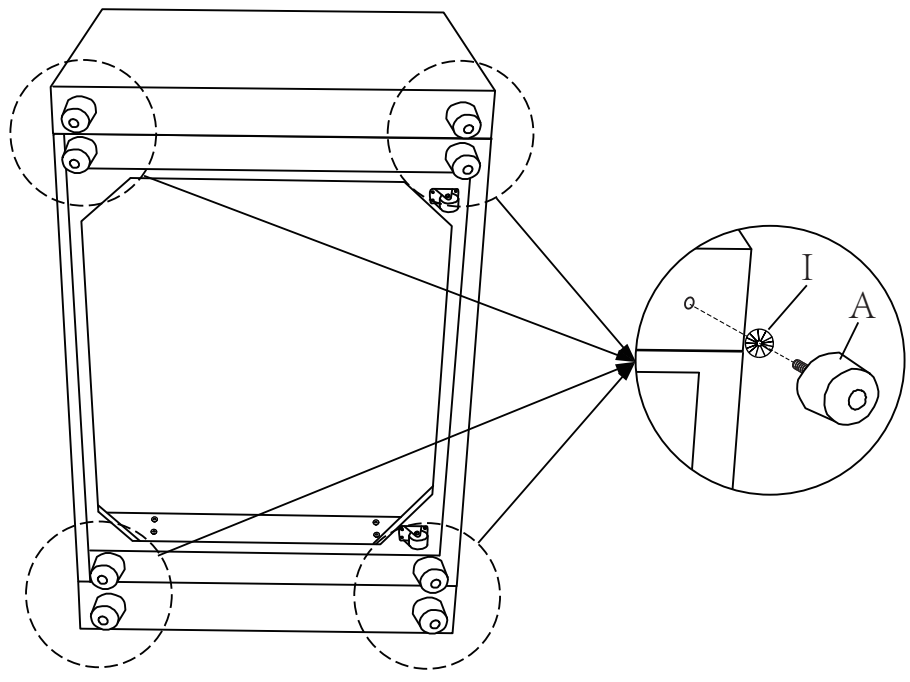

STEP 5:

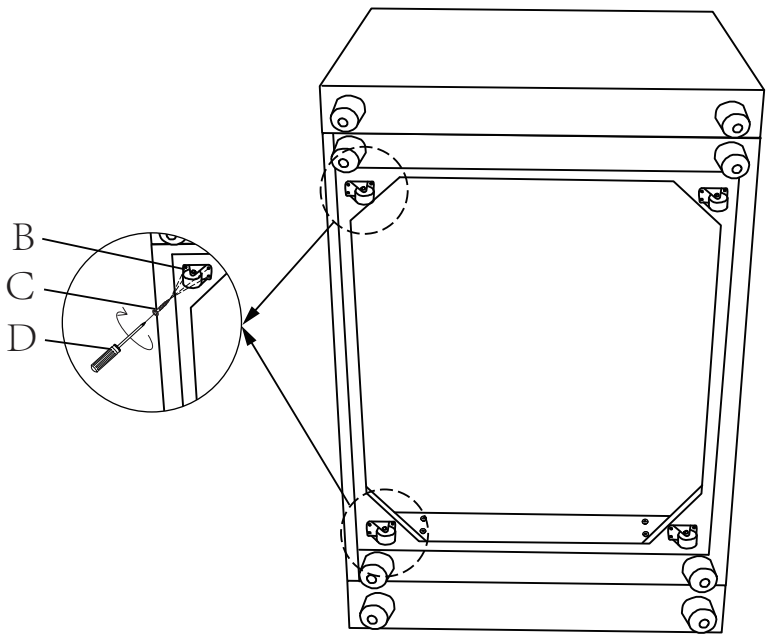

STEP 6:

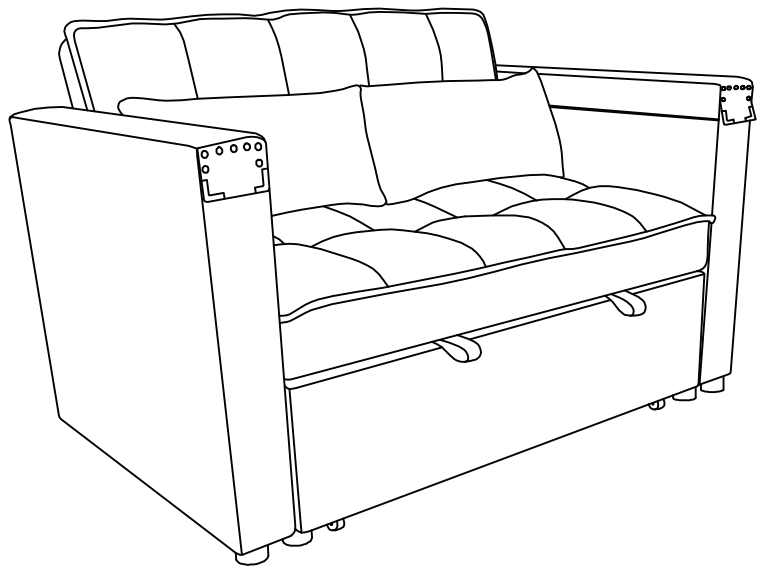

STEP 7:

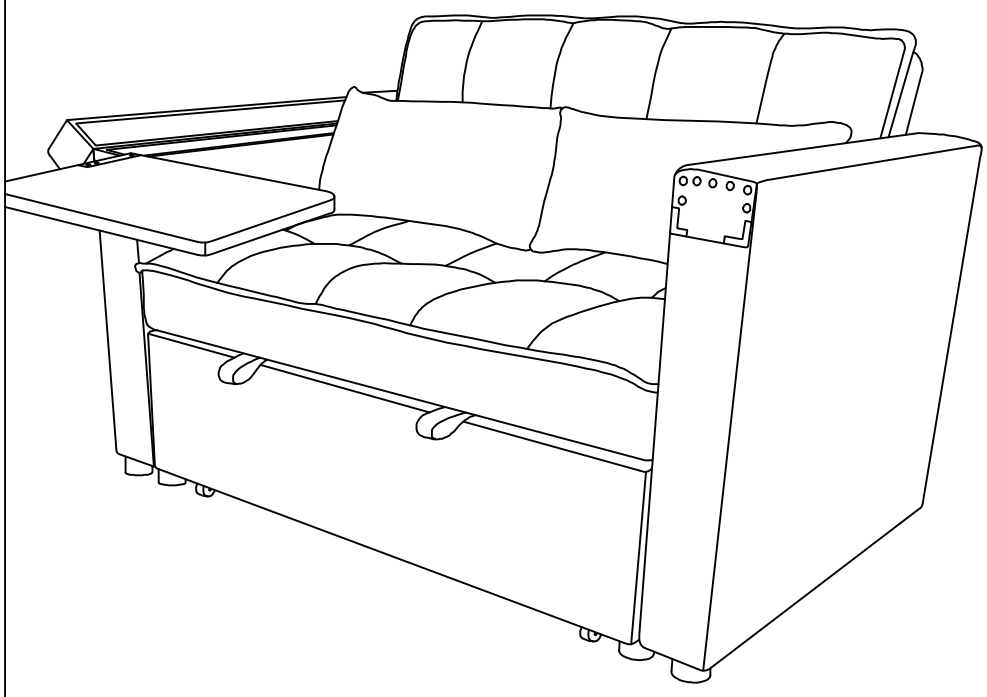

STEP 8:

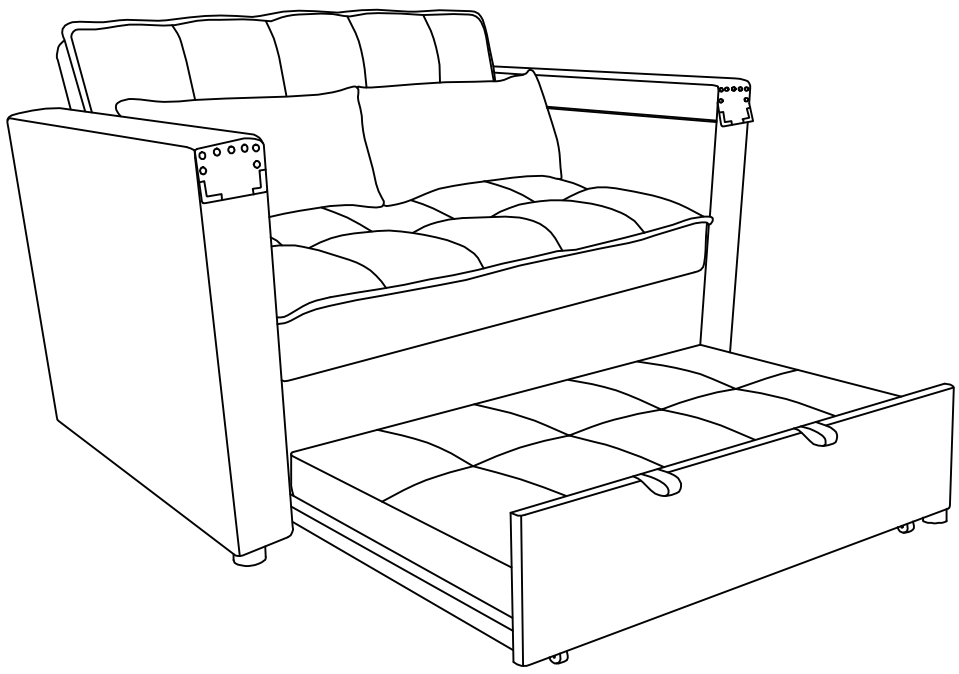

STEP 9:

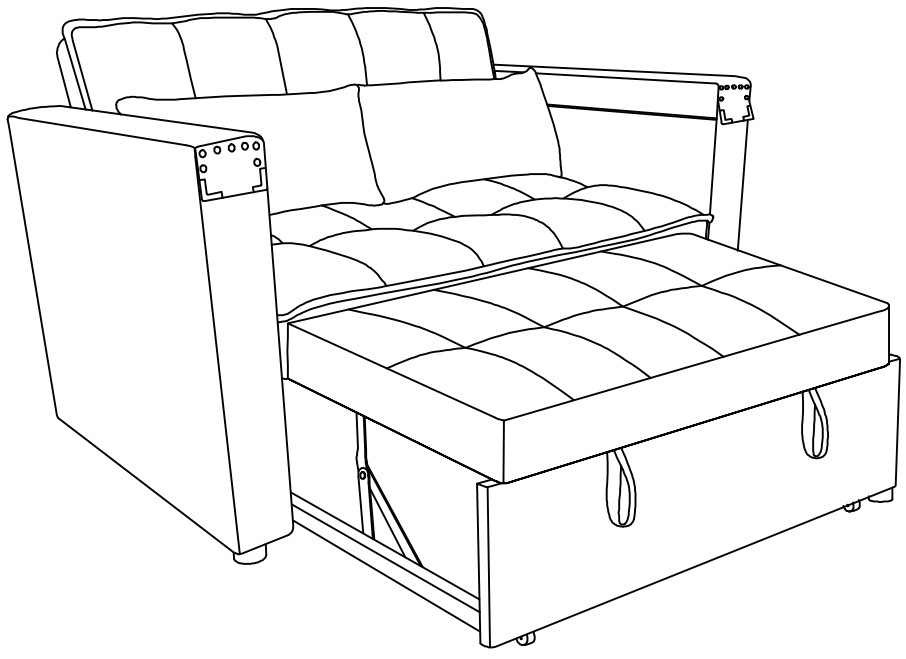
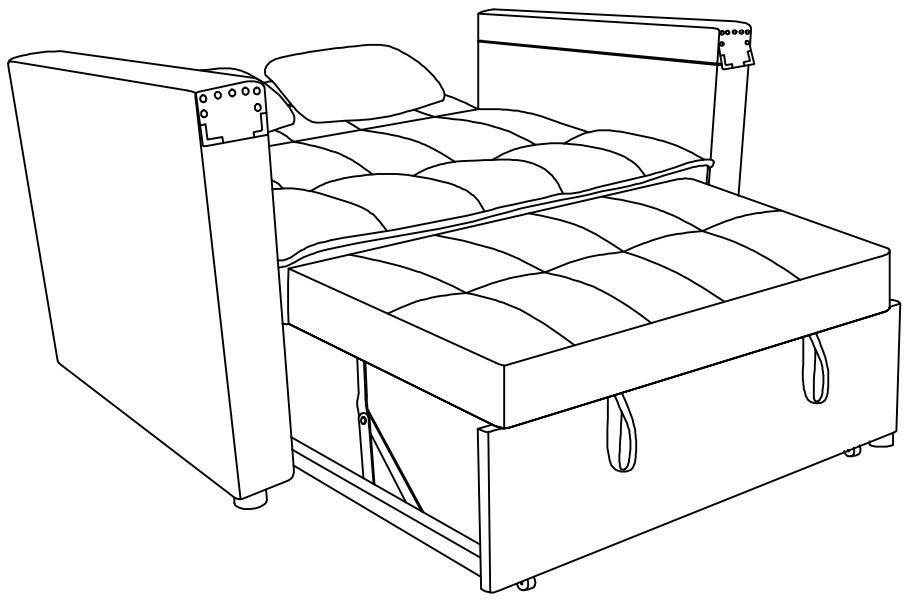
STEP 10: