ASSEMBLY INSTRUCTIONS

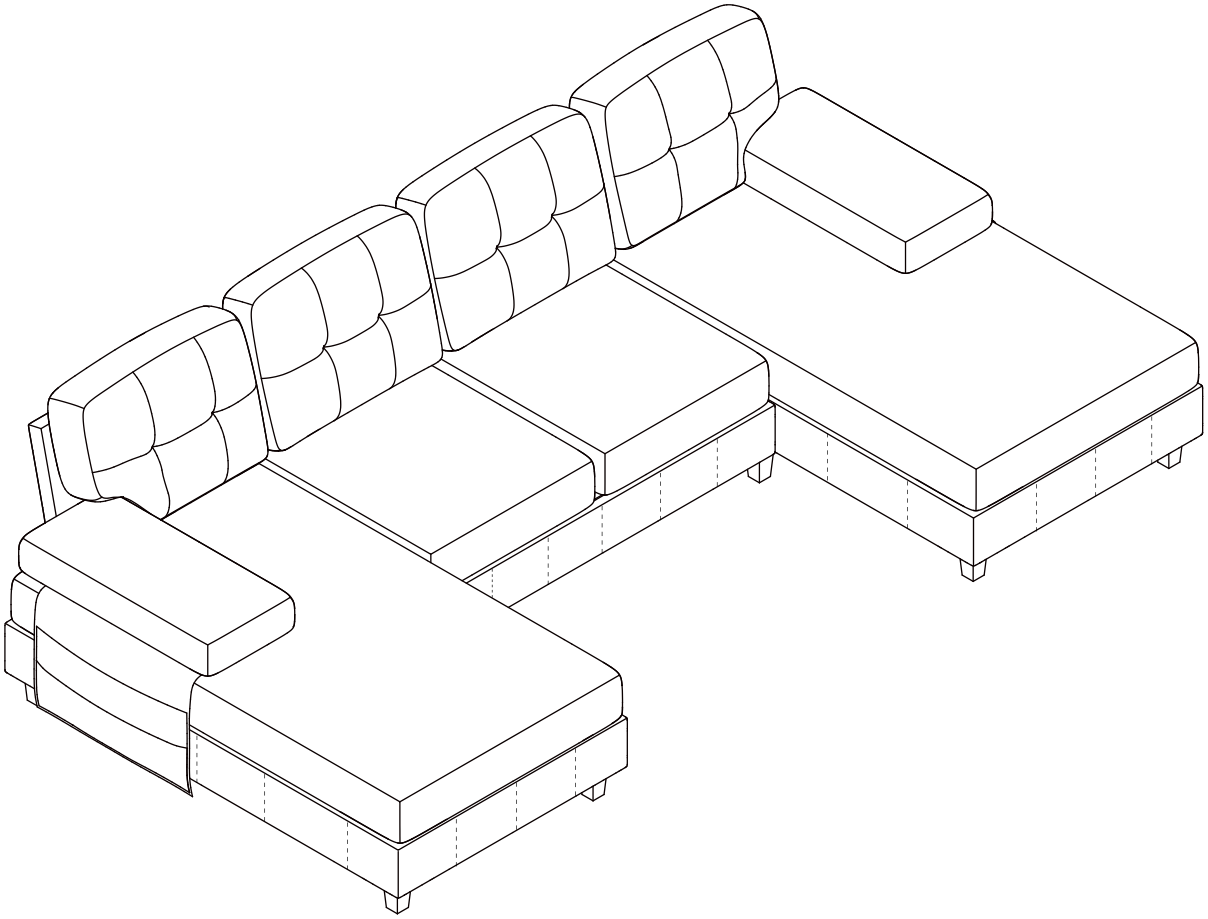

IMPORTANT NOTE

****Place all parts on a lean and smooth surface such as a rug or carpet to avoid the parts from being scratched.**

****Before you begin, please review the assembly instruction step by step.**

****Return & Warranty Policy:**

-We strive to offer the highest quality products. We also provide positive solutions with replacements or refund if needed.

-If the item is damaged or defective, please take photos to show the problem and email to the seller.

-Please do not return back the product before contact the seller.

PART LISTS BOX 1

Part NO.	Part Image	Part Name	QTY	Part NO.	Part Image	Part Name	QTY
A		Left chaise frame	1	O		Right back cushion	1
C		Front panel	1	P		Plastic gasket	10
D		Chaise backrest	2	Q		Plastic legs	10
E		2 Seater backrest	1	R		Connect Iron	4
F		Chaise slat	1	S		Screws M6*25cm	16
K		Armrest	1	T		Screws M6*45cm	8
M		Left back cushion	1	U		Gasket	8
N		2 seater back cushion	2	V		Allen key	1

PART LISTS BOX 2

Part NO.	Part Image	Part Name	QTY	Part NO.	Part Image	Part Name	QTY
B		Right chaise frame	1	I		Right chaise cushion	1
F		Chaise slat	1	J		2 seater cushion	2
G		2 Seater slat	1	K		Armrest	1
H		Left chaise cushion	1	L		Hanging bag	2

Sofa Overall Assembly Drawing

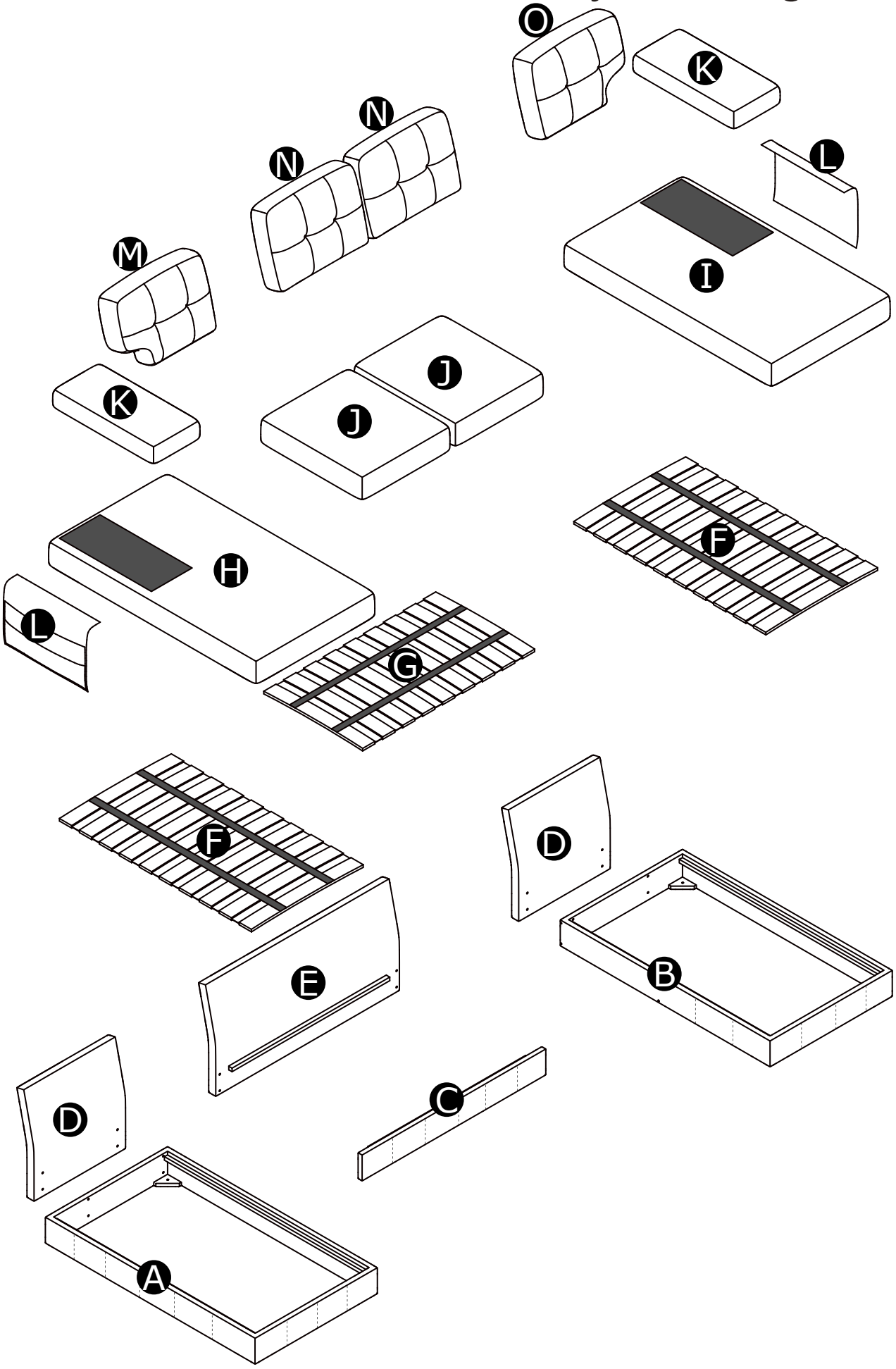

STEP 1

R x4

S x8

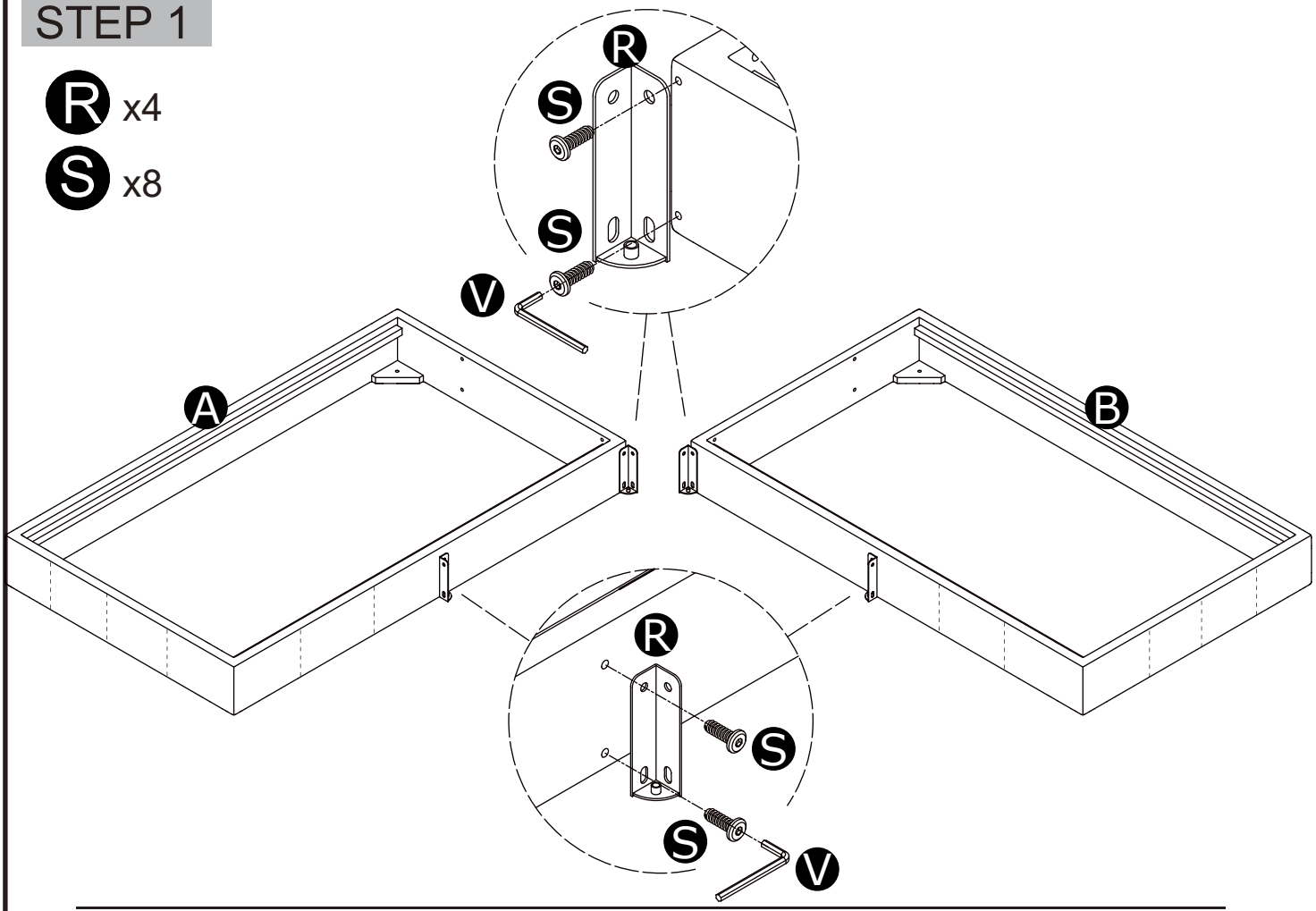

STEP 2

P x10

Q x10

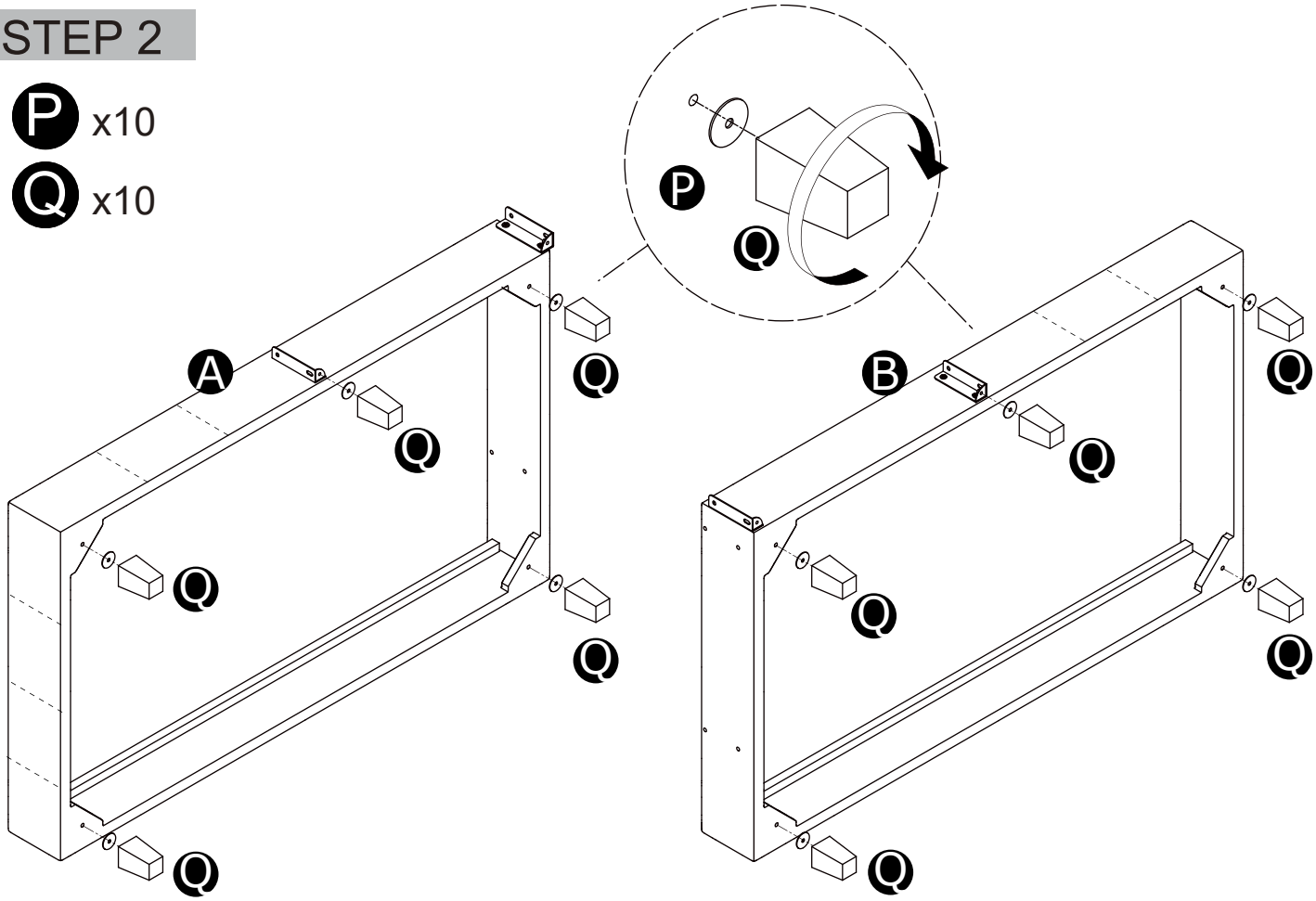

STEP 3

U x8 T x8

V x1

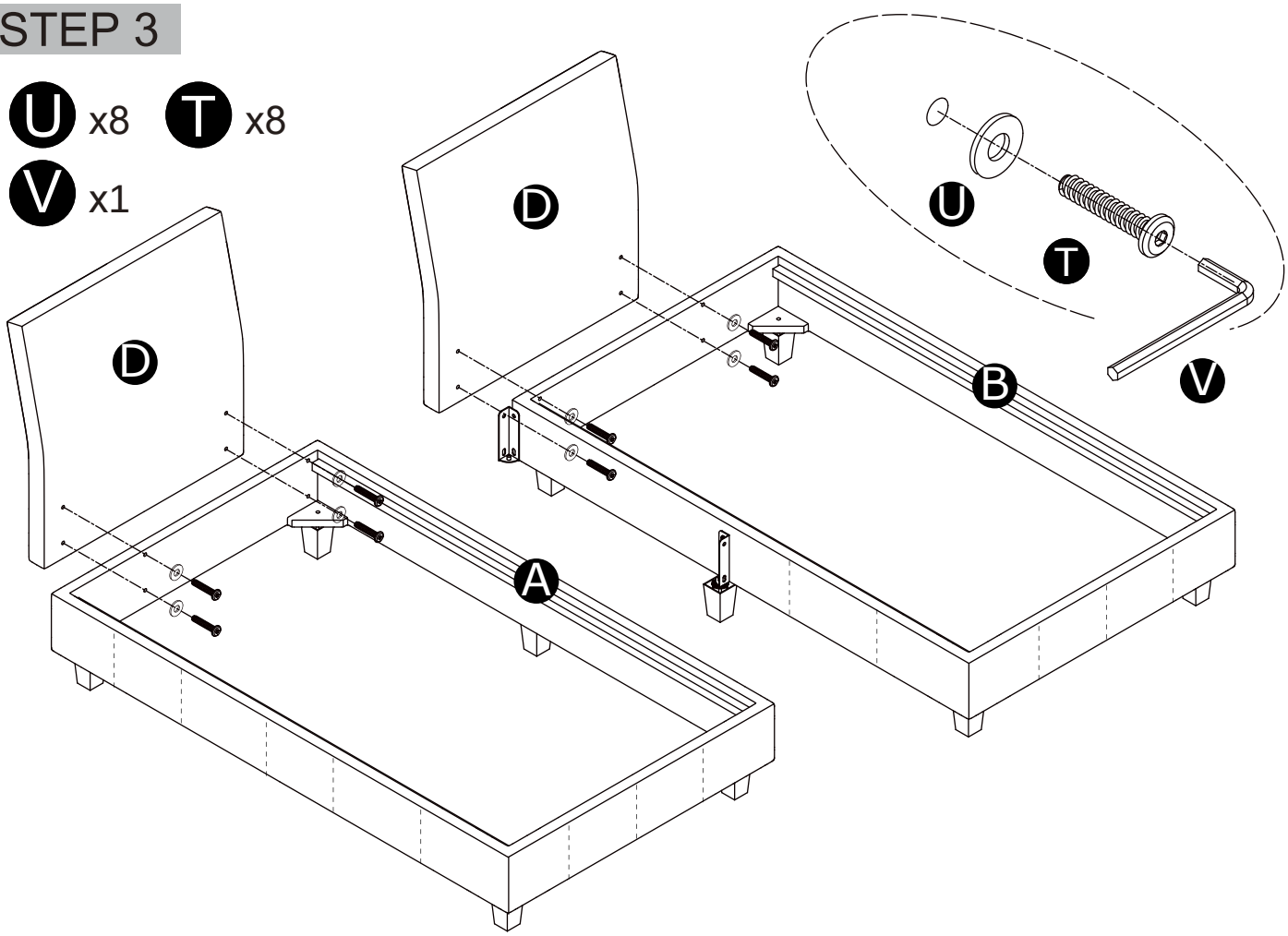

STEP 4

S x4

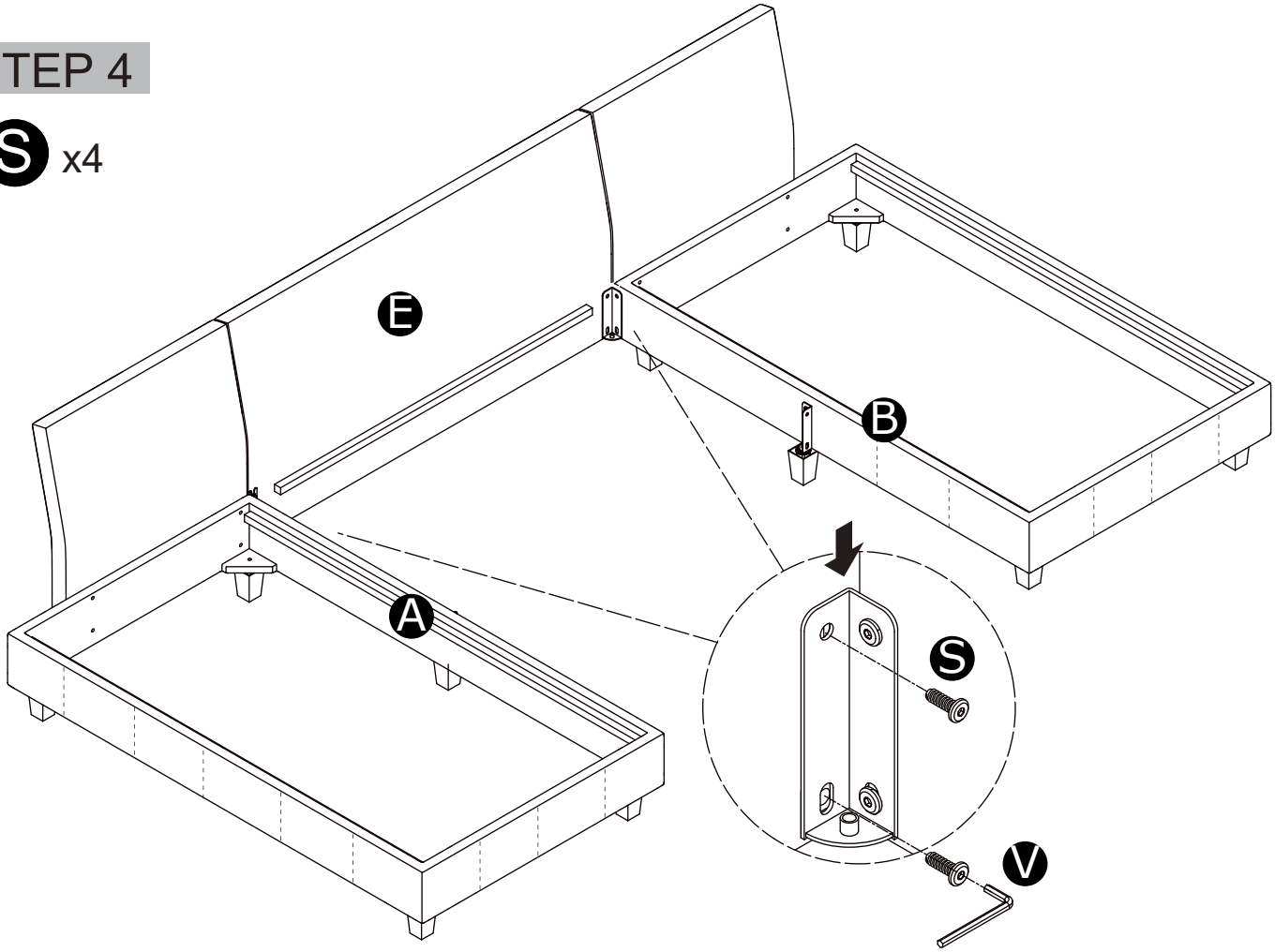

STEP 5

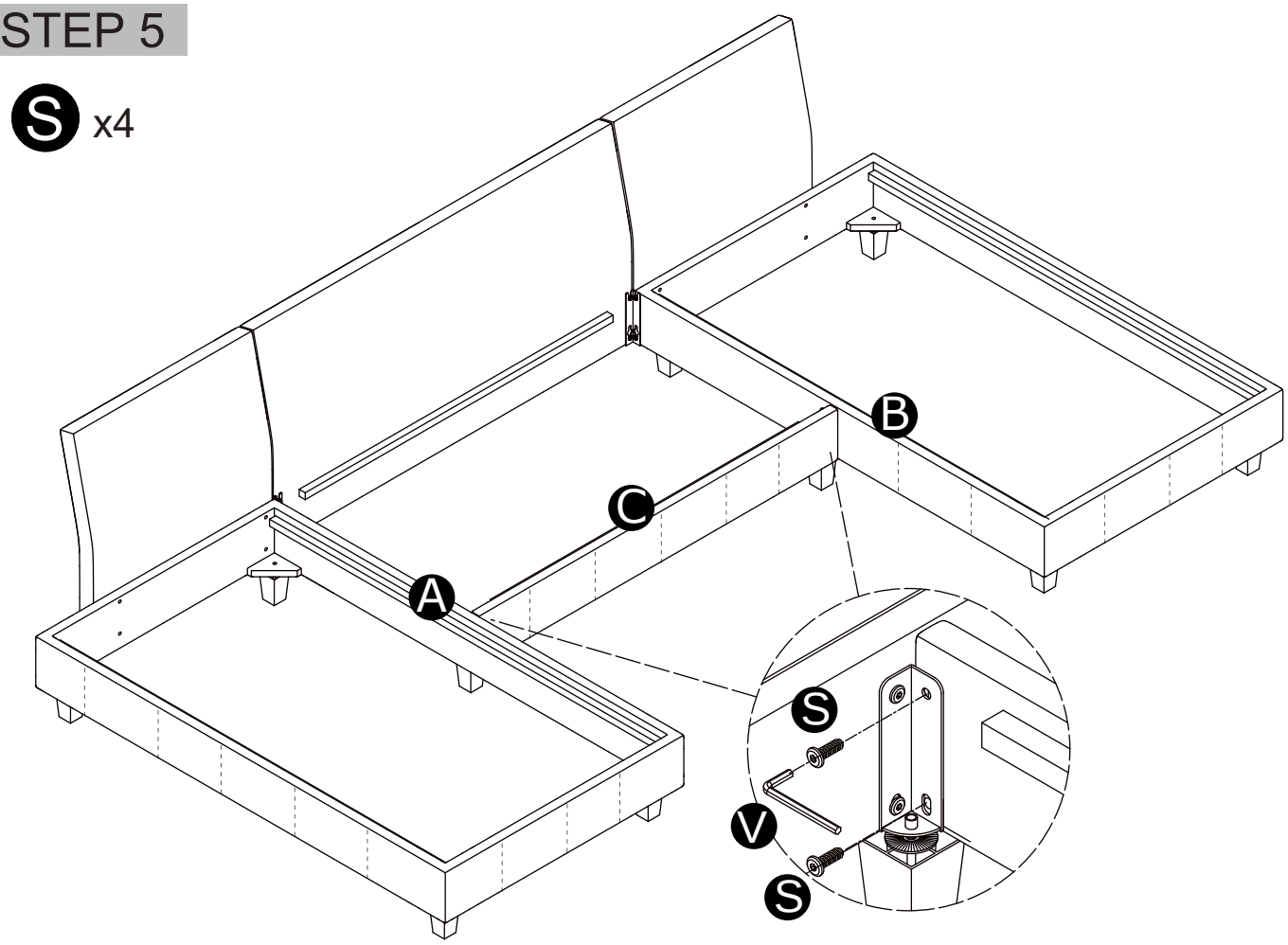

STEP 6

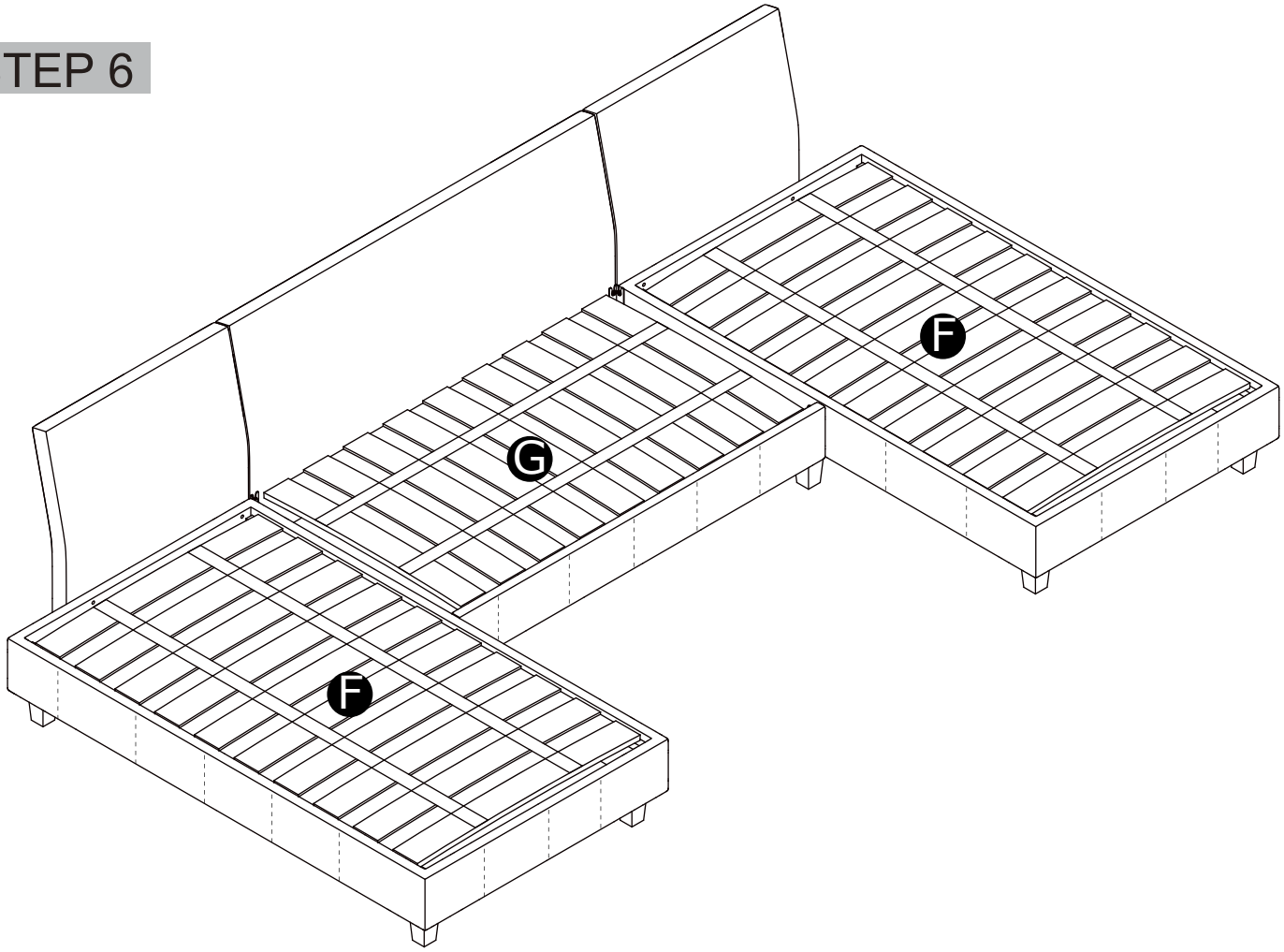

STEP 7

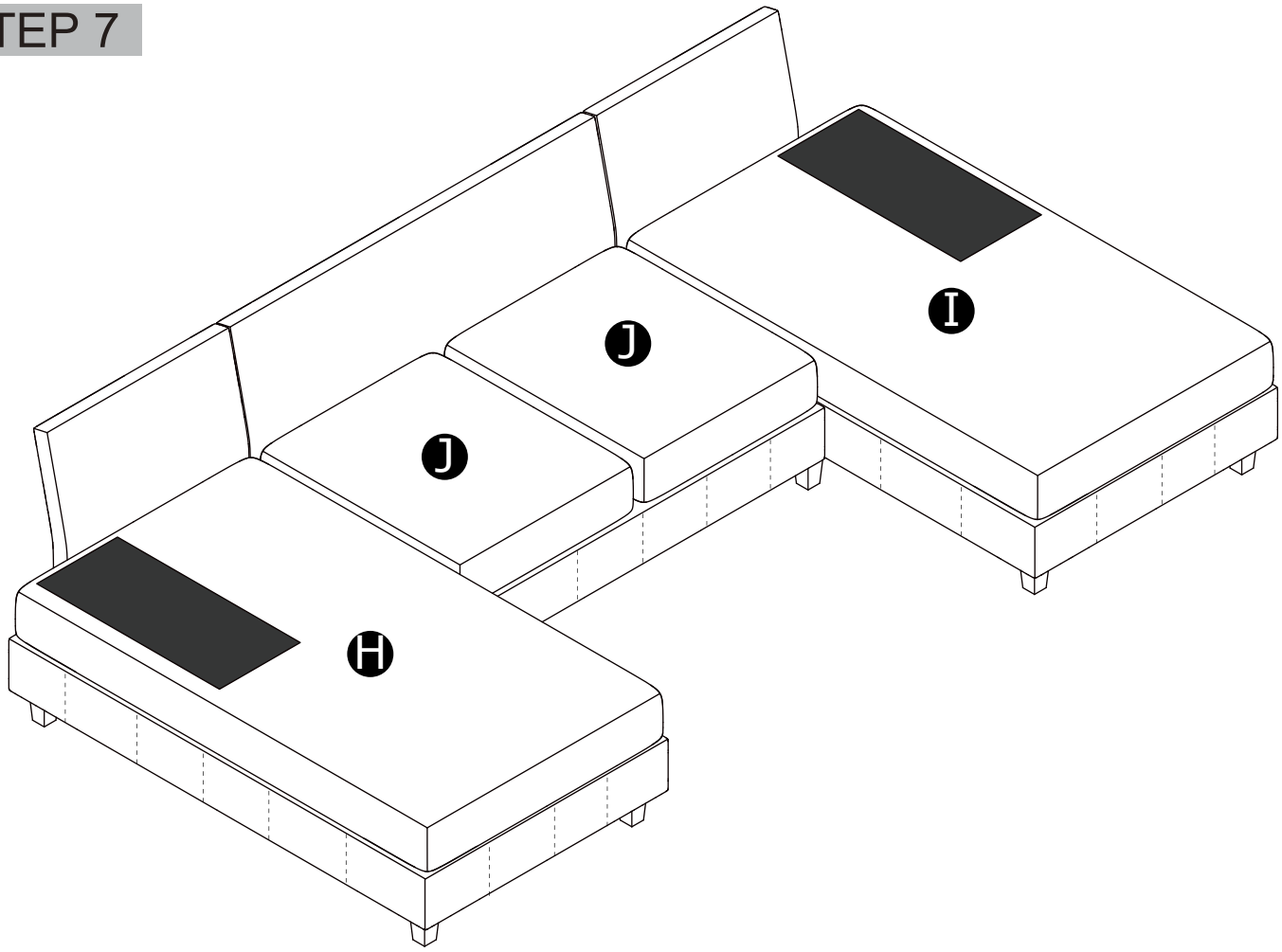

STEP 8

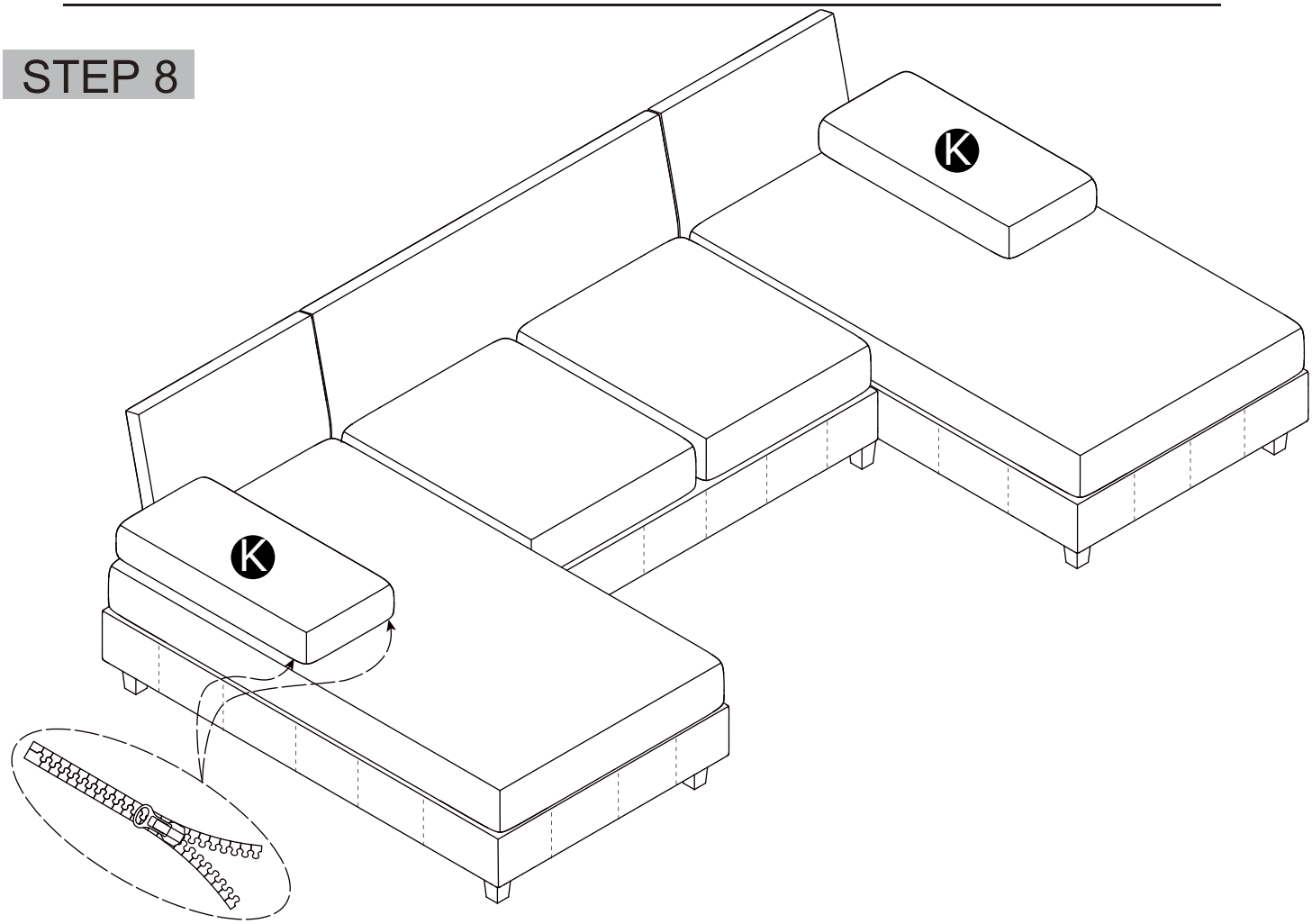

STEP 9

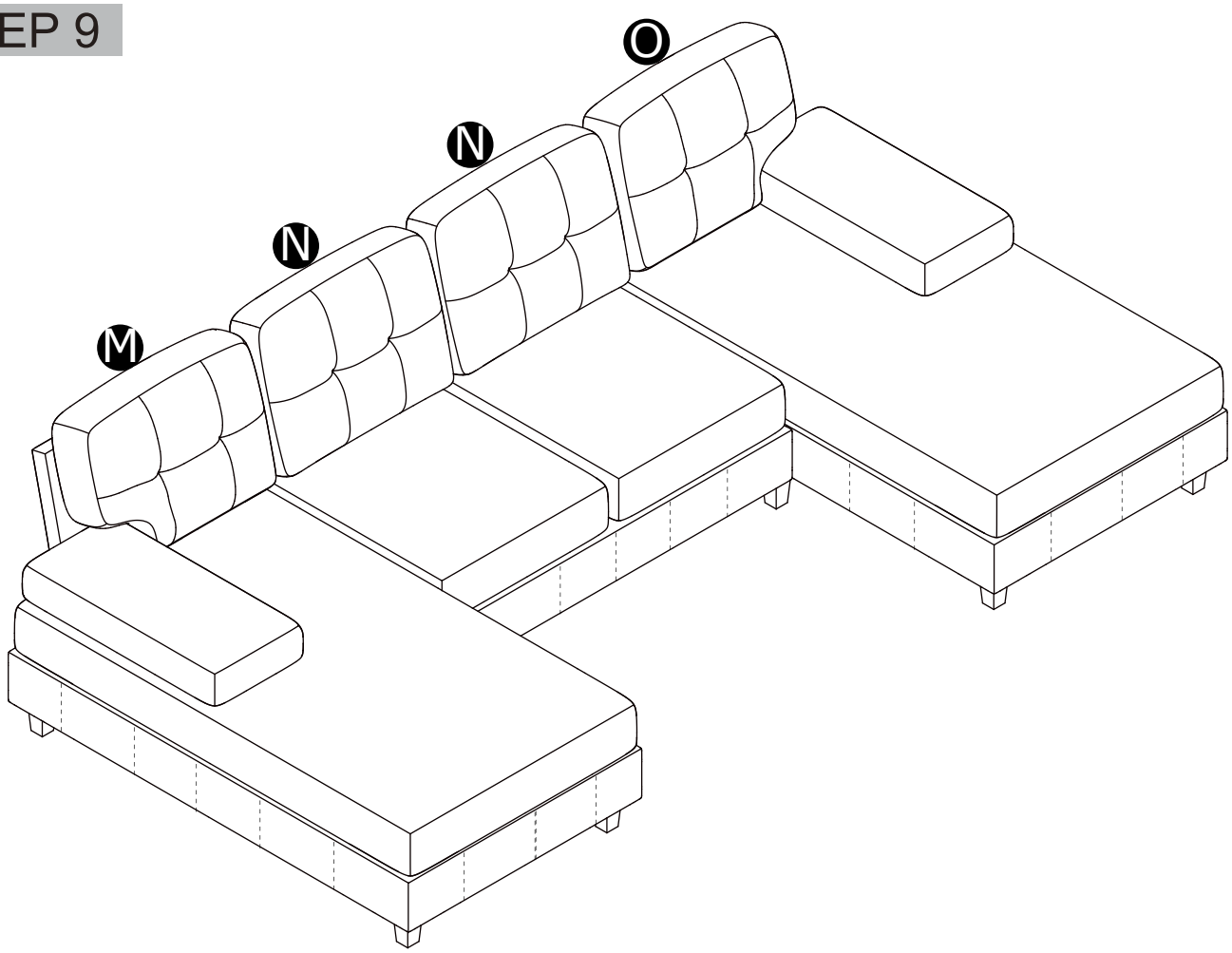

STEP10

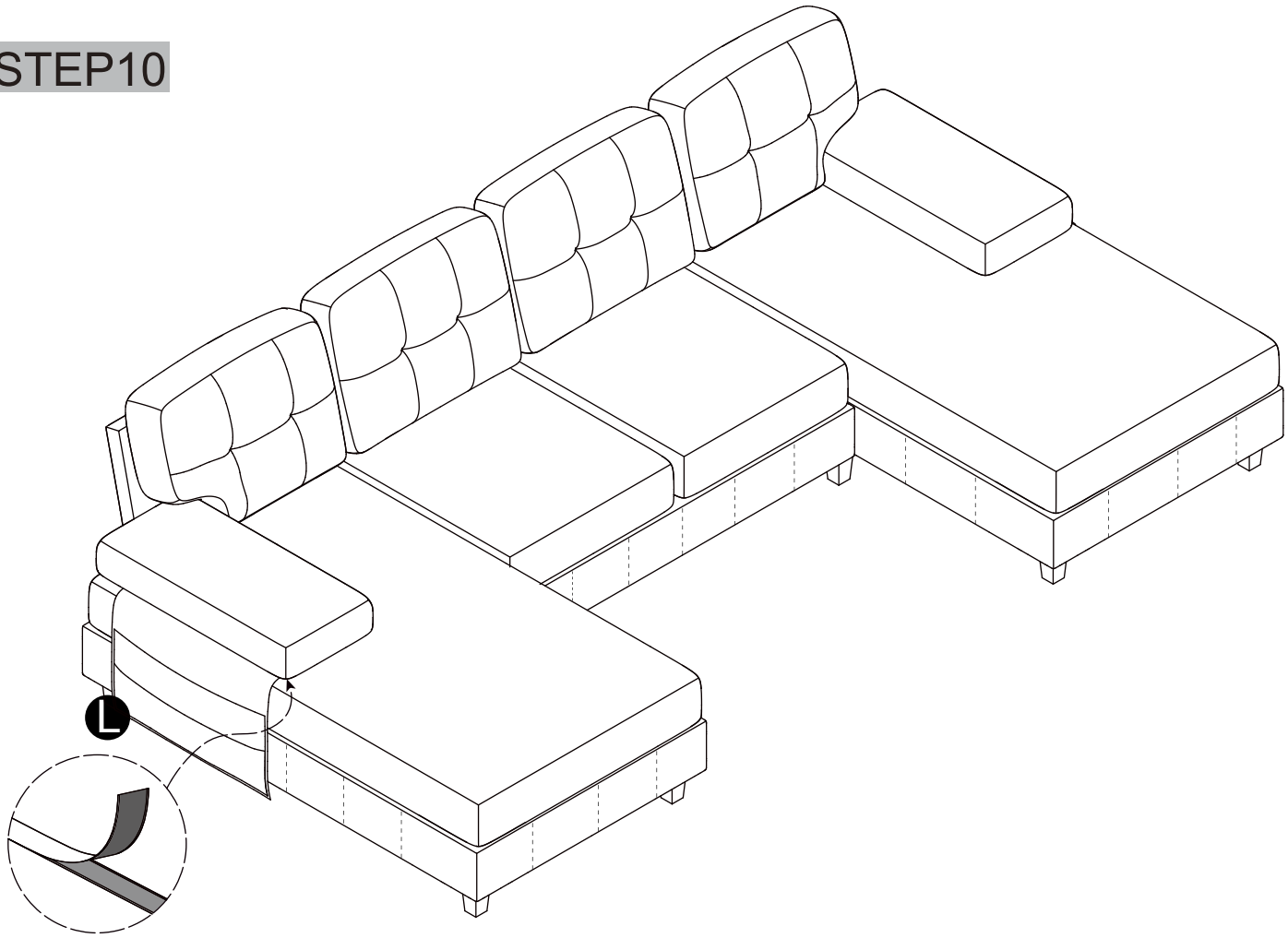
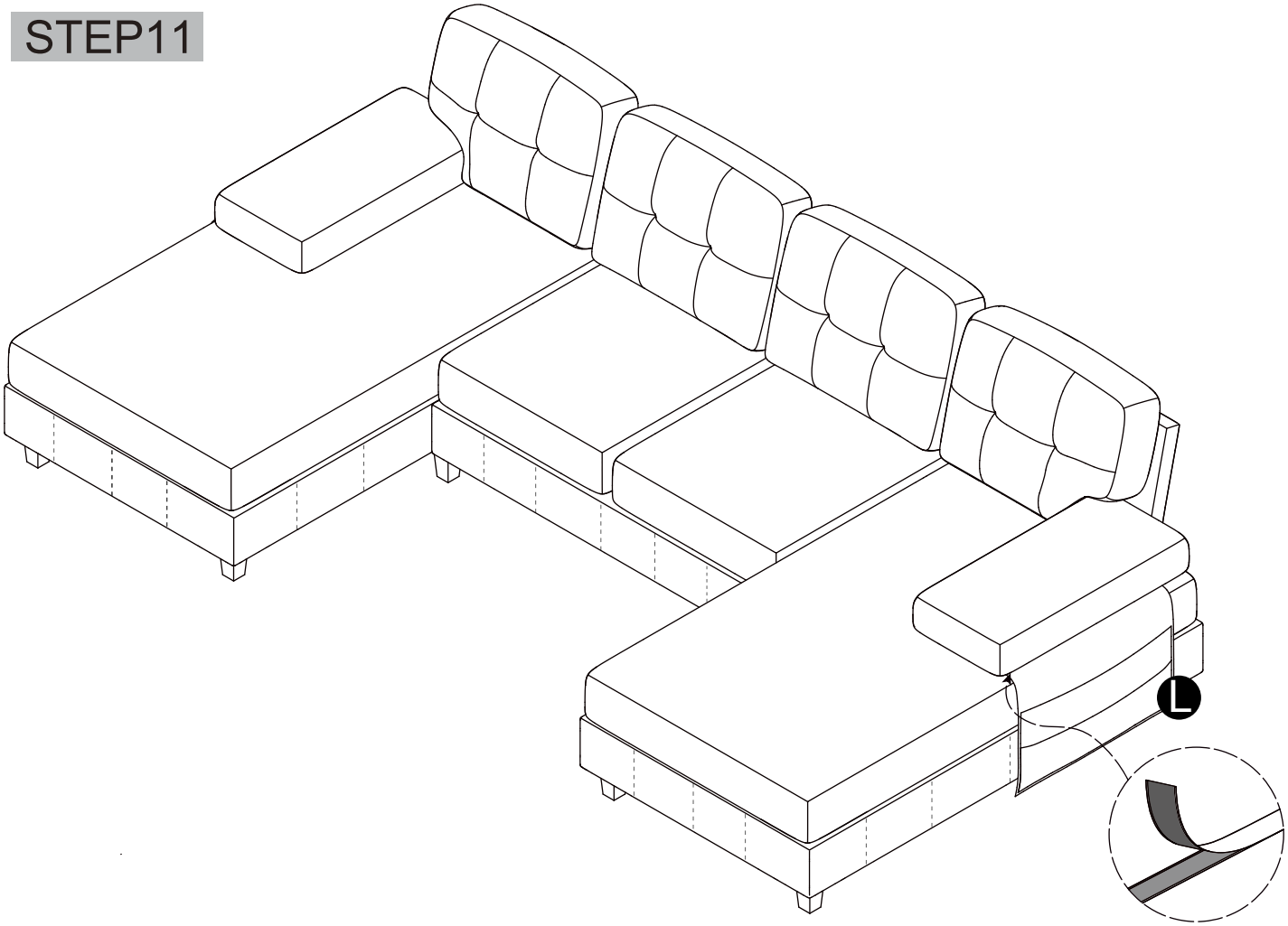
STEP11