Rén Dining Table W2100

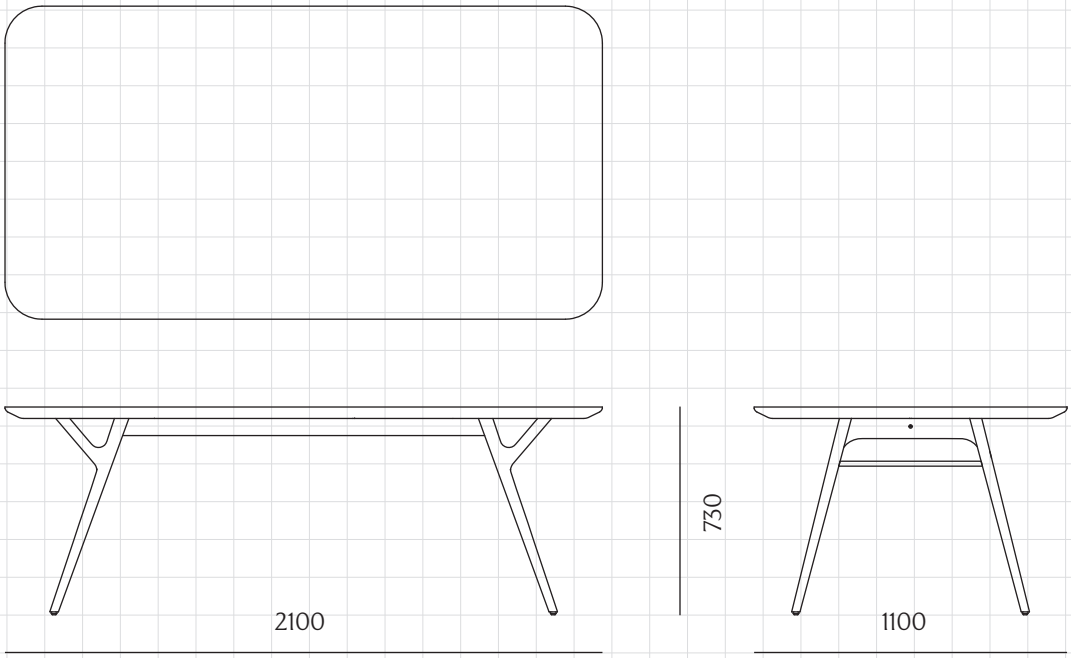

CODE	RN-T411-2100
DIMENSIONS	W2100 x D1100 x H730mm
NET WEIGHT	57.0 kg
ENVIRONMENT	Indoor
MATERIALS	Solid wood legs, Wood veneer top, Stainless steel hairline gold, Steel black powder coat matt *Please refer to website or contact your local representative for complete material swatches.

SHIPPING

Package	Knock Down		
Package Qty	2 pcs/box		
Packaging	**Measurement (mm)**	**Volume (cbm)**	**Gross Weight (kg)**
FCL	W2200 x D1200 x H145	0.38	58.89
	W910 x D720 x H785	0.51	12.38
LCL/AIR	W2240 x D1240 x H235	0.65	91.16
	W930 x D740 x H880	0.61	20.37