Installation Instructions

Parts Included

A*1

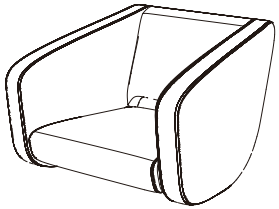

Seat

B*1

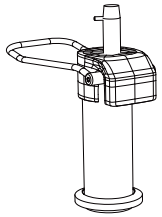

Pump

C*1	D*1	E*6	F*6

G*1

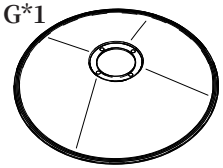

Base

H*1

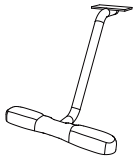

Footrest

① Attach the pump to the base

D*1	F*6	G*6	H*1
			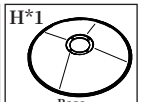 Base

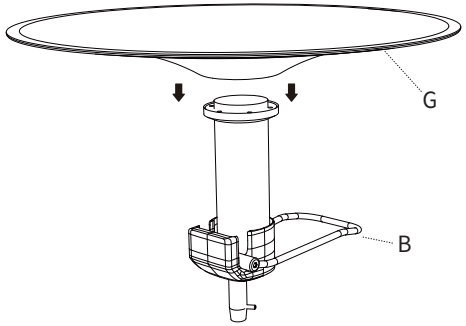

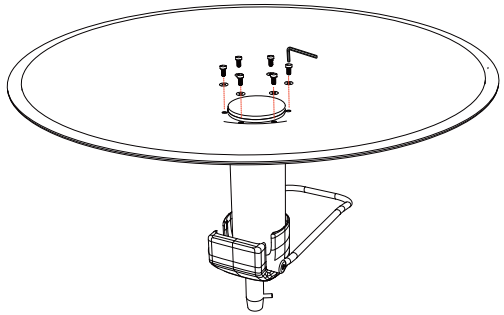

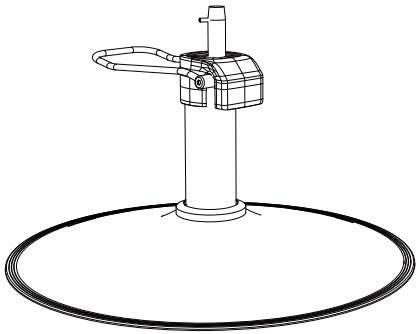

1-1.Turn the pump upside down, insert the Base.

1-2.Secure the base onto the pump using 6 black screws and the wrench (Make sure the screws are tightened to prevent chairs from rocking after installation.)

1-3.Turn the Pump to the upright position.

② Install the Footrest

2-1. Remove the 2 pre-installed screws from the bottom of the seat.

2-2. Align the screw holes of the footrest with the bottom of the seat, insert and tighten the screws removed in the previous step.

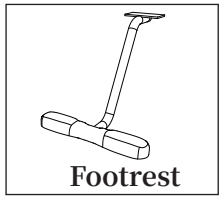

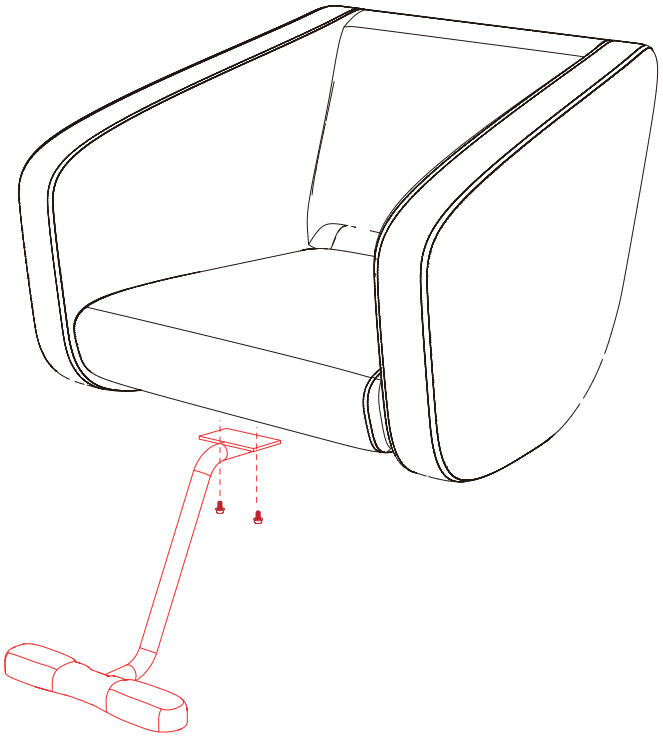

③ Placing the Seat onto the Pump

This step is recommended to be done by two people.

3-1. One person lifts the seat, while the other crouches down to adjust the position and angle of the seat, inserting the seat onto the pump.

3-2. Sit on the chair for a short while to ensure a secure connection between the pump and the seat.

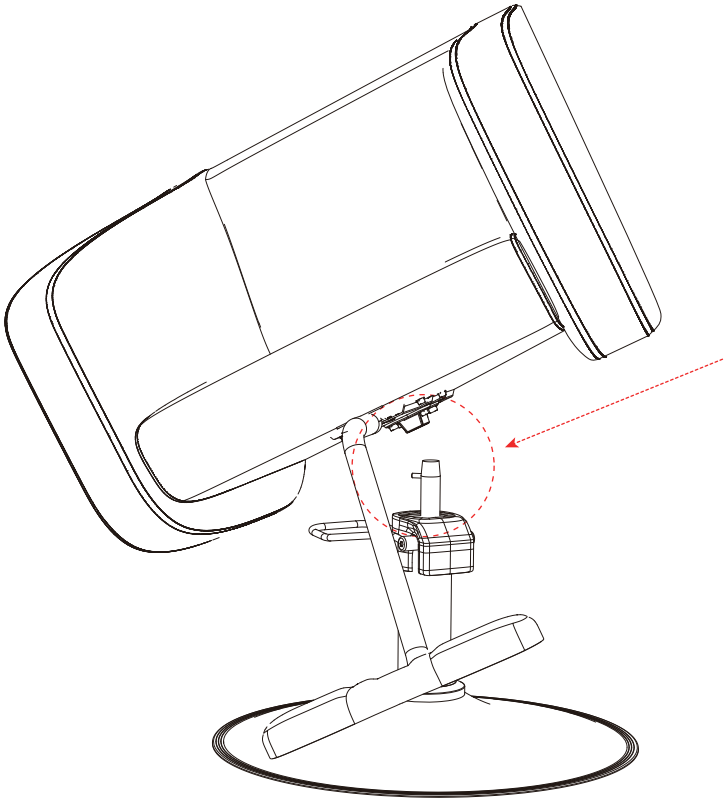

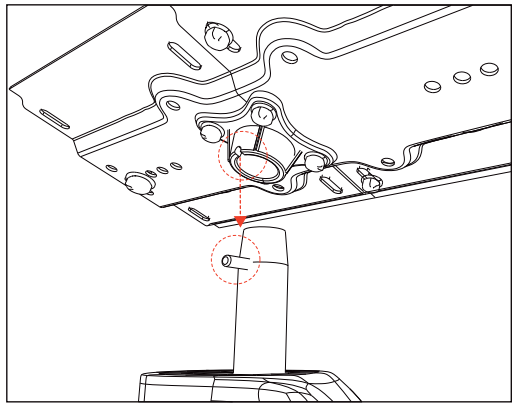

Chair Operation Guide

1

Locking or Unlocking the Chair's Swivel Function

This chair has a locking feature.

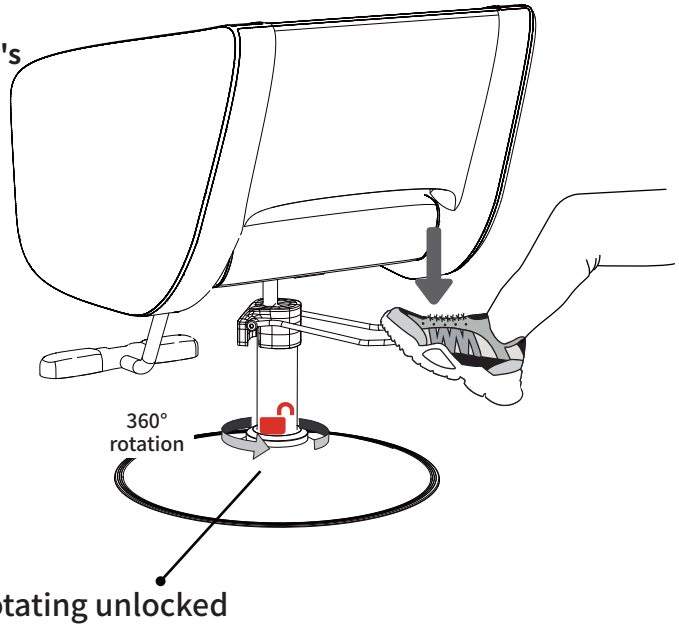

1-1. Unlocking the Chair

Press down the step pedal while rotating the chair; at this point, the chair can swivel.

2 Adjusting the Chair Height

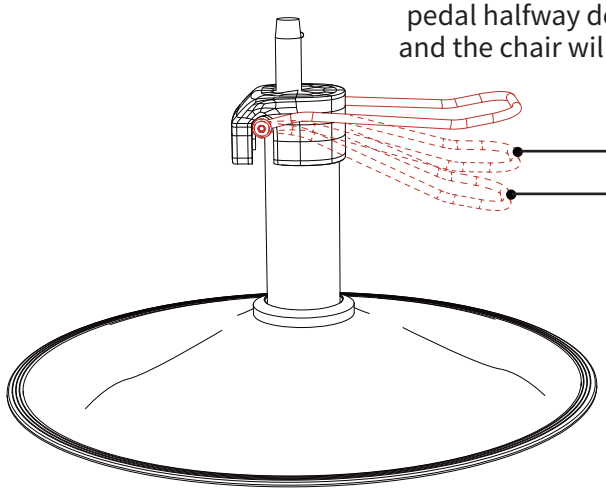

2-1. Raising the Chair

Continuously press the step pedal halfway down, and the chair will rise.

2-2. Lowering the Chair

Press the step pedal all the way down and hold it, and the chair will lower.

3

Locking or Unlocking the Chair's Swivel Function

This chair has a locking feature.

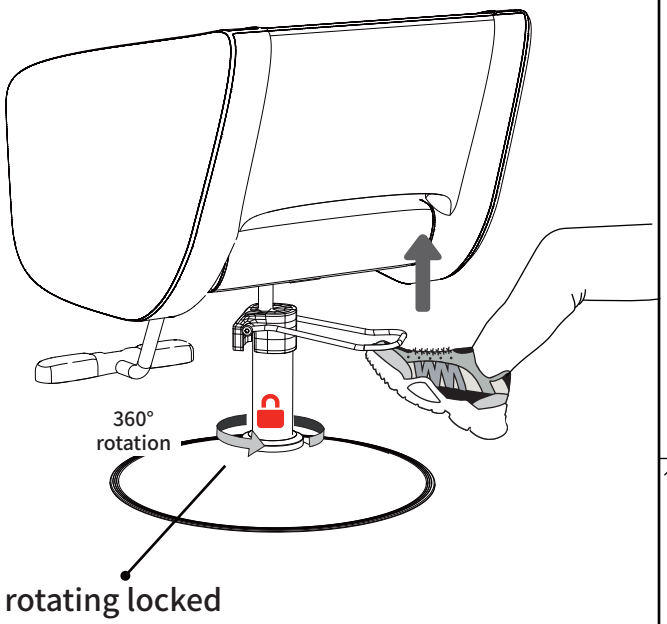

3-1. Locking the Chair

Lift the step pedal upwards, and the internal oil pump will lock, preventing the chair from rotating.

Correct Way to Leave the Chair to Avoid Tipping

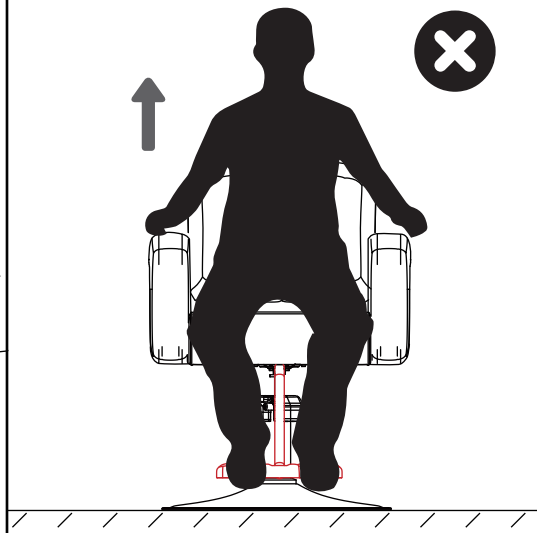

Incorrect Demonstration:

Standing on the footrest to get off the chair may cause the chair to tip forward.

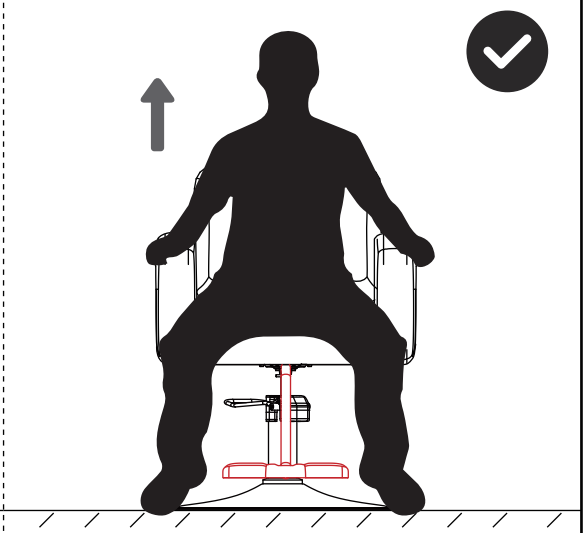

Correct Demonstration:

First, lower the chair to is lowest position. Then, have the guest place their feet on the ground before standing up and leaving the chair.

Trouble and Solution

NO.	Trouble	Potential Issues	Solution
1	The pump is not working.	The pump's lift function is not working properly.	Please refer to section 2 of the operation guide to check if the operation is correct.
2		Cannot swivel.	Please refer to section 3 of the operation guide to check if the operation is correct. If the chair still has difficulty rotating, please repeat lifting the foot pedal and then pressing it down while rotating the chair several times. This should make the chair easier to rotate.
3	The pump is making unusual noises.	There is air inside the pump.	Because it's brand new, there may be some air inside the pump. Please repeatedly lift and lower the chair to expel the air.
4	The chair is wobbling.	Loose connection between the pump and the base.	Please check the screws underneath the base and tighten them again.
5	Missing screws.	Some screws are pre-installed.	Most screws are pre-installed on the chair's components. Please check again to see if there are screws in the screw holes on the chair's components.
6	Missing parts.	The chair is shipped in two packages.	If your chair is shipped in two separate packages, we will send you the tracking numbers for both packages after the chair has been shipped. Please keep an eye out for them. The two packages may not arrive simultaneously.
7	Damaged	The chair leather, metal, and other accessories are damaged.	If you find any damage to the chair after receiving it, please do not rush to return it. Please contact us and provide pictures of the damage in your message so that we can quickly identify the required parts. We will promptly send you the replacement parts.
8	Other issues	Contact Us	If you have any further questions, please feel free to contact us. In order for us to better understand and resolve the issue quickly, please provide relevant pictures or videos related to the problem in your email.

WARNING:

ANY PACKING BAGS OF THIS PRODUCT ARE NOT TOYS. TO AVOID THE DANGER OF SUFFOCATION, KEEP AWAY FROM BABIES AND CHILDREN. DO NOT USE IN CRIBS OR BEDS.