Installation Manual

Parts List

screw
(A x 142)

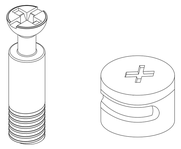

Wooden teno
(B x 45)

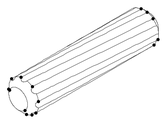

Foot pegs
(C x 12)

Cam Lock Fastening System Installation

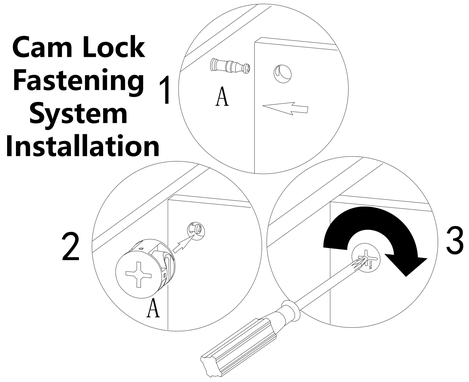

Tool

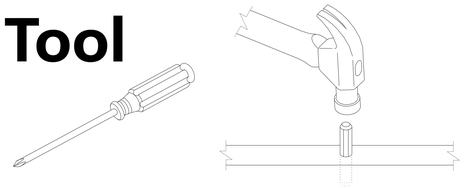

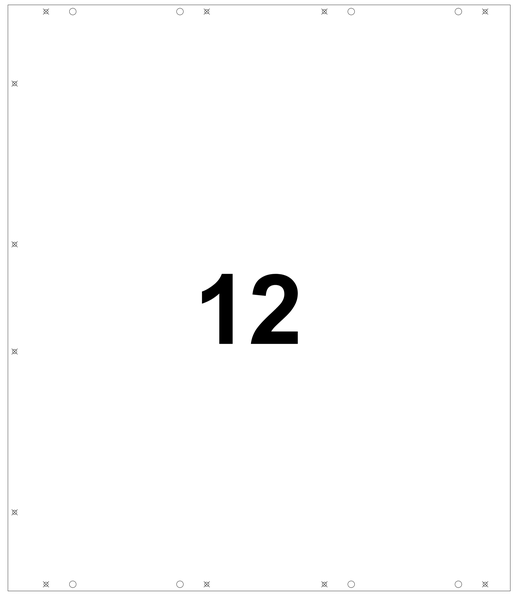

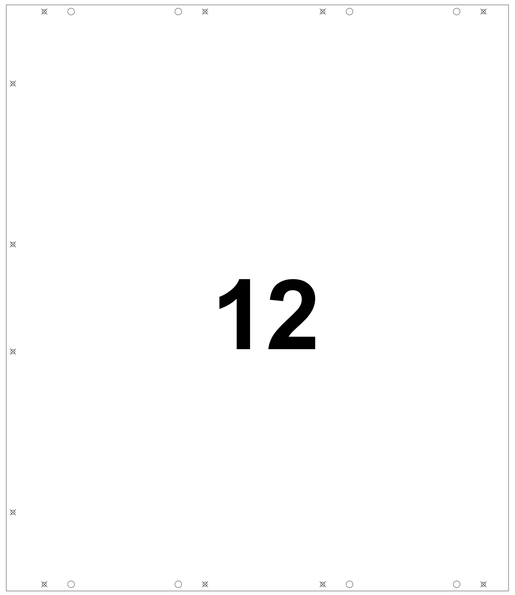

Parts List

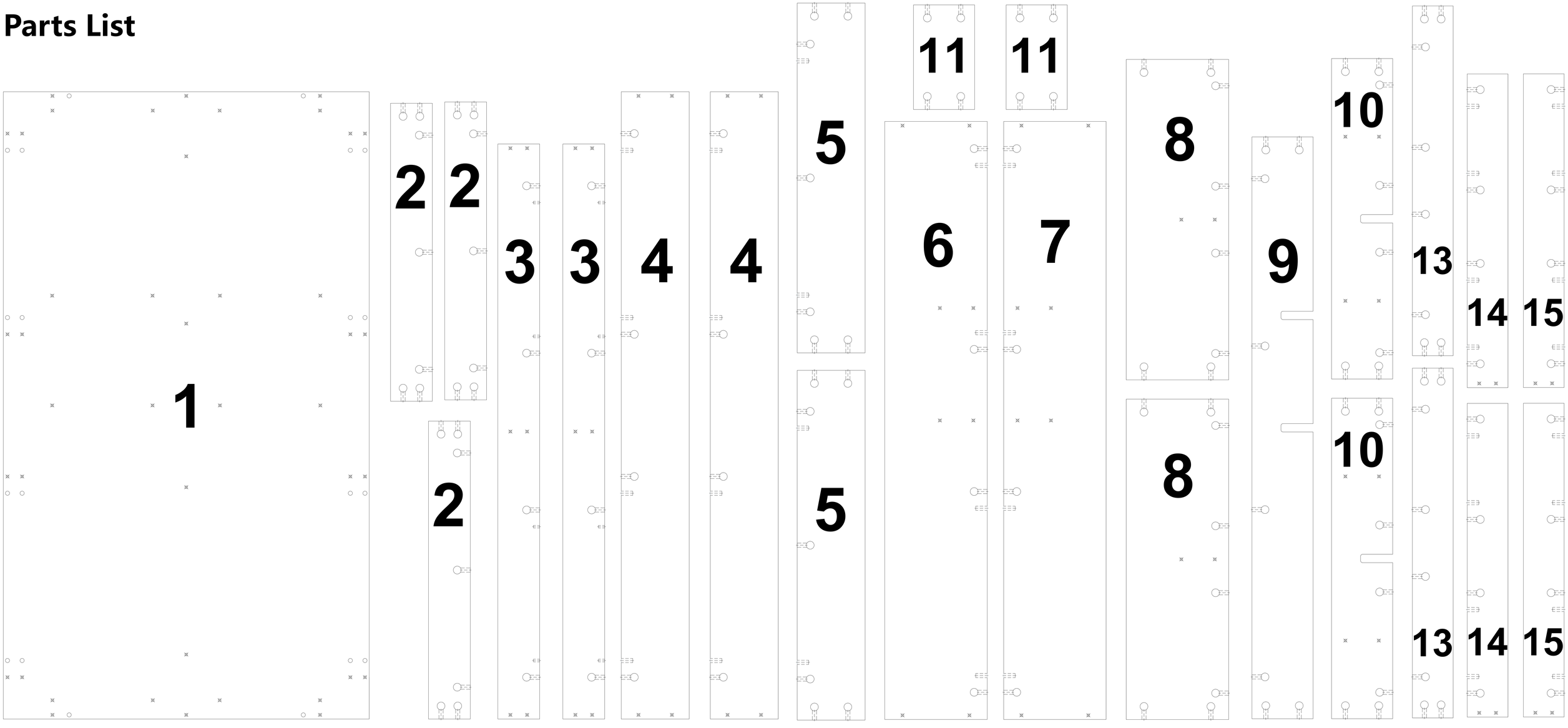

step1

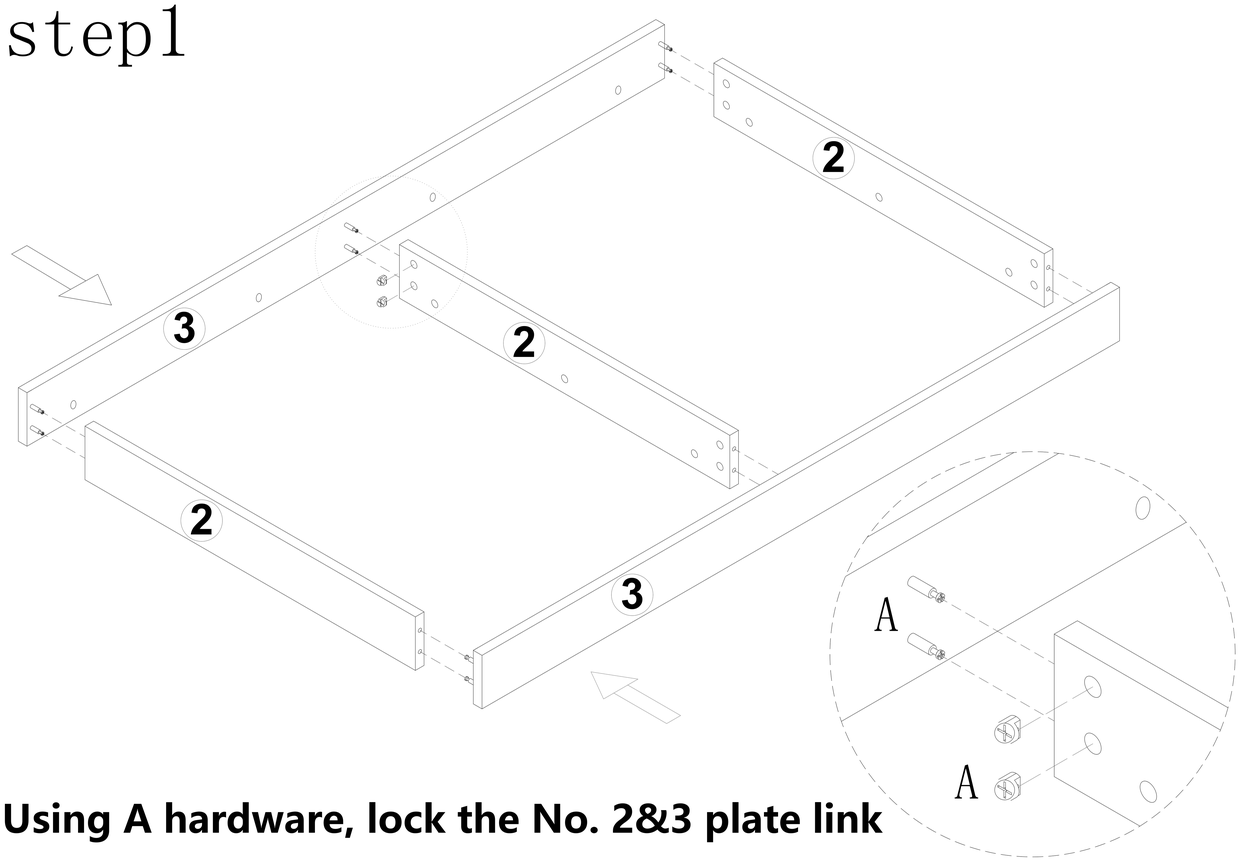

Using A hardware, lock the No. 2&3 plate link

step2

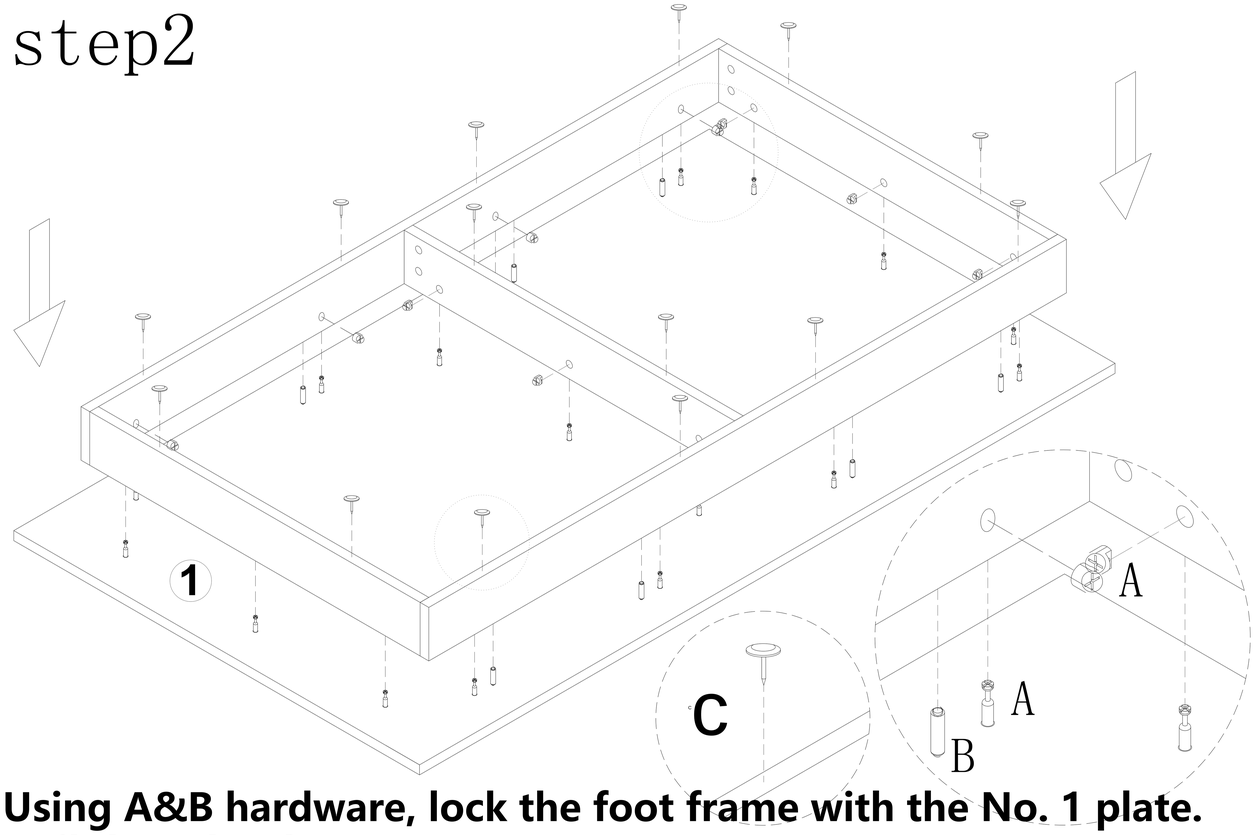

Using A&B hardware, lock the foot frame with the No. 1 plate. Nail the D hardware on.

step3

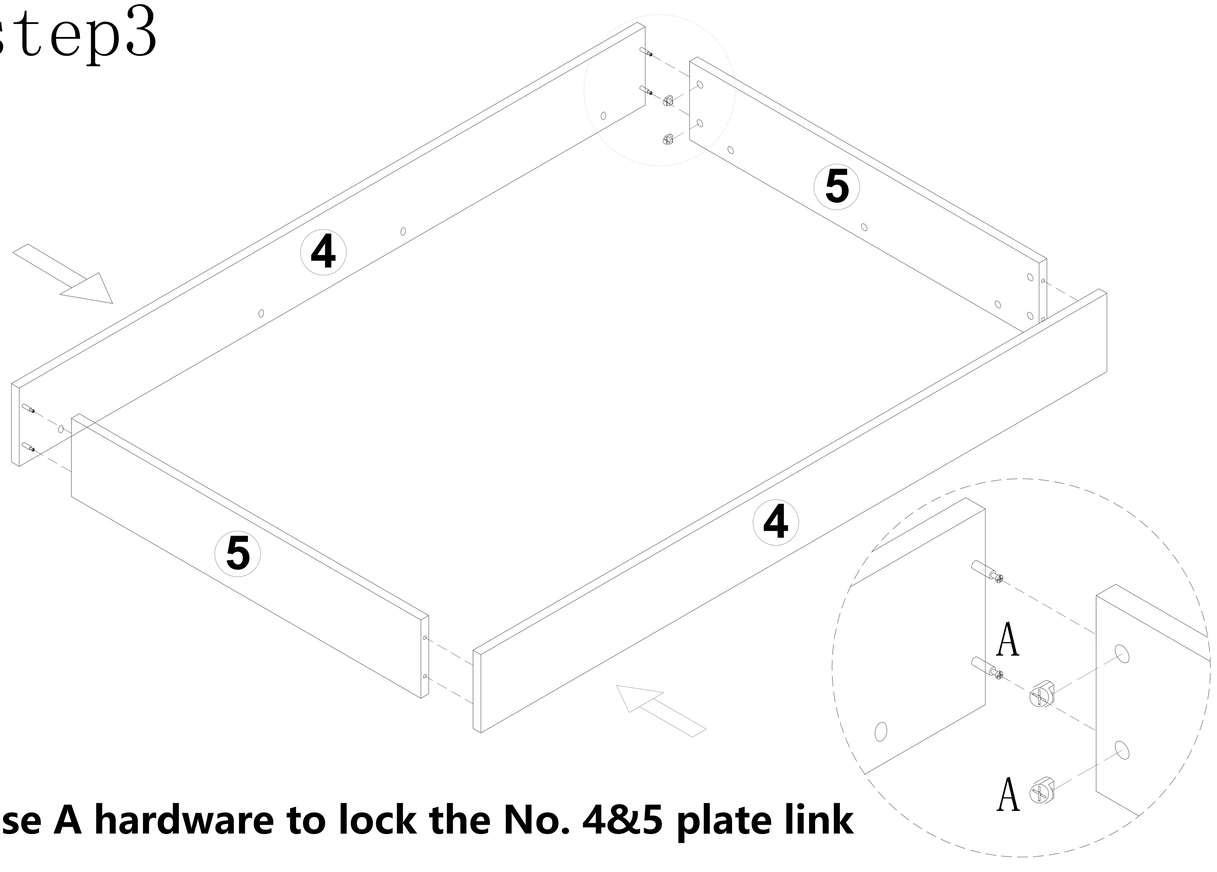

Use A hardware to lock the No. 4&5 plate link

step4

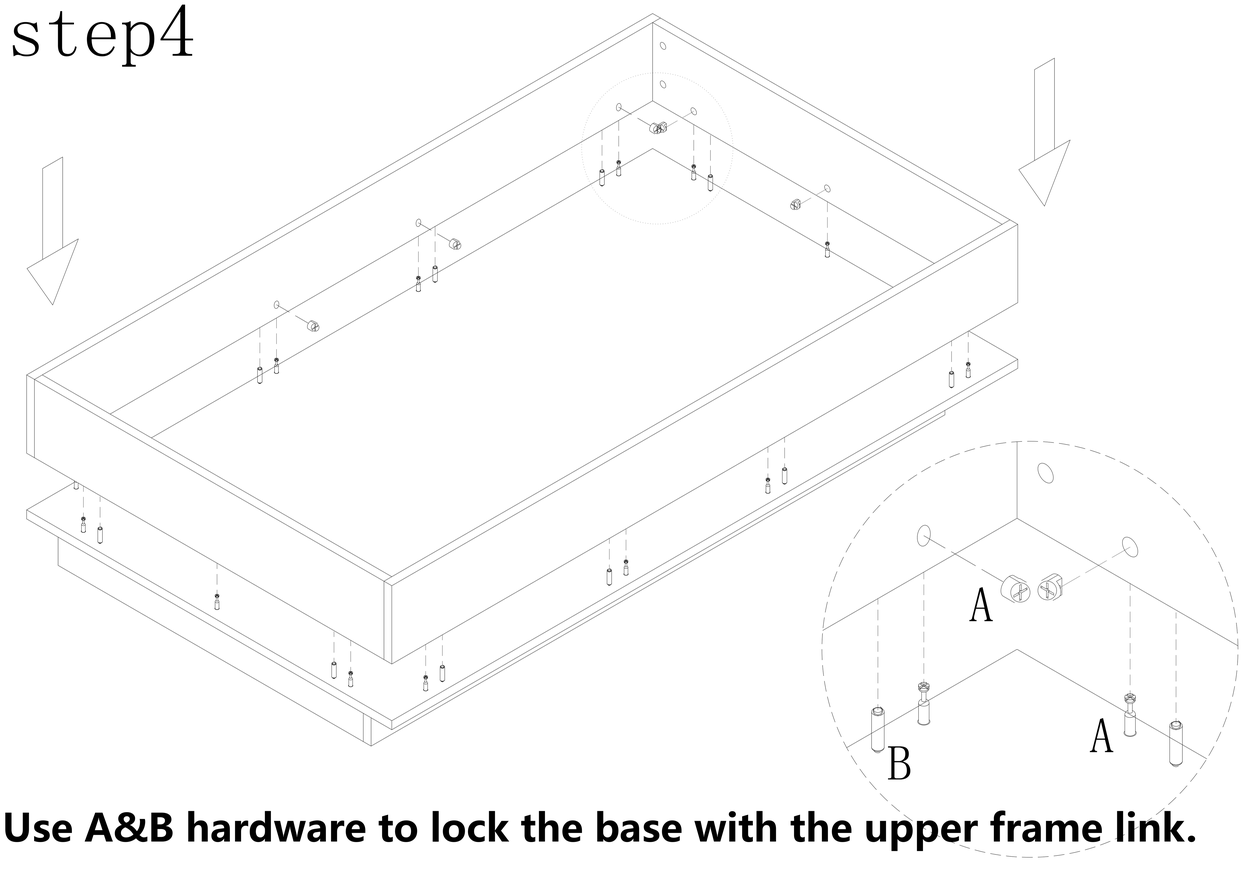

Use A&B hardware to lock the base with the upper frame link.

step5

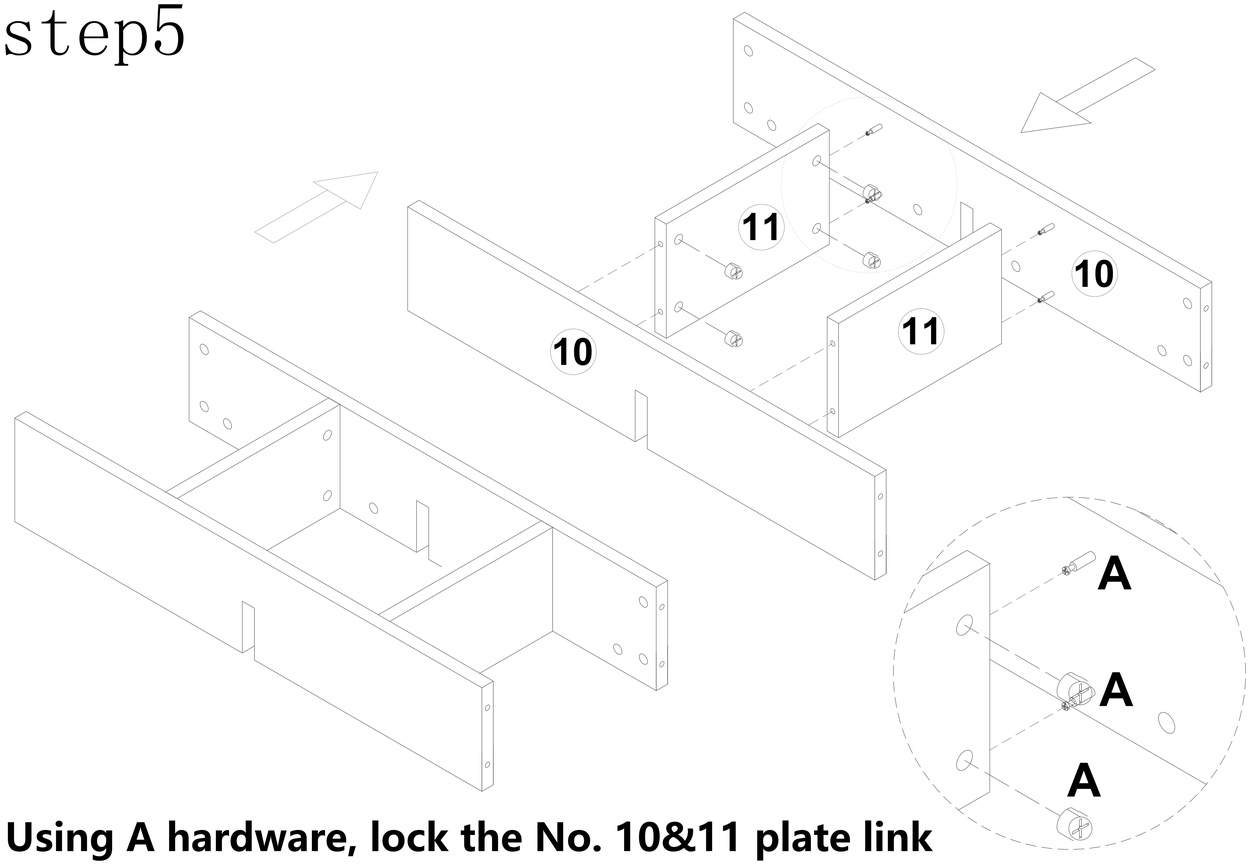

Using A hardware, lock the No. 10&11 plate link

step6

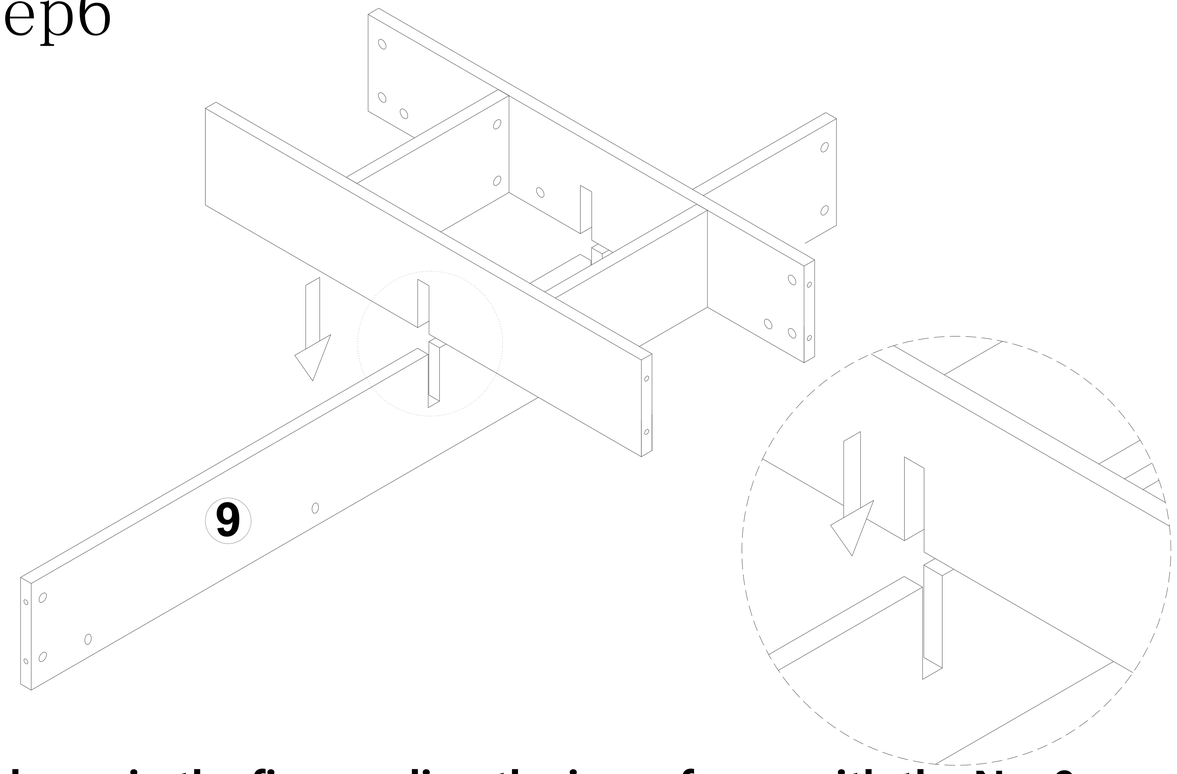

As shown in the figure, align the inner frame with the No. 9 plate and install it notched.

step7

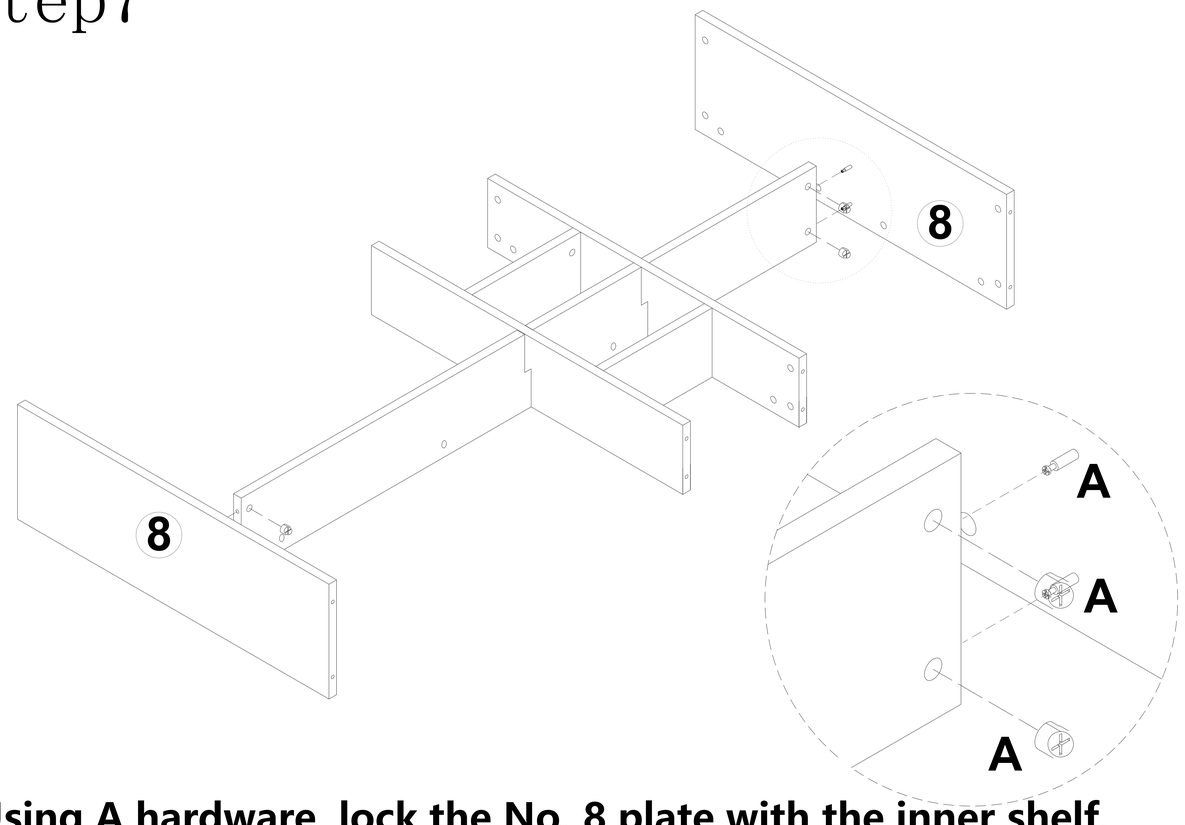

Using A hardware, lock the No. 8 plate with the inner shelf.

step8

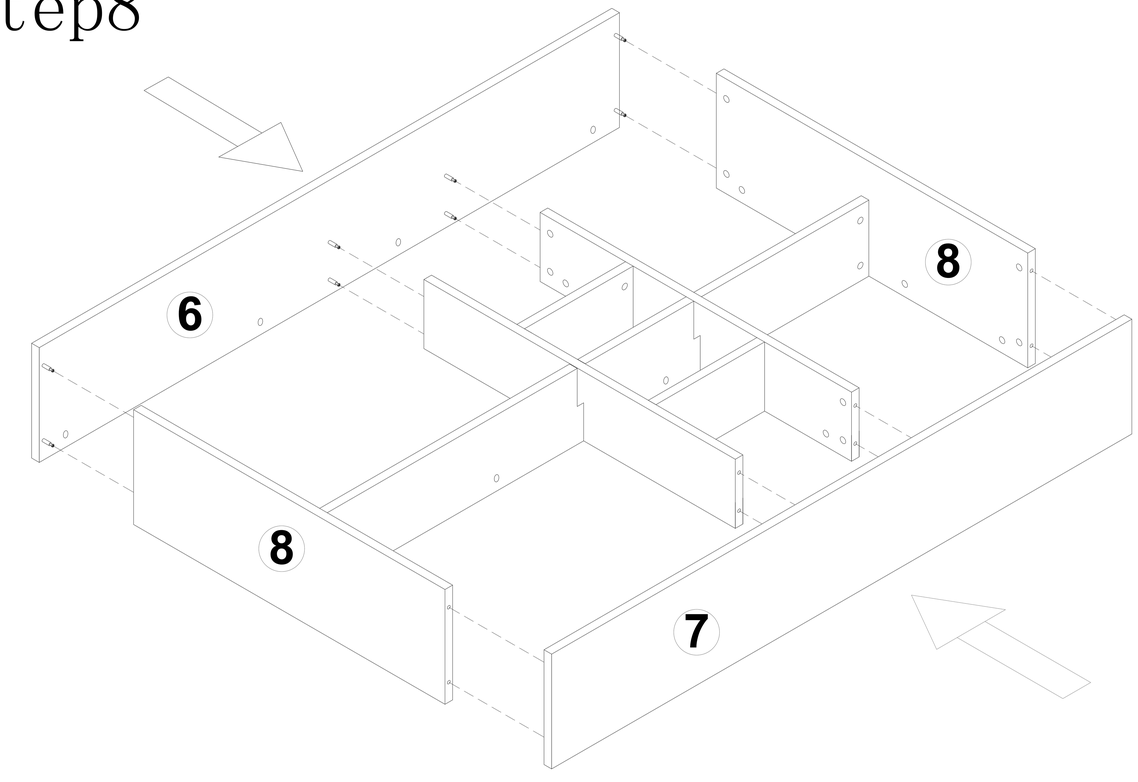

Using A hardware, lock the No. 6&7 plate with the inner frame.

step9

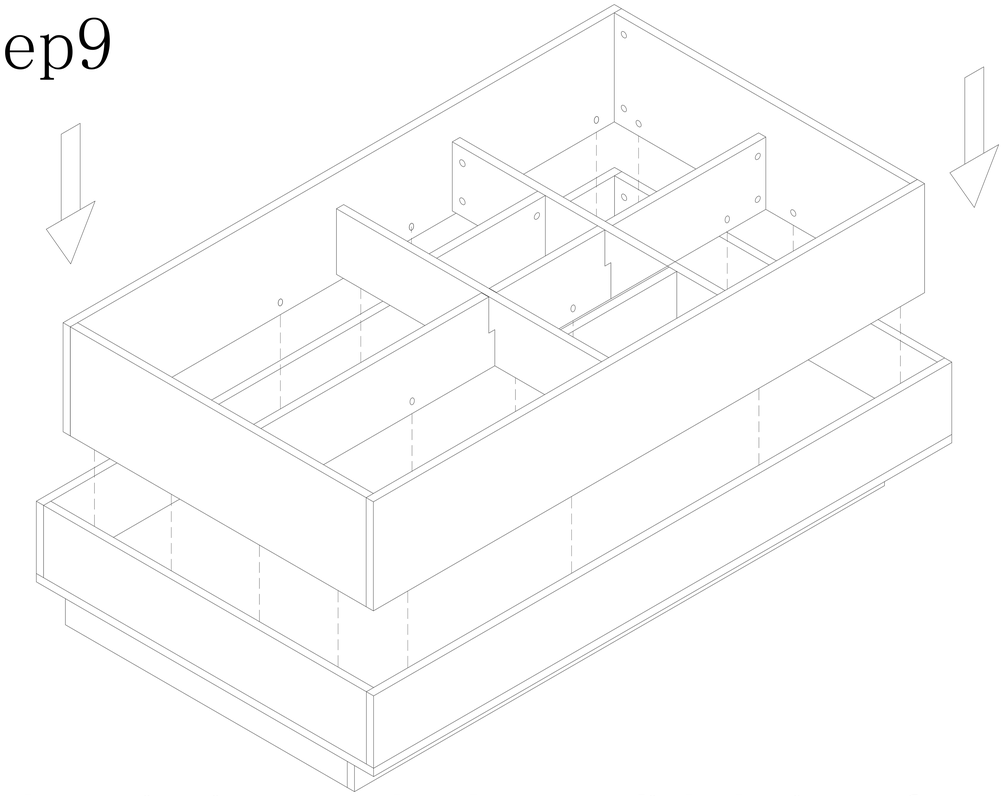

As shown in Fig. Use A hardware to link the inner frame with the base and lock it.

step10

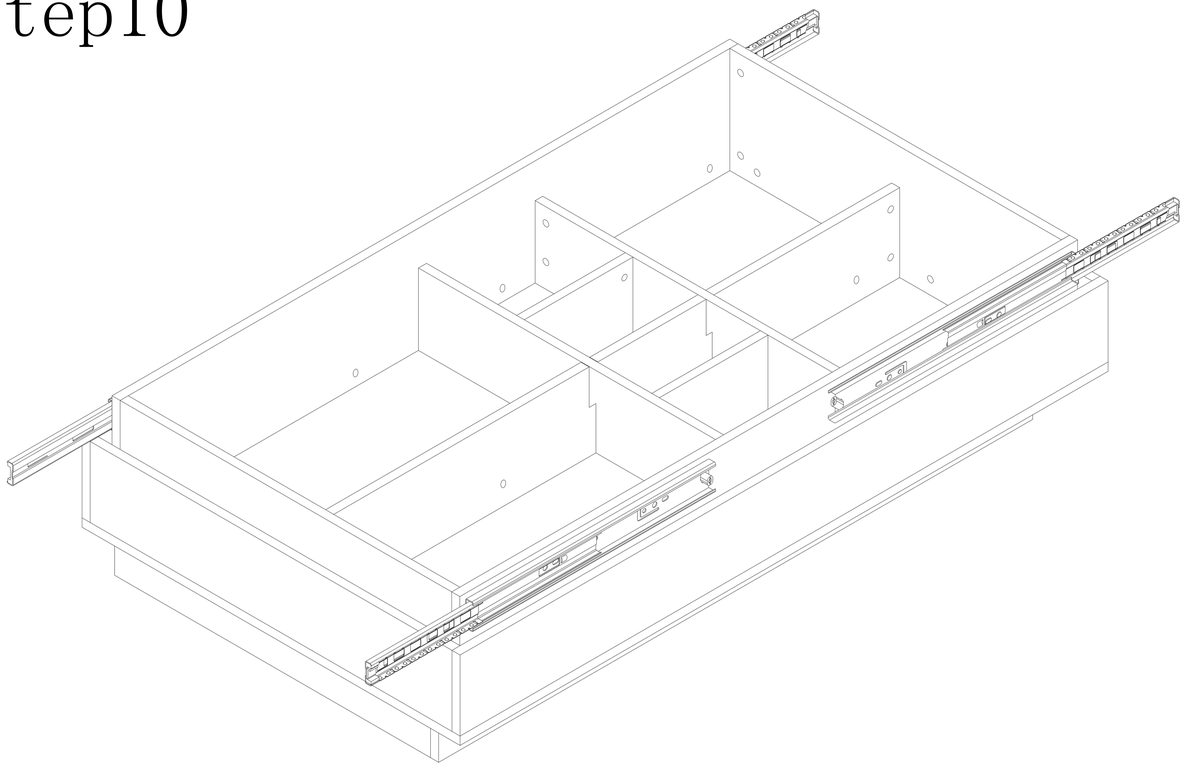

The cabinet frame is installed with good results

step11

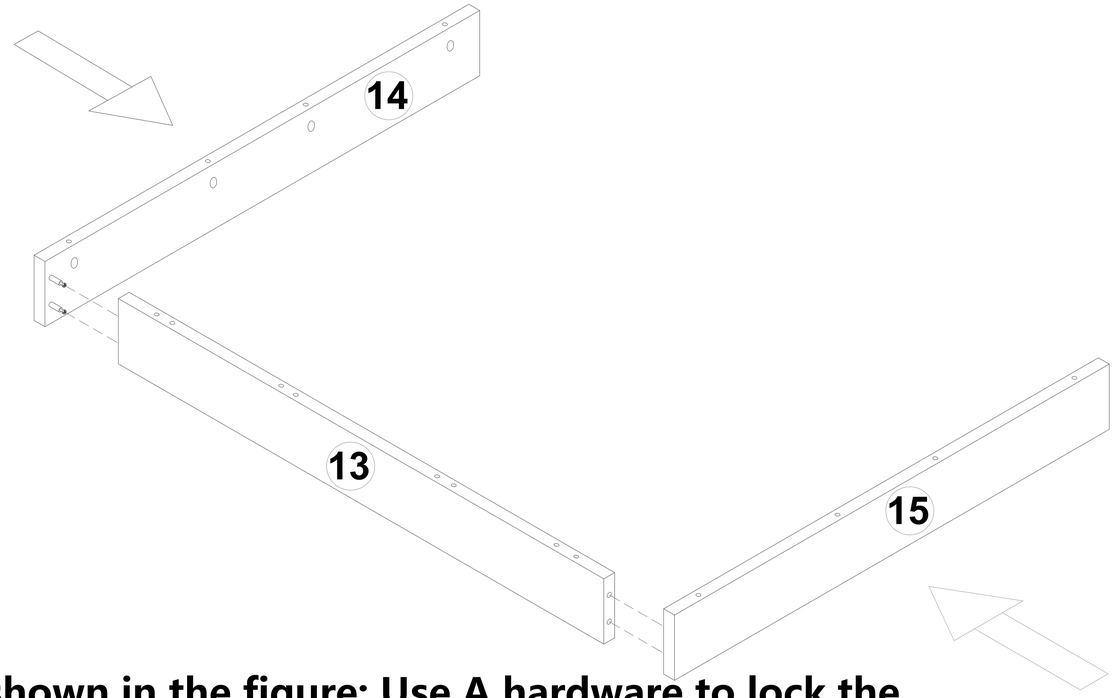

As shown in the figure: Use A hardware to lock the No. 13&14&15 plate link.

step12

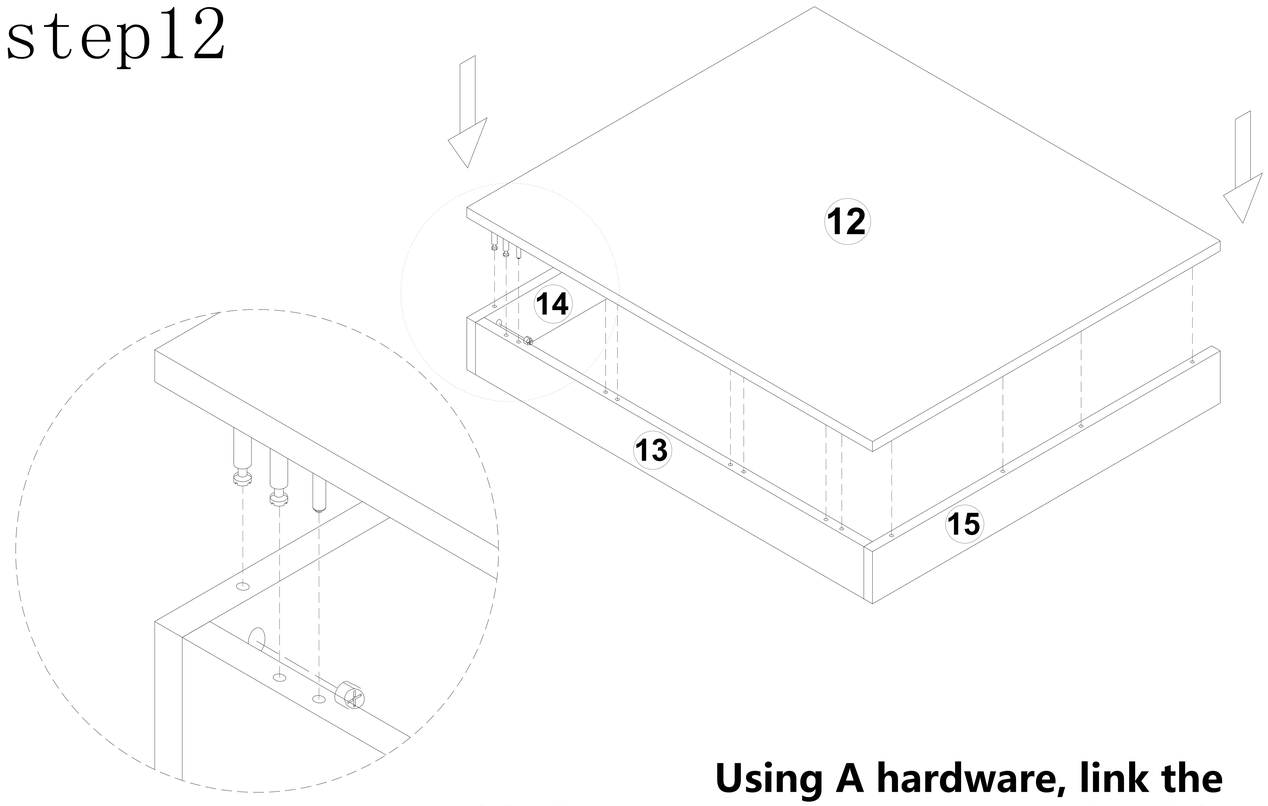

Using A hardware, link the No. 10 plate with the No. 13&14&15 plate and lock it.

step13

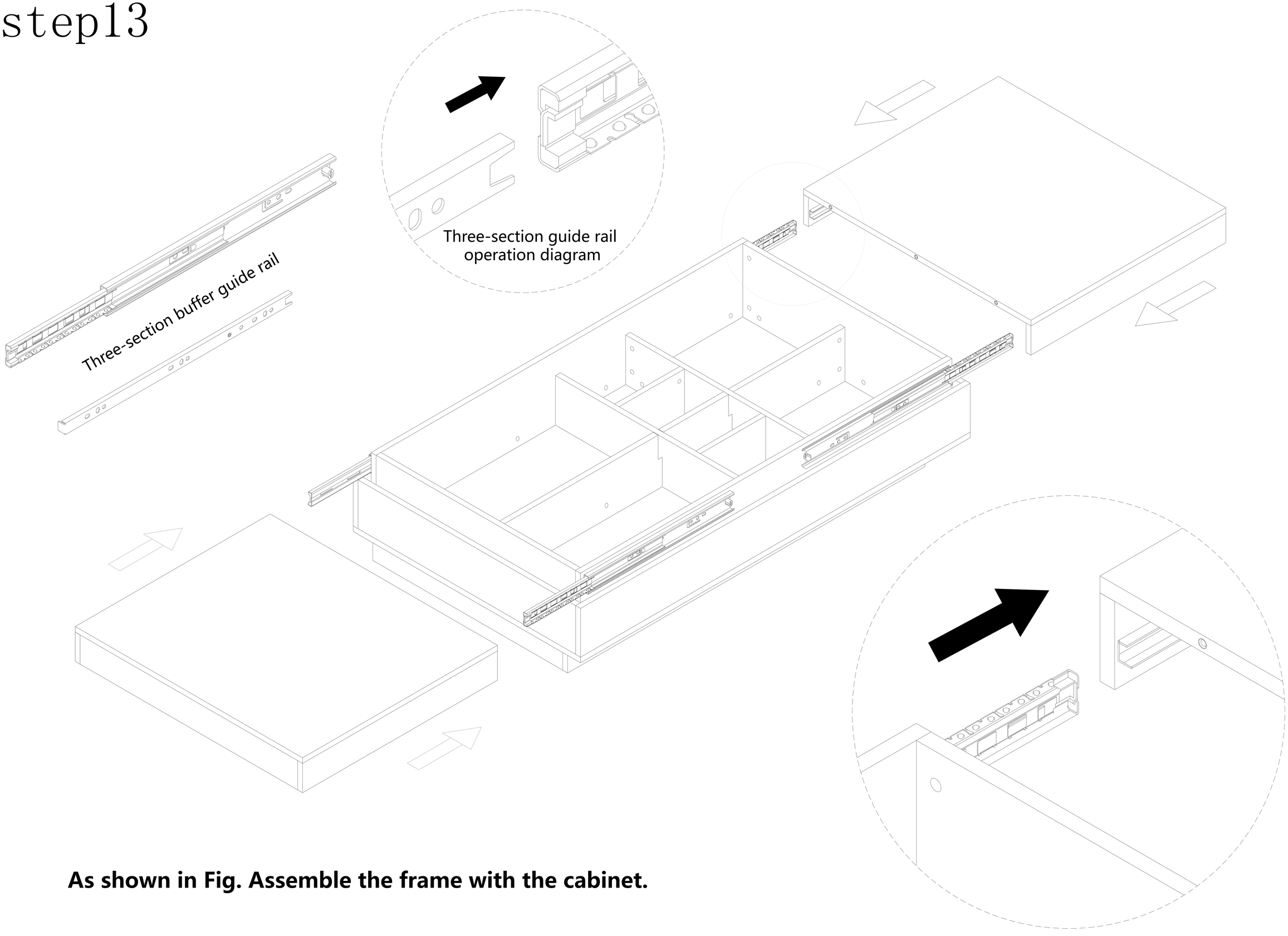

As shown in Fig. Assemble the frame with the cabinet.
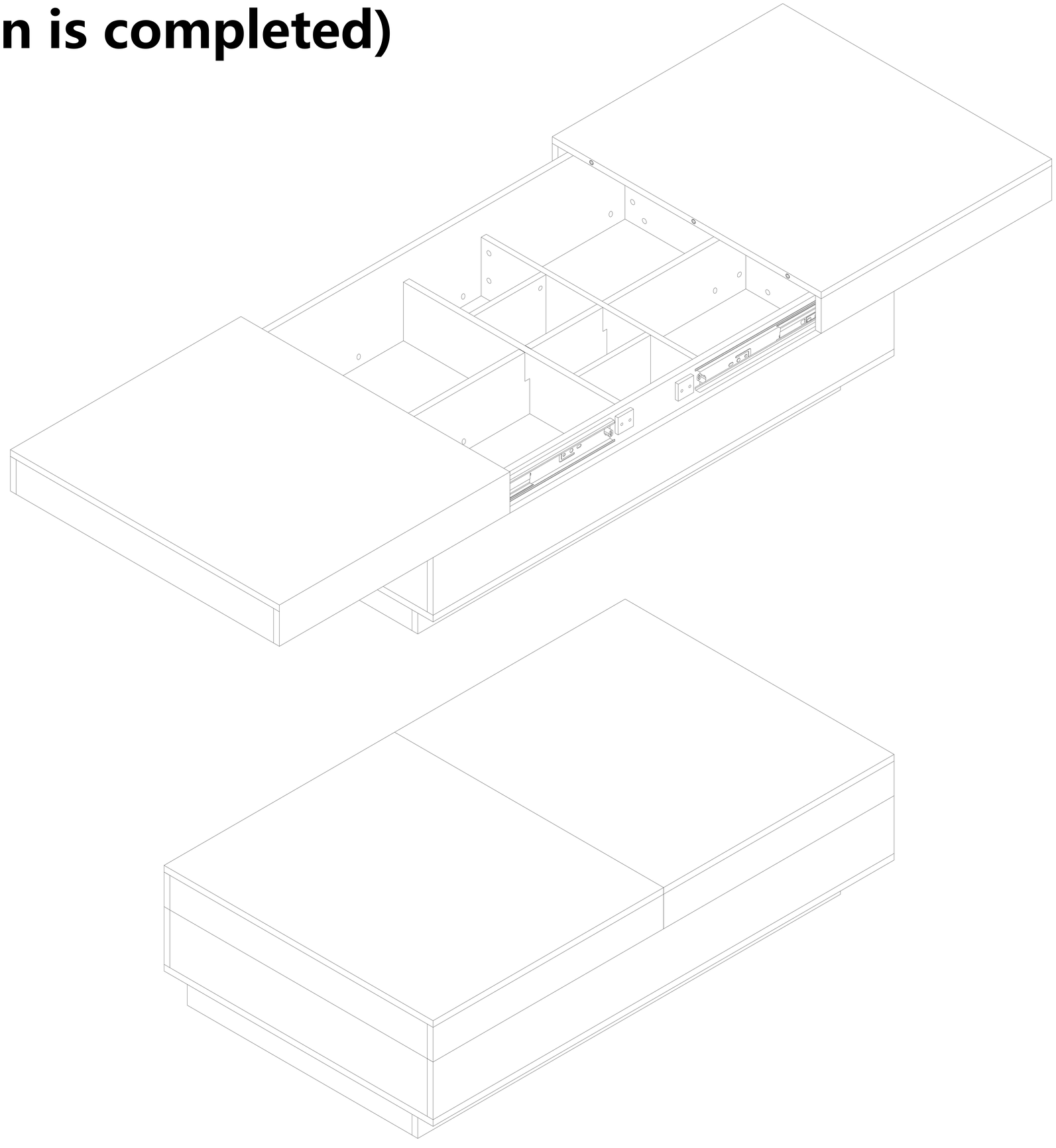
(installation is completed)