Sofa Assembly Instruction

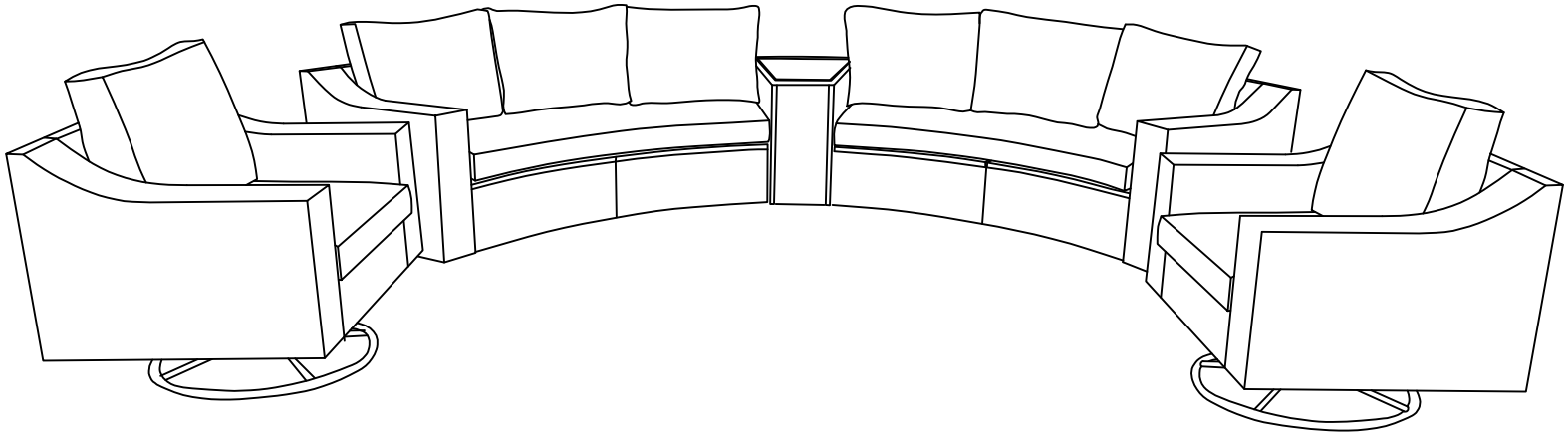

Dear Customer,

After receiving the product, please check all the accessory codes and quantities according to the instruction manual, if there is any omission, please contact us in time. We will provide solutions for you.

box 1

Ⓐ Right Armrests 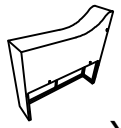 x2	Ⓑ Left Armrests 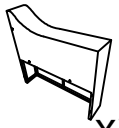 x2	Ⓙ Left Armrests  x1	Ⓣ Right Armrests  x1	Ⓔ Seat cushion  x2	Ⓖ Back cushion  x8	Ⓧ Side panel  x2
Ⓨ Front panel  x1	Ⓩ Bottom panel  x1	ⓐ Door frame  x1	ⓑ Door panel  x1	ⓓ Top frame  x1	ⓔ Glass  x1	Ⓓ Back rest  x2

box 2

Ⓚ Seat 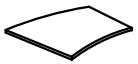 x2	Ⓛ Seat 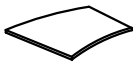 x1	Ⓤ Seat 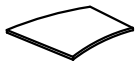 x1	Ⓜ Back rest  x2	Ⓝ Back rest  x1	Ⓥ Back rest  x1	Ⓞ Side panel  x2
Ⓟ Side panel  x1	Ⓦ Side panel  x1	Ⓠ Side panel 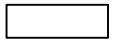 x2				

box 3

Ⓒ Seat  x2	Ⓗ ' T '-base 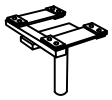 x2	Ⓘ Seat base 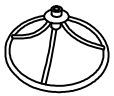 x2	Ⓡ Seat cushion  x2	Ⓢ Seat cushion cover 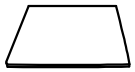 x2	Ⓕ Seat cushion cover 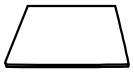 x2	
① Bolt  M6x35 x77	② Washer  x97	③ Allen Key 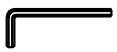 x1	④ Spanner 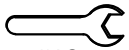 #13 x1	⑤ Spanner 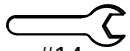 #14 x1	⑥ Bolt  M8x40 x8	⑦ Nut  M8 x8
⑧ Elastic Gasket  x8	⑨ Iron Piece  x8	⑩ Bolt  M6x40 x12	⑪ Bolt M6x55 x4	⑫ Nut M6 x4	⑬ Spanner M6 x1	

SOFA

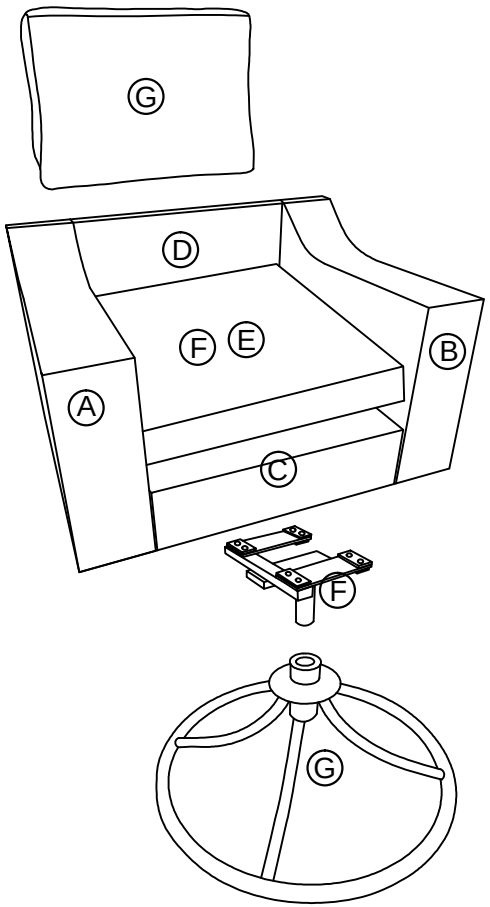

Main structure accessories

A Right Armrests  x1	B Left Armrests 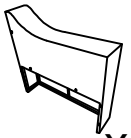 x1	C Seat 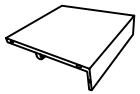 x1	D Back rest  x1	E Seat cushion 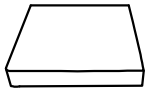 x1
F Seat cushion cover  x1	G Back cushion 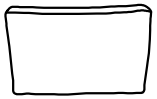 x1	H ' T '-base 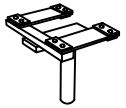 x1	I Seat base 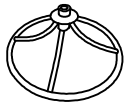 x1	

Hardware parts

1 Bolt  M6x35 x4	2 Washer  x10	3 Allen Key  x1	4 Spanner 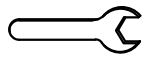 #13 x1	5 Spanner 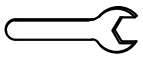 #14 x1
6 Bolt 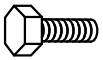 M8x40 x4	7 Washer  x4	8 Elastic Gasket  x4	9 Iron Piece  x4	10 Bolt  M6x40 x6

Assembly Instruction

STEP1

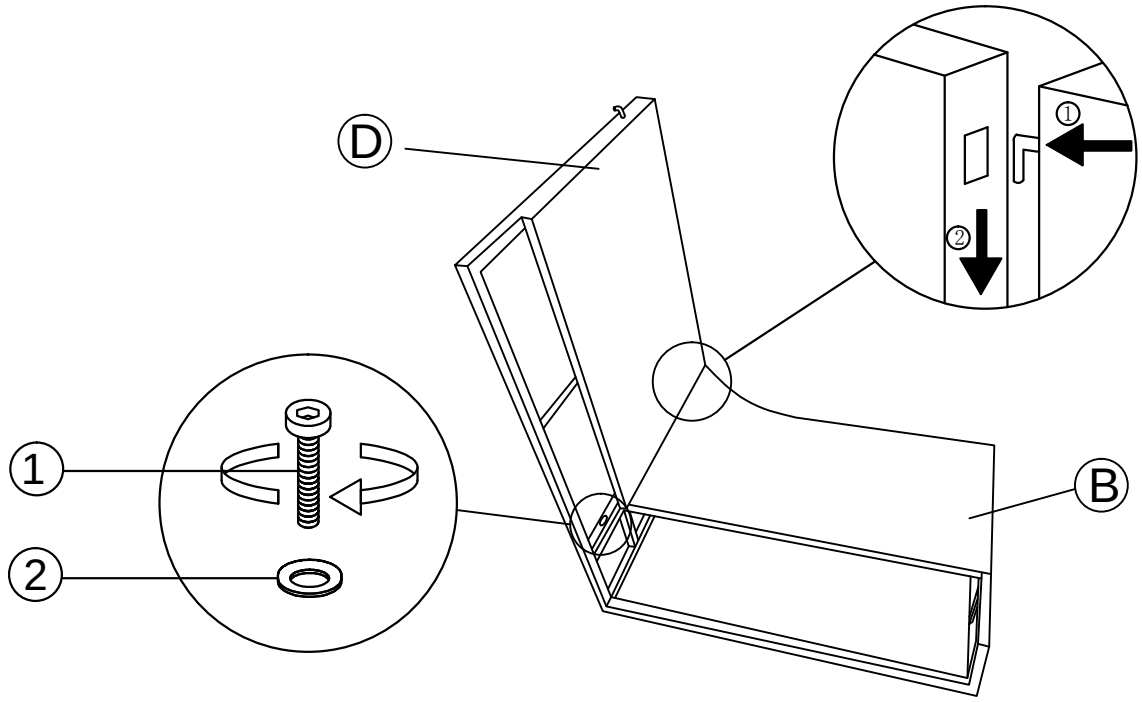

Ⓑ Left Armrests	Ⓓ Back rest	① Bolt	② Washer
		 M6x35	
x1	x1	x1	x1

Place the Armrests on the ground before assemble.
Please DO NOT tighten the screws at this step yet. Wait to tighten all the screws until the product is fully installed.

Assembly Instruction

STEP2

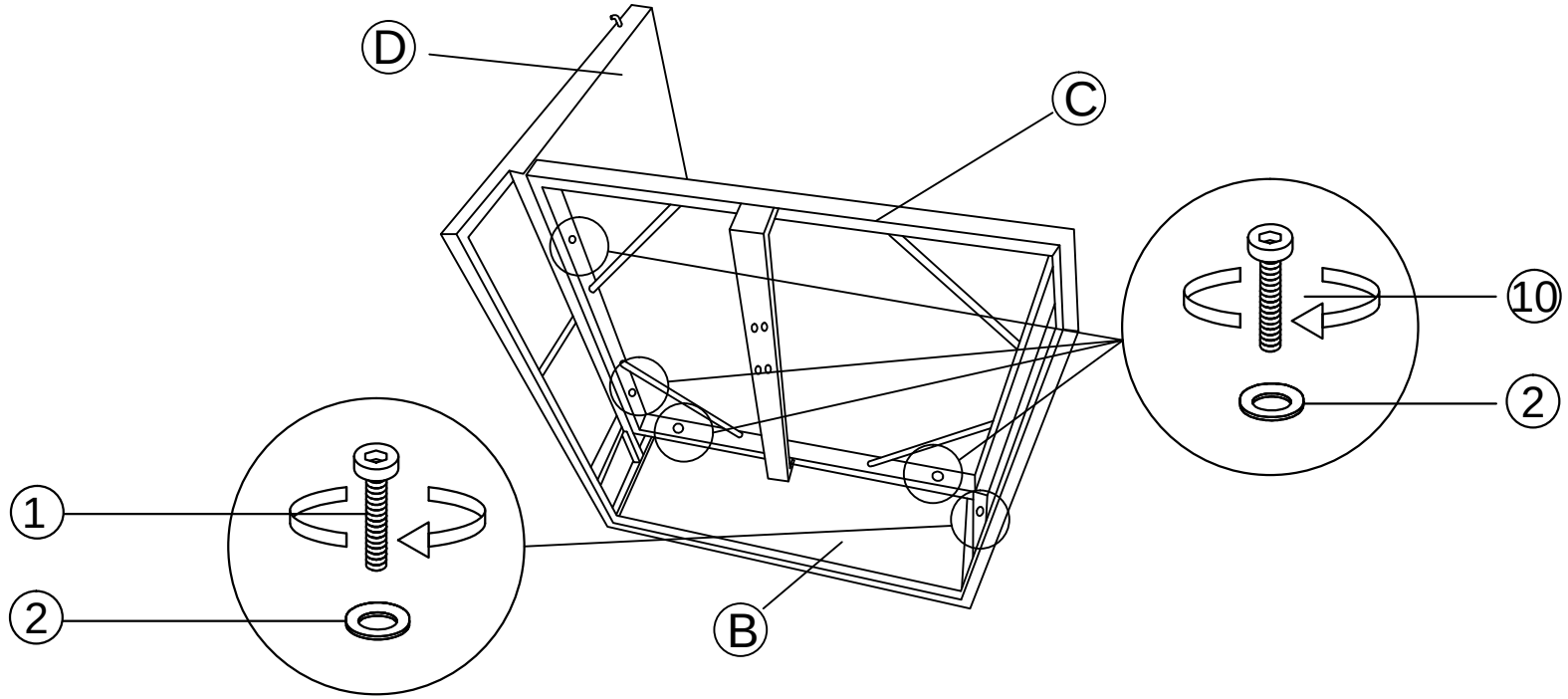

Ⓒ Seat	① Bolt	⑩ Bolt	② Washer
x1	M6x35 x1	M6x40 x4	x6

Please DO NOT tighten the screws at this step yet. Wait to tighten all the screws until the product is fully installed.

Assembly Instruction

STEP3

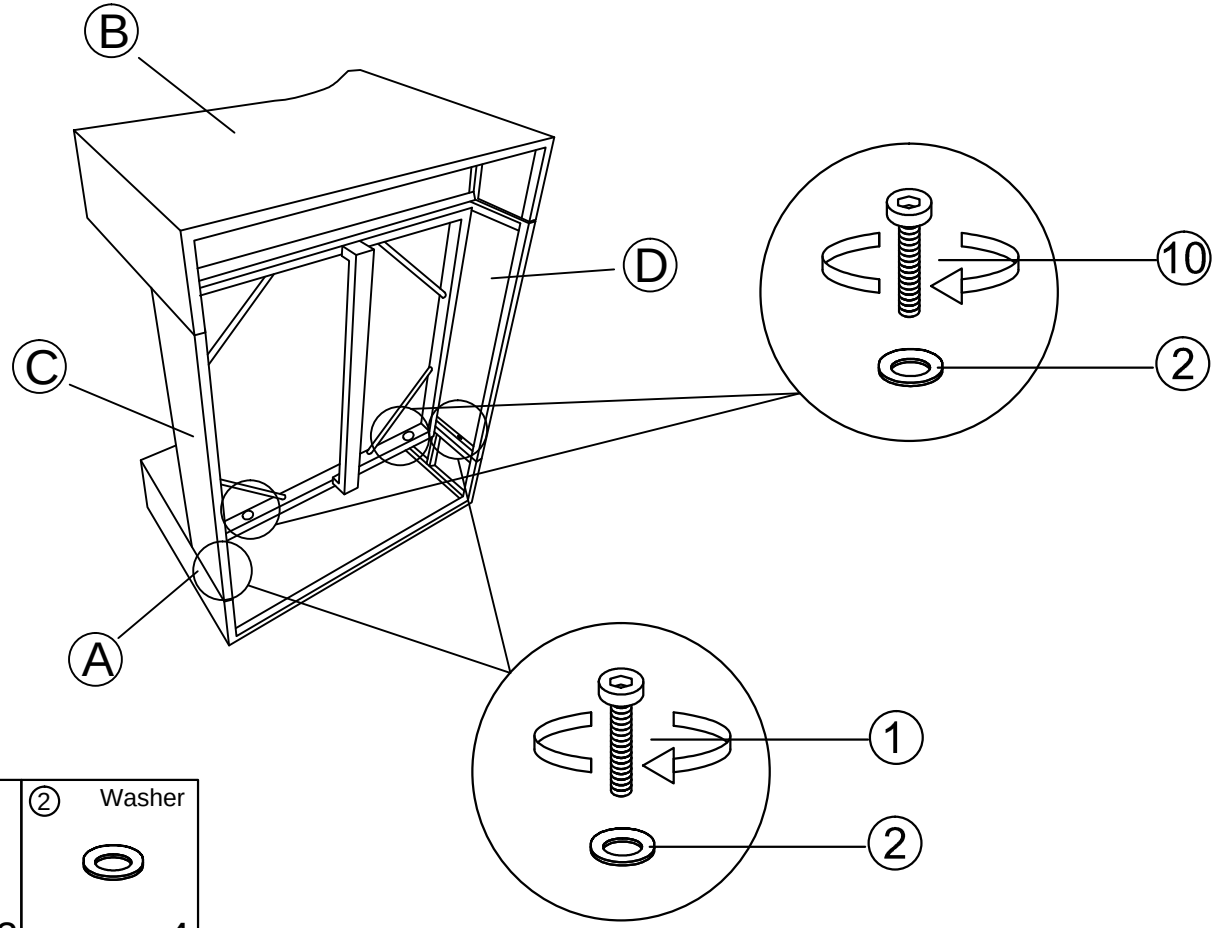

Ⓐ Right Armrests	① Bolt	⑩ Bolt	② Washer
			
x1	M6x35 x2	M6x40 x2	x4

Lock the screws in this step .

Assembly Instruction

STEP4

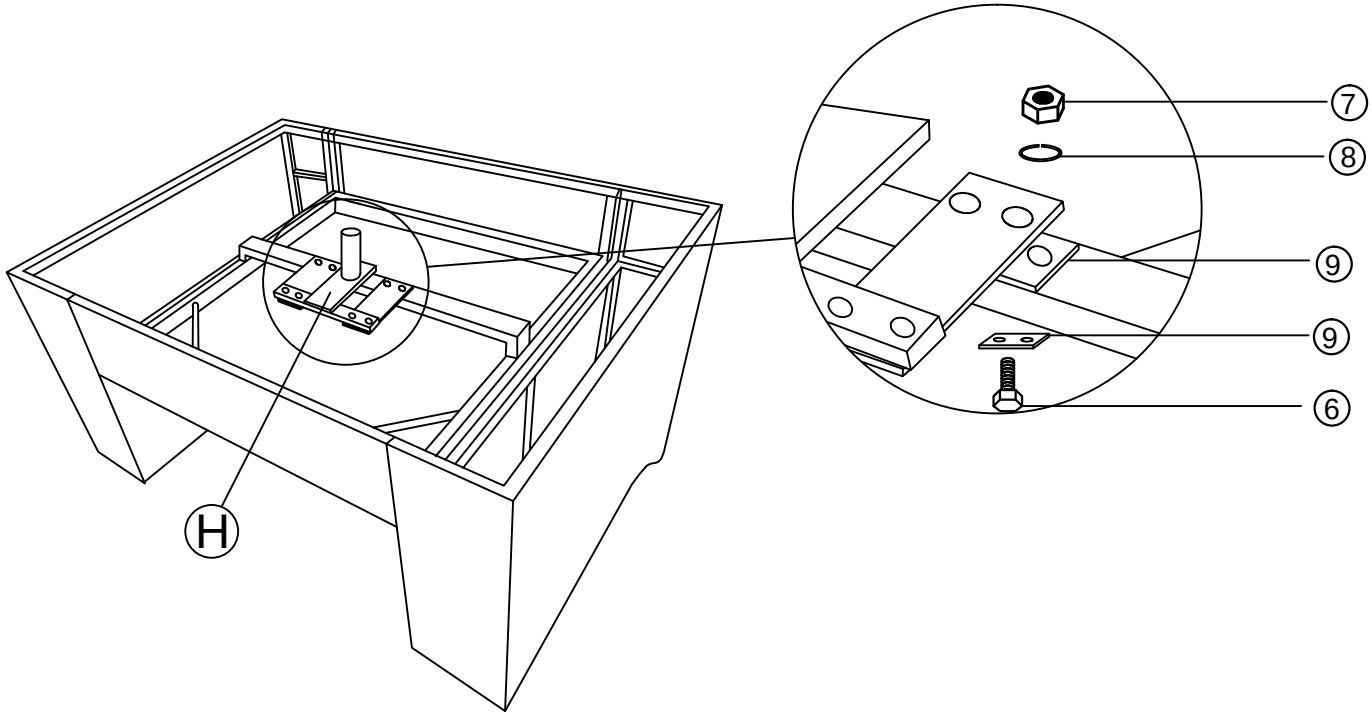

⑥ Bolt	⑦ Washer	⑧ Elastic Gasket	⑨ Iron Piece	④ Spanner	⑤ Spanner	Ⓗ ' T '-base
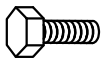 M8x40 x4	 x4	 x4	 x4	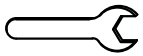 #13 x1	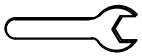 #14 x1	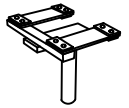 x1

Lock the screws in this step .

Assembly Instruction

STEP5

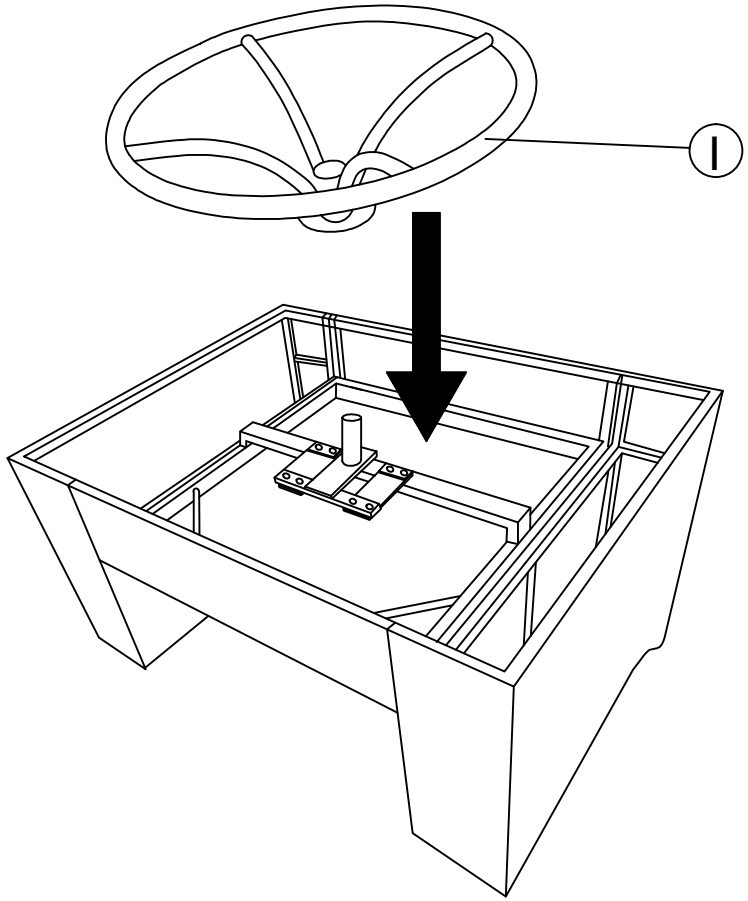

I Seat base

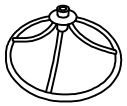

x1

Assembly Instruction

STEP6

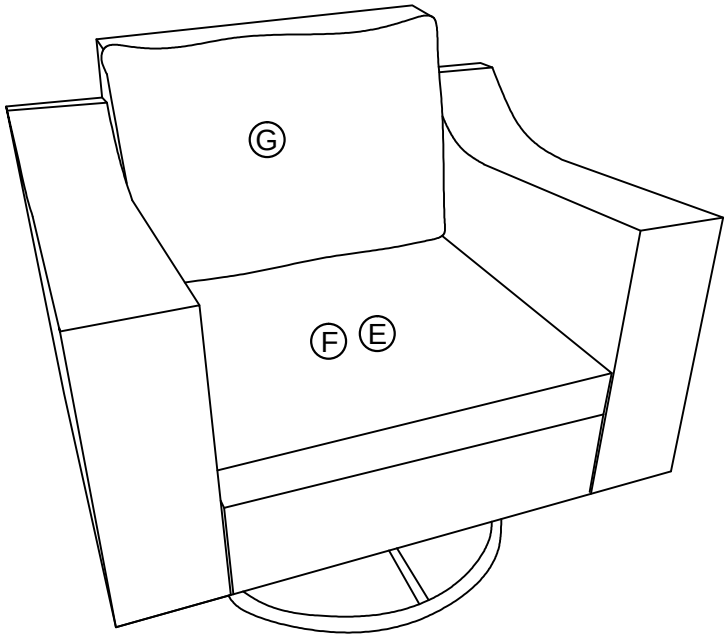

E Seat cushion  x1	F Seat cushion cover  x1	G Back cushion  x1

RIGHT SOFA

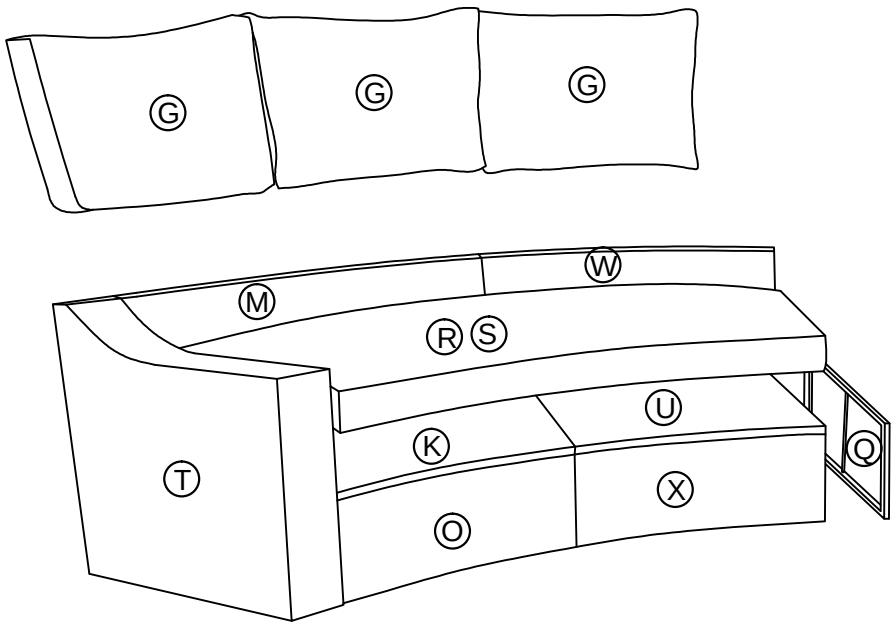

Main structure accessories

T Right Armrests  x1	K Seat 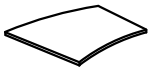 x1	U Seat  x1	M Back rest  x1
V Back rest 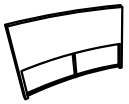 x1	O Side panel  x1	W Side panel  x1	Q Side panel 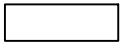 x1
R Seat cushion 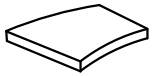 x1	S Seat cushion cover  x1	G Back cushion  x3	

Hardware parts

1 Bolt  M6x35 x26	2 Washer  x30	3 Allen Key  x1	11 Bolt  M6x55 x2	12 Nut  M6 x2	13 Spanner 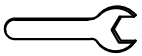 M6 x1

Assembly Instruction

STEP1

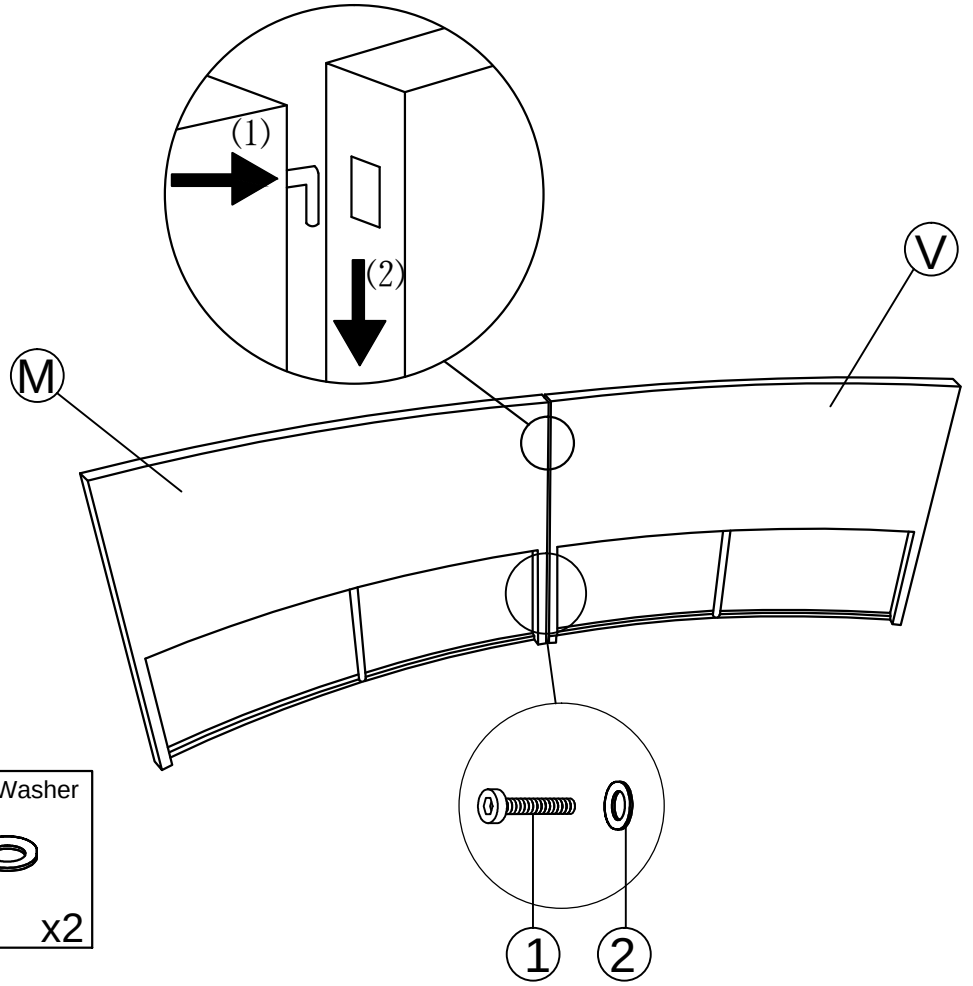

Ⓜ Back rest	Ⓥ Back rest	① Bolt	② Washer
x1	x1	M6x35 x2	x2

Please DO NOT tighten the screws at this step yet. Wait to tighten all the screws until the product is fully installed.

Assembly Instruction

STEP2

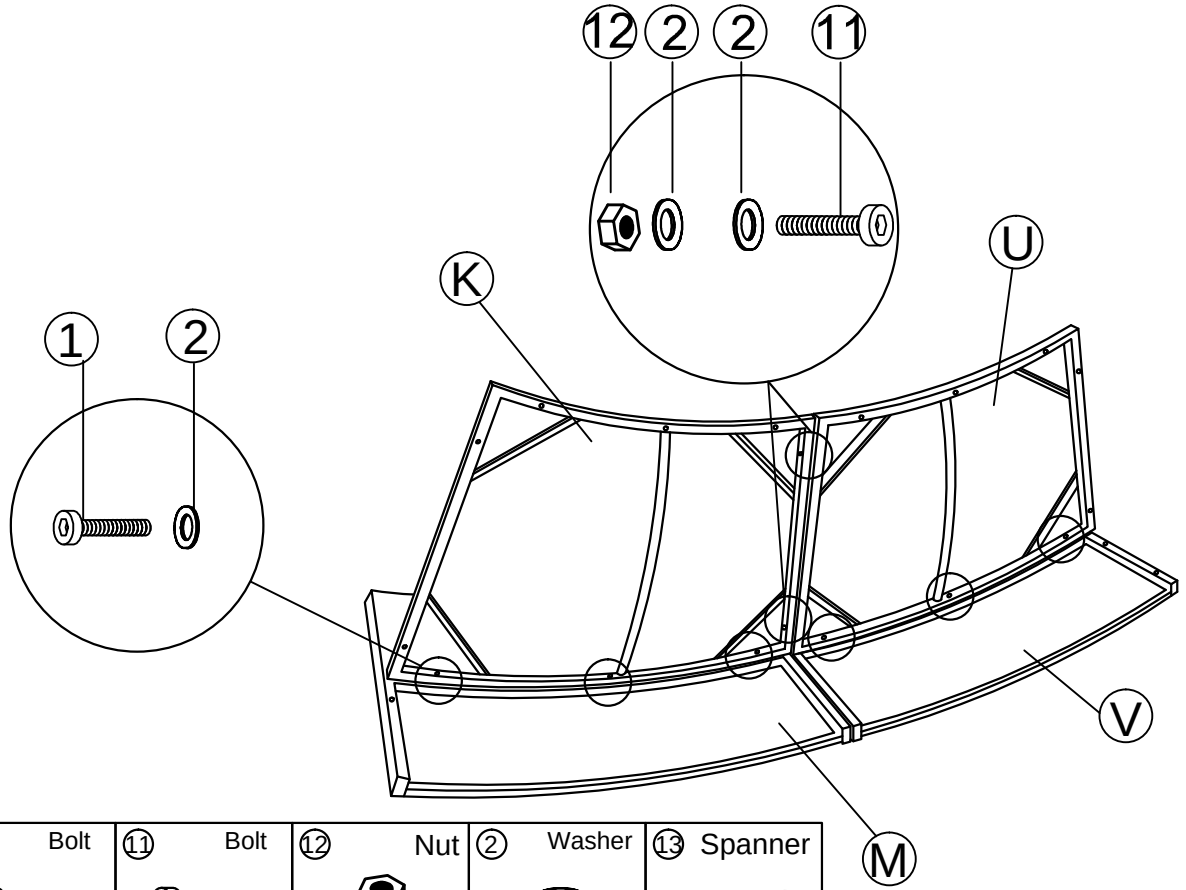

Ⓚ Seat	Ⓤ Seat	① Bolt	⑪ Bolt	⑫ Nut	② Washer	⑬ Spanner
x1	x1	M6x35 x6	M6x55 x2	M6 x2	x10	x1

Please DO NOT tighten the screws at this step yet. Wait to tighten all the screws until the product is fully installed.

Assembly Instruction

STEP3

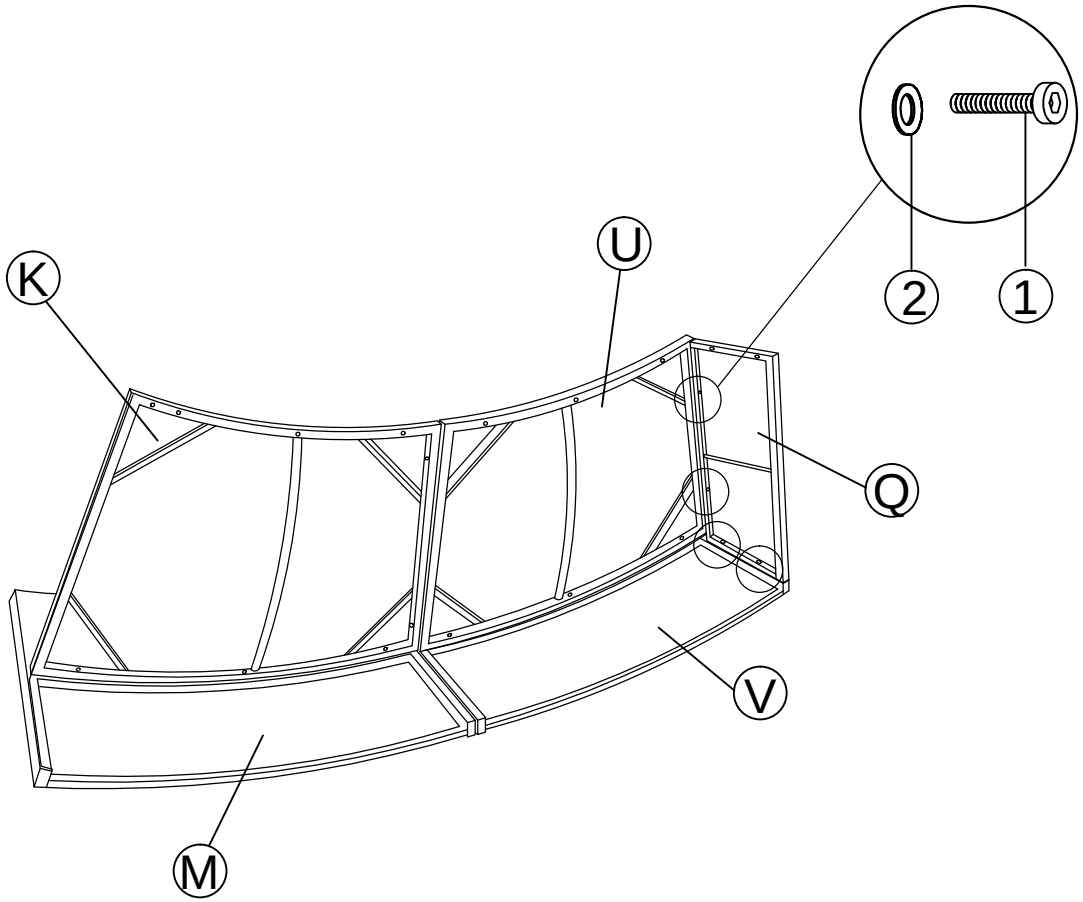

Q Side panel	① Bolt	② Washer
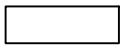	 M6x35	
x1	x4	x4

Please DO NOT tighten the screws at this step yet. Wait to tighten all the screws until the product is fully installed.

Assembly Instruction

STEP4

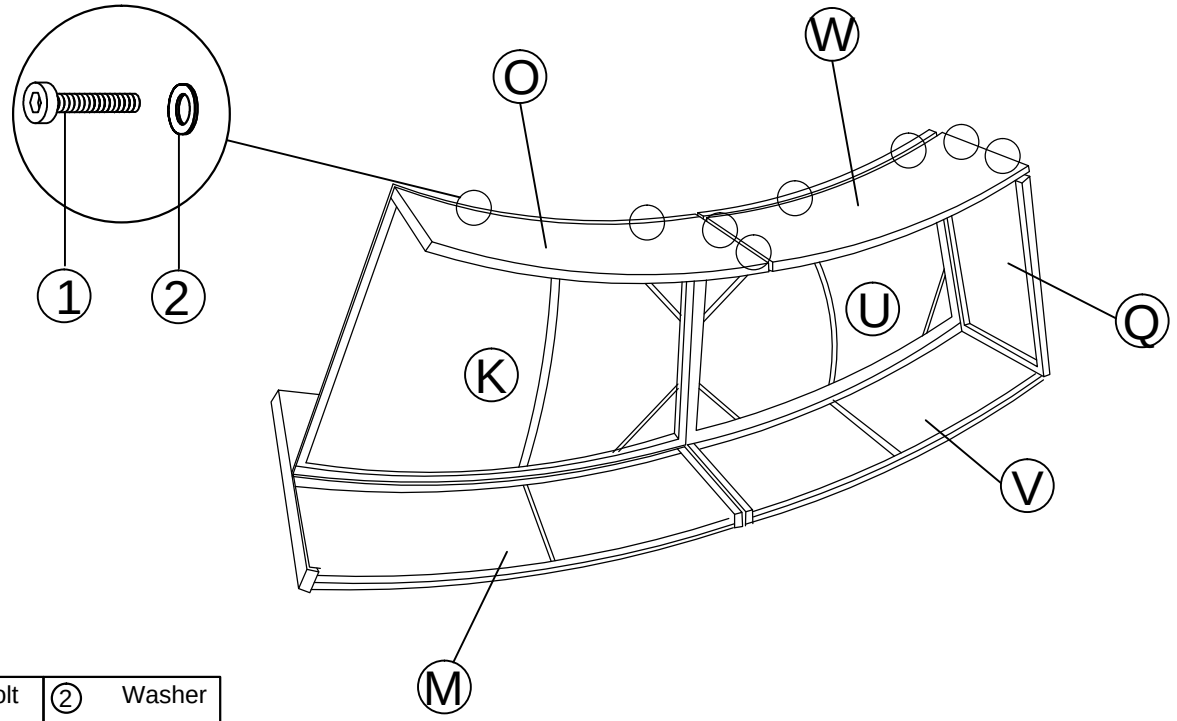

Ⓞ Side panel	Ⓦ Side panel	① Bolt	② Washer
x1	x1	M6x35 x8	x8

Please DO NOT tighten the screws at this step yet. Wait to tighten all the screws until the product is fully installed.

Assembly Instruction

STEP5

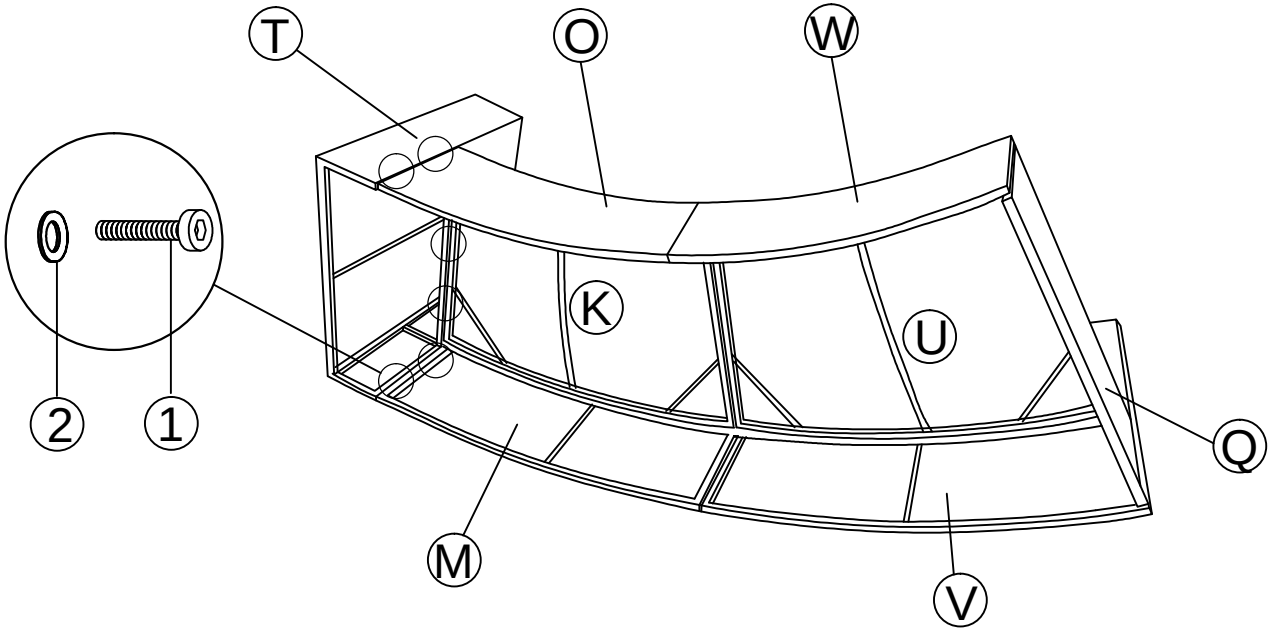

T Left Armrests	1 Bolt	2 Washer
	 M6x35	
x1	x6	x6

Lock the screws in this step .

Assembly Instruction

STEP6

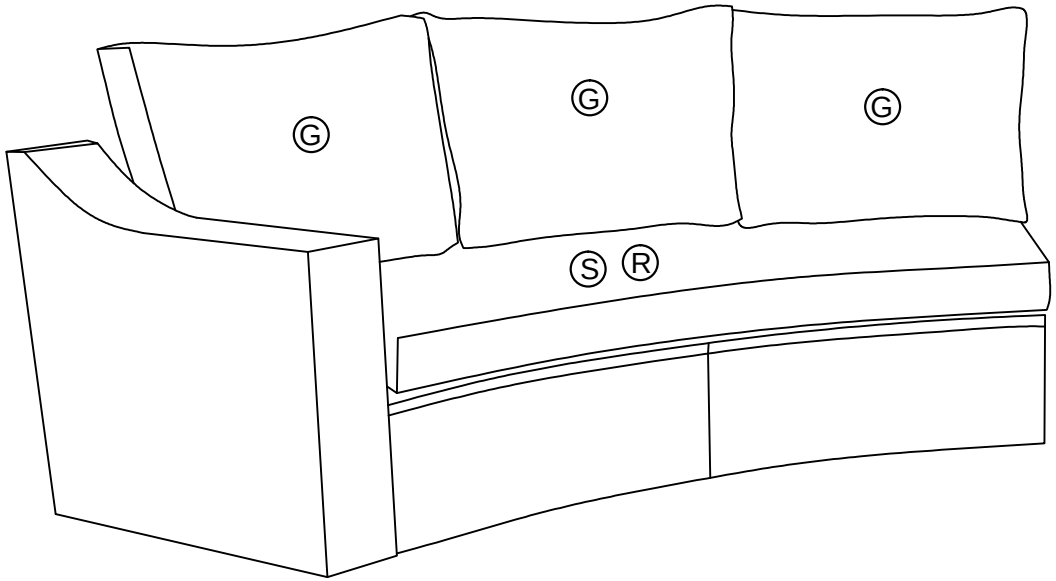

Ⓡ Seat cushion	Ⓢ Seat cushion cover	Ⓖ Back cushion
x1	x1	x3

LEFT SOFA

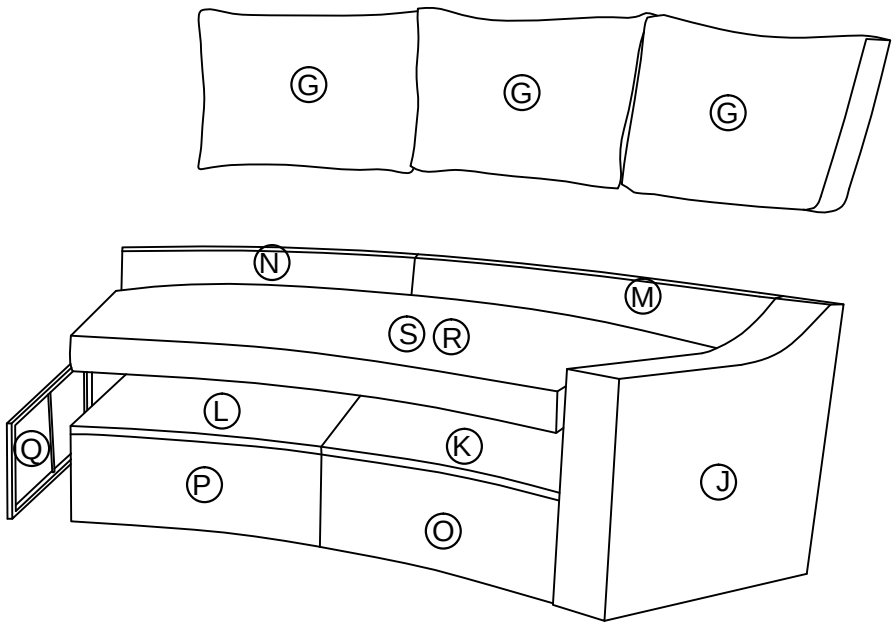

Main structure accessories

Ⓙ Left Armrests  x1	Ⓚ Seat 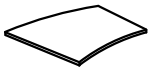 x1	Ⓛ Seat 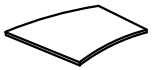 x1	Ⓜ Back rest  x1
Ⓝ Back rest 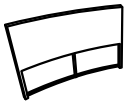 x1	Ⓞ Side panel  x1	Ⓟ Side panel  x1	Ⓠ Side panel 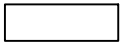 x1
Ⓡ Seat cushion 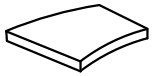 x1	Ⓢ Seat cushion cover  x1	Ⓖ Back cushion  x3	

Hardware parts

① Bolt  M6x35 x26	② Washer  x30	③ Allen Key  x1	⑪ Bolt  M6x55 x2	⑫ Nut  M6 x2	⑬ Spanner 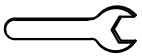 M6 x1

Assembly Instruction

STEP1

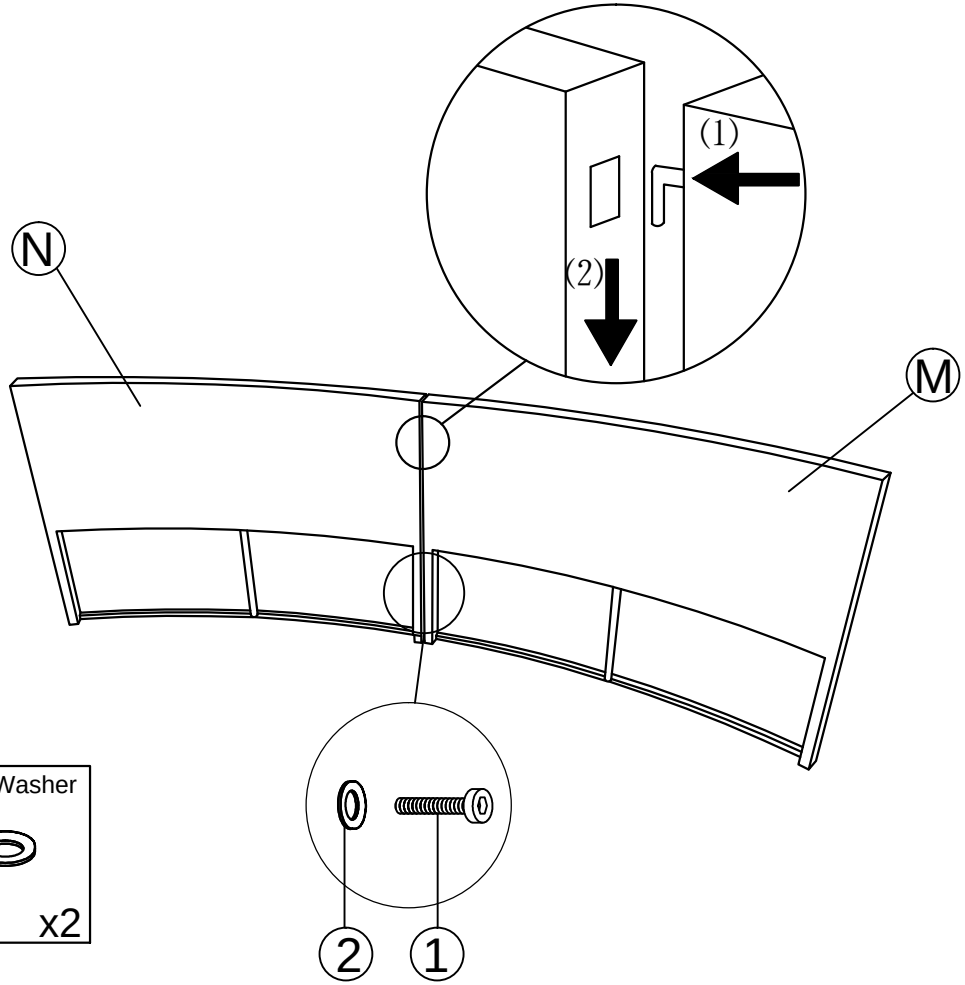

Ⓜ Back rest	Ⓝ Back rest	① Bolt	② Washer
x1	x1	M6x35 x2	x2

Please DO NOT tighten the screws at this step yet. Wait to tighten all the screws until the product is fully installed.

Assembly Instruction

STEP2

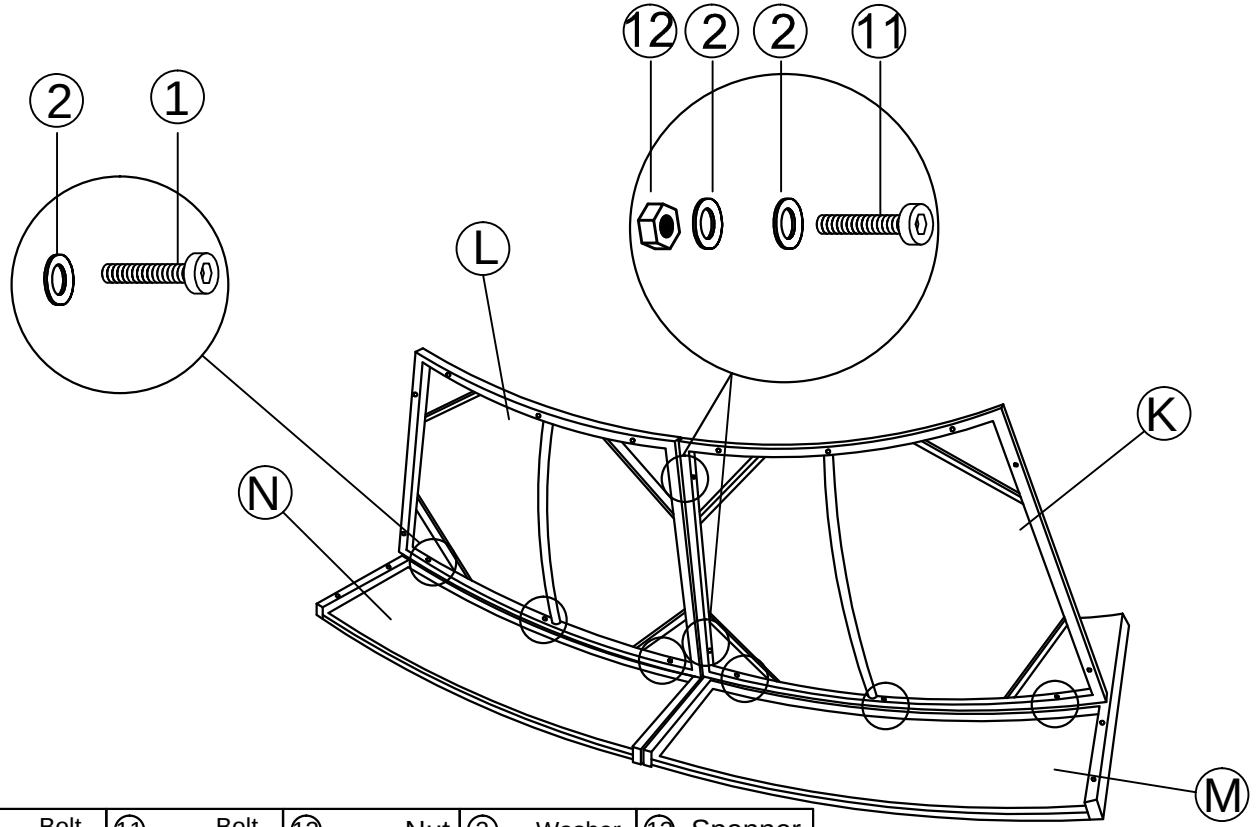

K Seat	L Seat	1 Bolt	11 Bolt	12 Nut	2 Washer	13 Spanner
x1	x1	M6x35 x6	M6x55 x2	M6 x2	x10	x1

Please DO NOT tighten the screws at this step yet. Wait to tighten all the screws until the product is fully installed.

Assembly Instruction

STEP3

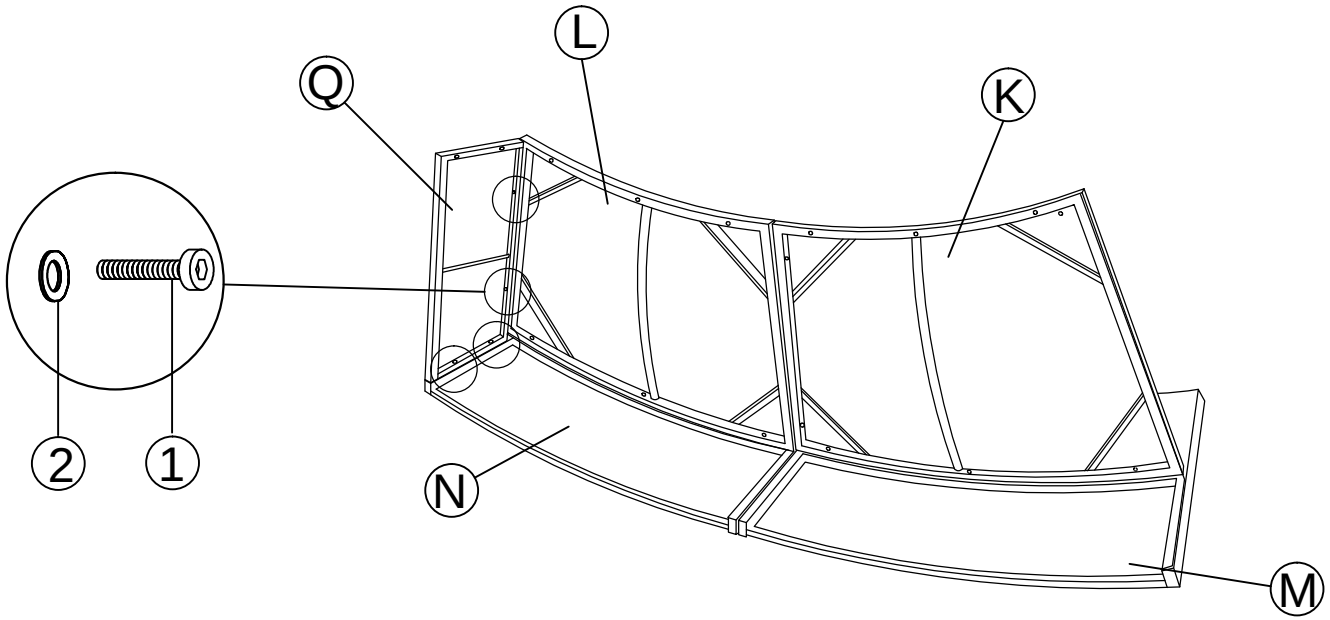

Q Side panel	① Bolt	② Washer
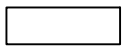		
x1	M6x35 x4	x4

Please DO NOT tighten the screws at this step yet. Wait to tighten all the screws until the product is fully installed.

Assembly Instruction

STEP4

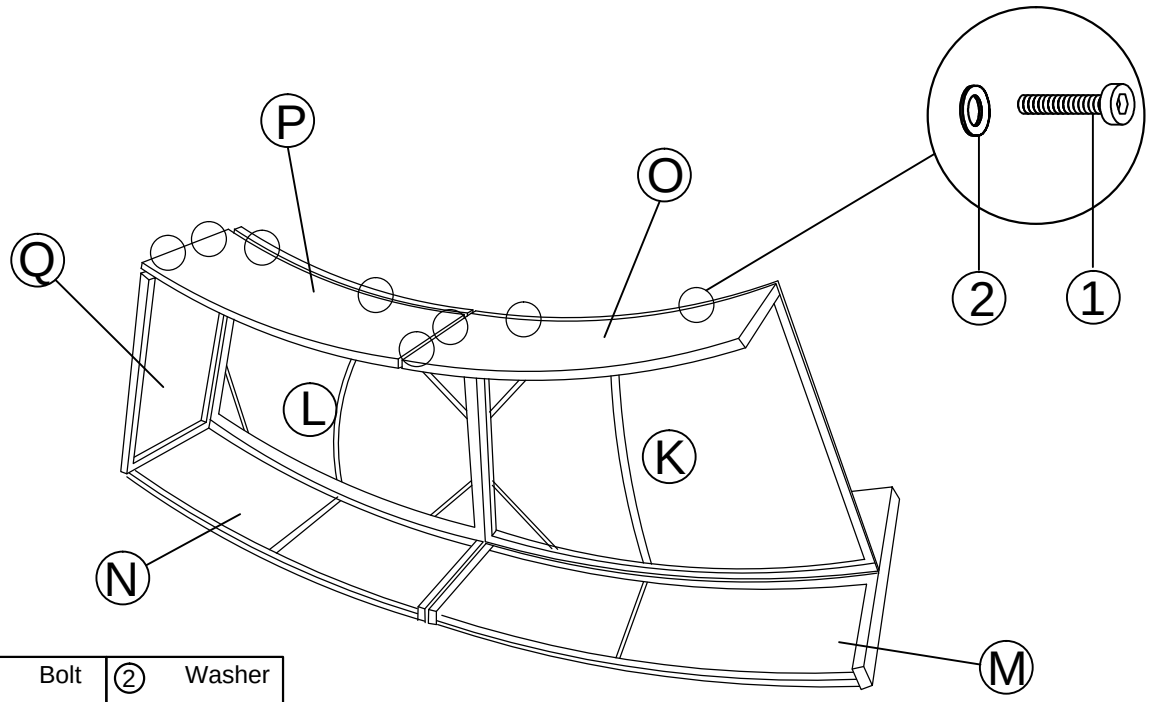

Ⓞ Side panel	Ⓟ Side panel	① Bolt	② Washer
x1	x1	M6x35 x8	x8

Please DO NOT tighten the screws at this step yet. Wait to tighten all the screws until the product is fully installed.

Assembly Instruction

STEP5

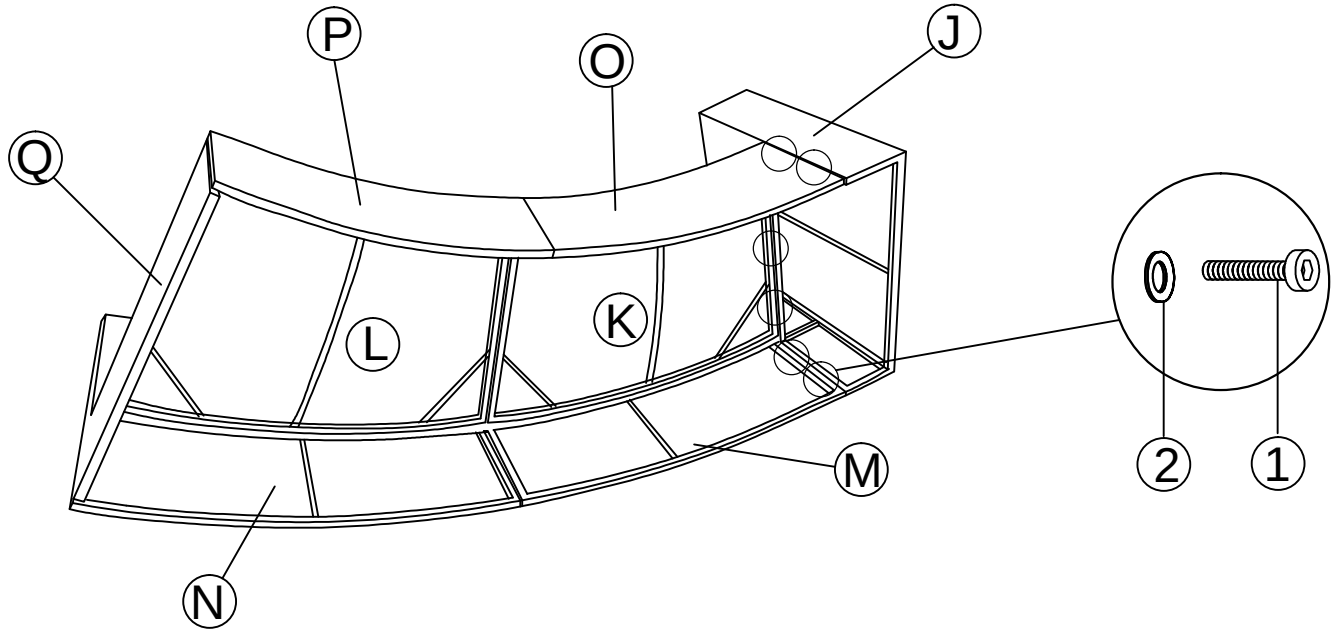

J Left Armrests	① Bolt	② Washer
	 M6x35	
x1	x6	x6

Lock the screws in this step .

Assembly Instruction

STEP6

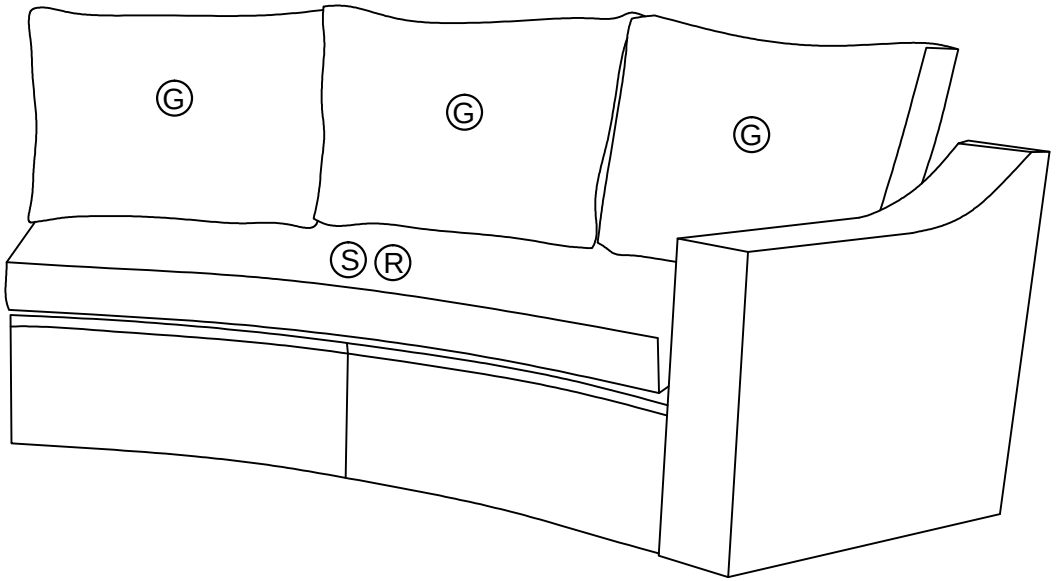

Ⓡ Seat cushion	Ⓢ Seat cushion cover	Ⓖ Back cushion
x1	x1	x3

SOFA

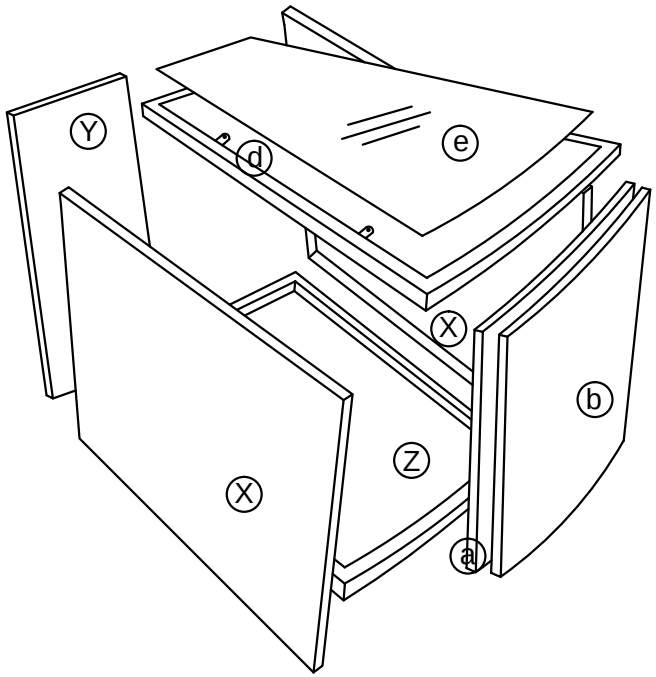

Main structure accessories

X Side panel  x2	Y Front panel  x1	Z Bottom panel  x1	a Door frame  x1	b Door panel 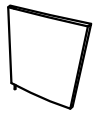 x1
d Top frame  x1	e Glass  x1			

Hardware parts

1 Bolt  M6x35 x17	2 Washer  x17	3 Allen Key  x1		

Assembly Instruction

STEP1

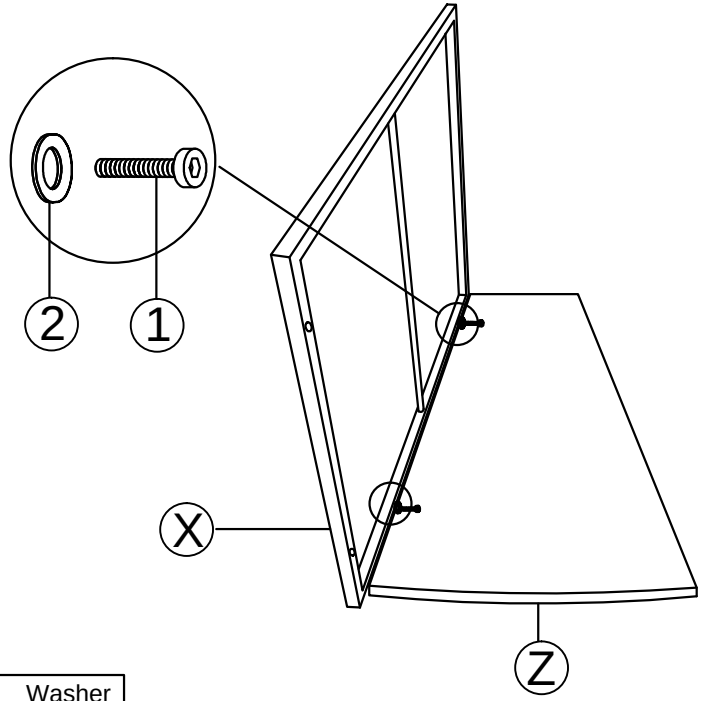

ⓧ Side panel	Ⓩ Bottom panel	① Bolt	② Washer
x1	x1	M6x35 x2	x2

Please DO NOT tighten the screws at this step yet. Wait to tighten all the screws until the product is fully installed.

Assembly Instruction

STEP2

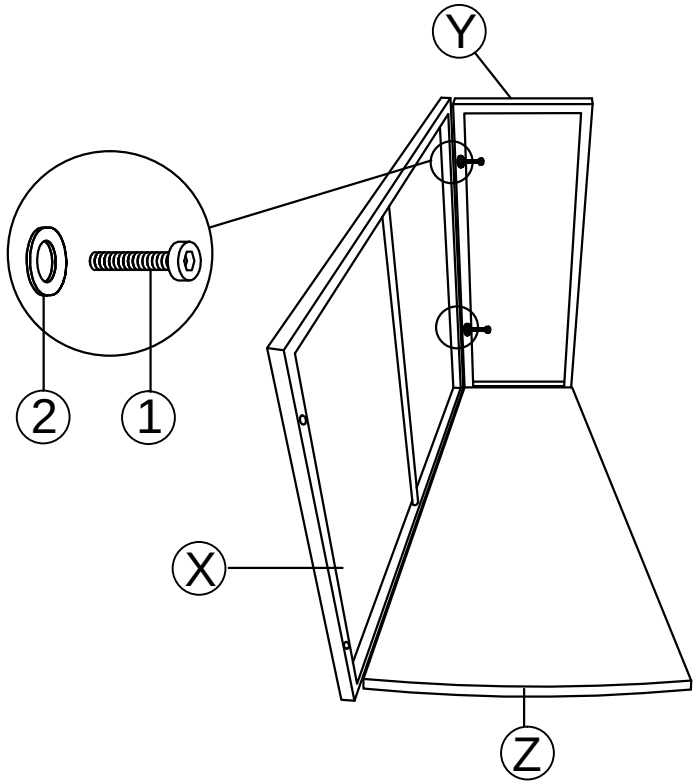

Ⓨ Front panel	① Bolt	② Washer
		
x1	M6x35 x2	x2

Please DO NOT tighten the screws at this step yet. Wait to tighten all the screws until the product is fully installed.

Assembly Instruction

STEP3

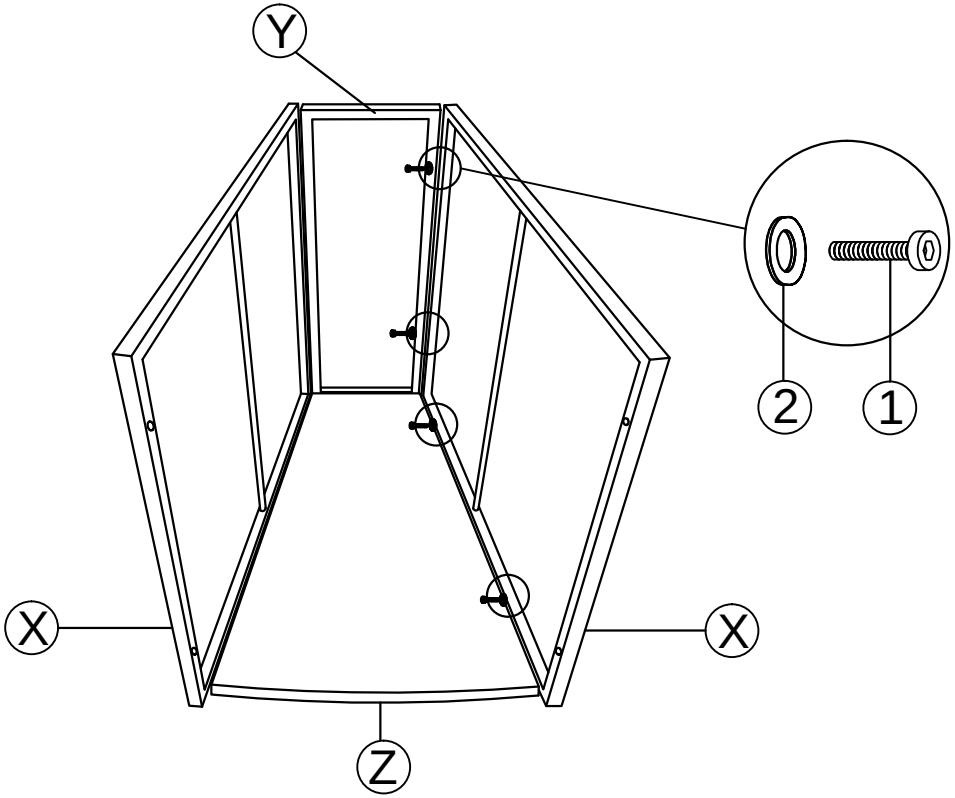

ⓧ Side panel	① Bolt	② Washer
		
x1	M6x35 x4	x4

Please DO NOT tighten the screws at this step yet. Wait to tighten all the screws until the product is fully installed.

Assembly Instruction

STEP4

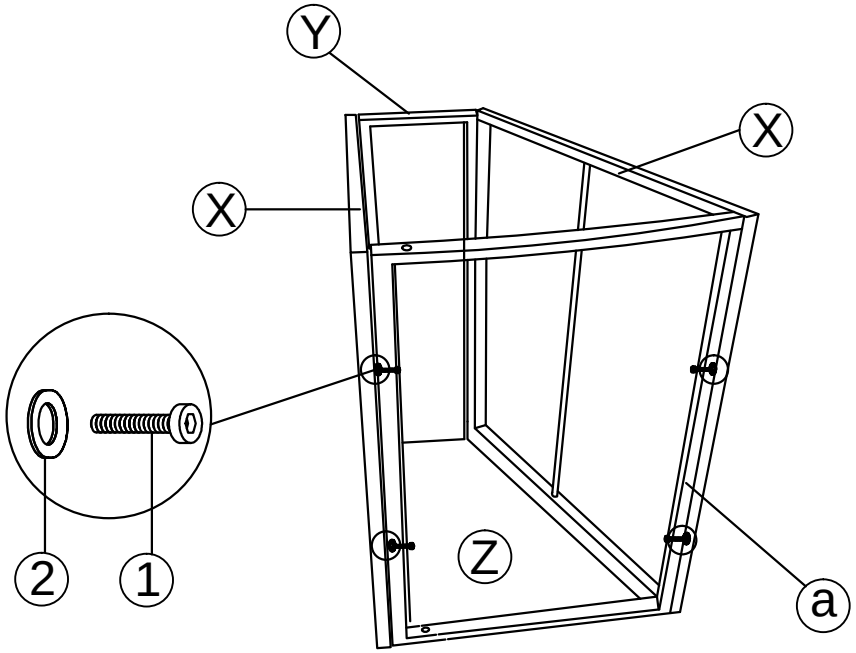

ⓐ Door frame	① Bolt	② Washer
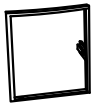	 M6x35	
x1	x4	x4

Please DO NOT tighten the screws at this step yet. Wait to tighten all the screws until the product is fully installed.

Assembly Instruction

STEP5

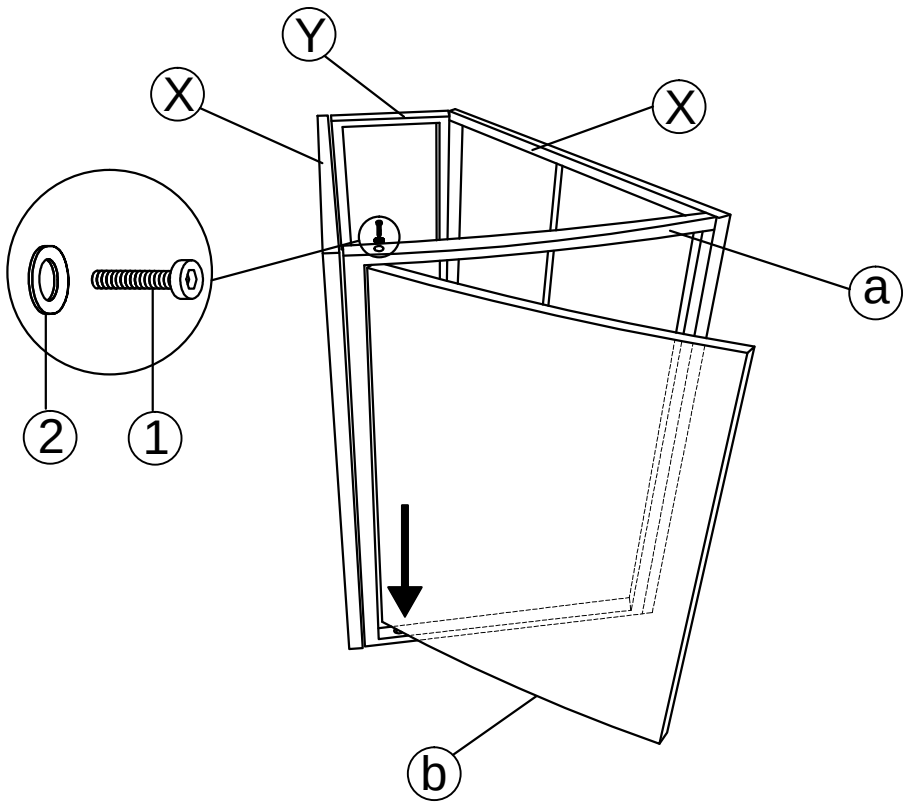

ⓑ Door panel	① Bolt	② Washer
		
x1	M6x35 x1	x1

Please DO NOT tighten the screws at this step yet. Wait to tighten all the screws until the product is fully installed.

Assembly Instruction

STEP6

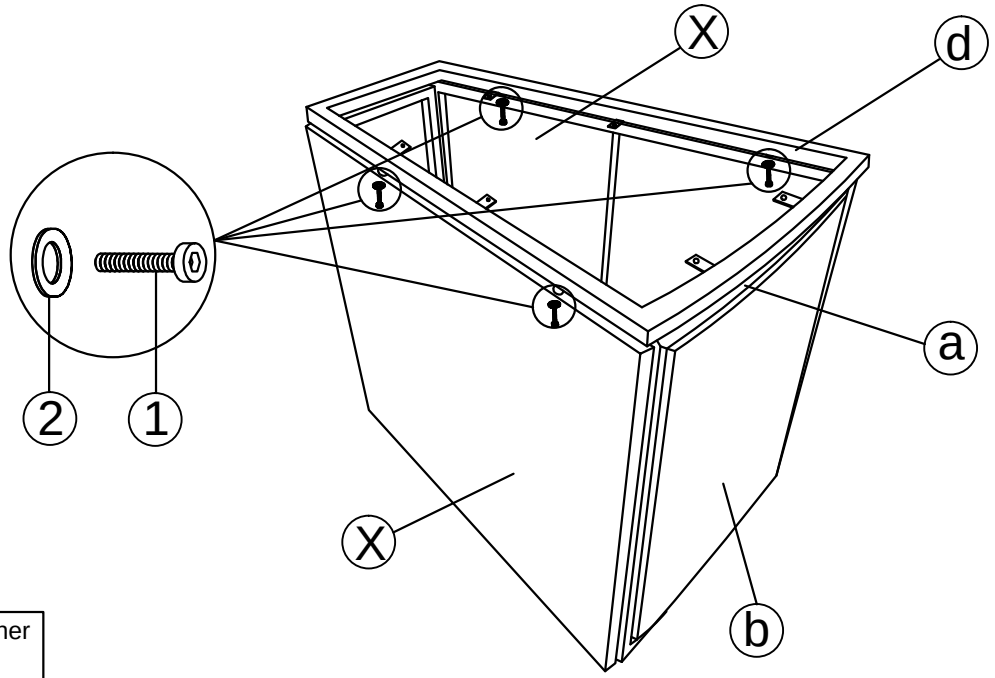

ⓓ Top frame	① Bolt	② Washer
	 M6x35	
x1	x4	x4

Lock the screws in this step .

Assembly Instruction

STEP7

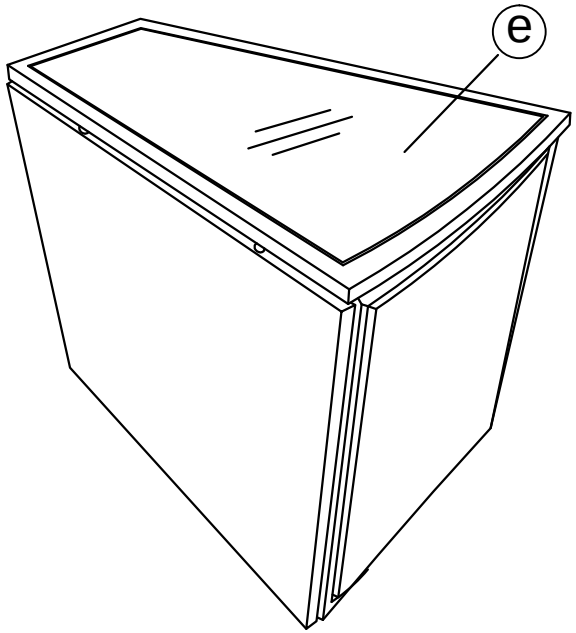

ⓔ Glass



x1