# ASSEMBLY INSTRUCTIONS

## CHAIR

⚠ **Sets often ship in multiple boxes and delivery date may vary.**

Please read over the instructions, it will be a time-saver in the long run.
Note: Before assembly, please be sure to work on a soft flat surface to avoid any damage to the finish.
Please leave bolts loosened until all bolts are placed before tightening completely.

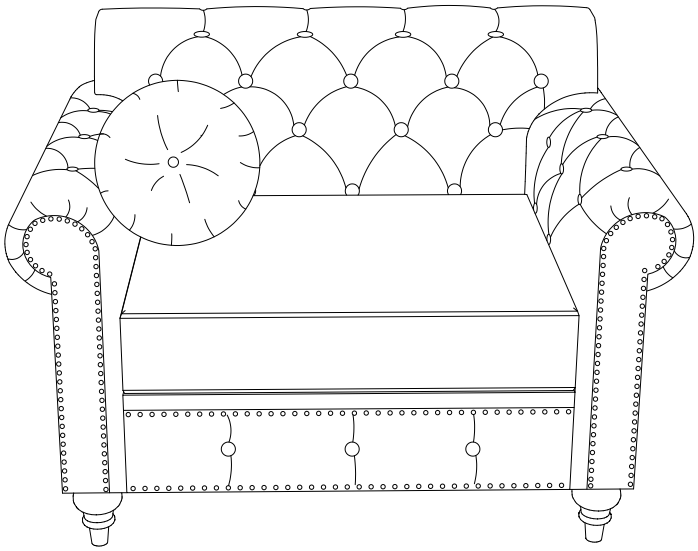

# Explosion Diagram

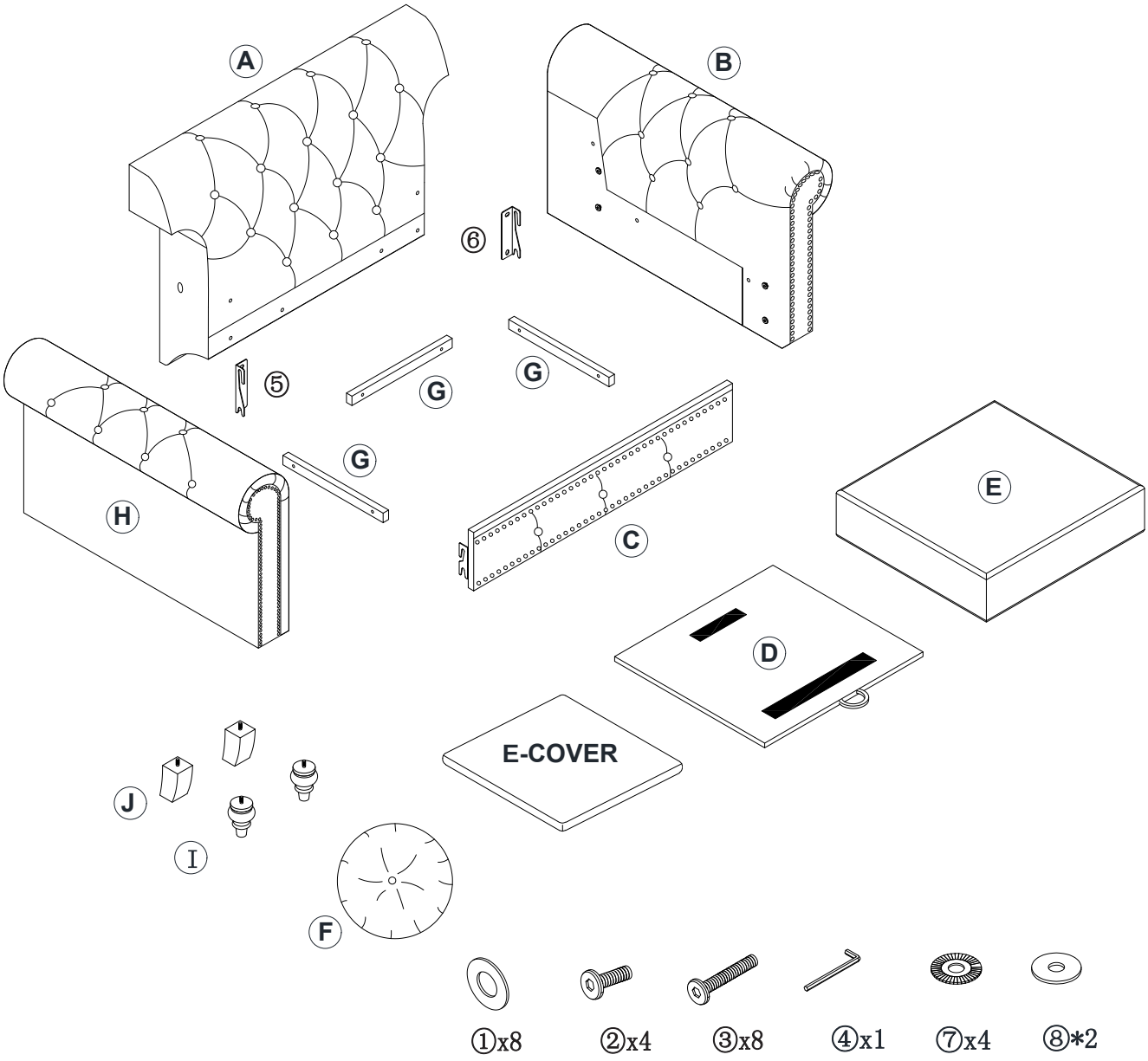

# PARTS LIST

## PART LIST CARTON 1 :

| Part# | Picture | Description | QTY | Part# | Picture | Description | QTY |
|---|---|---|---|---|---|---|---|
| A | | Backrest | 1 | ① | | Flat Washer | 8 |
| C | | Front Plate | 1 | ② | | Bolt M8*20 | 4 |
| D | | Seat Plate | 1 | ③ | | Bolt M8*45 | 8 |
| E | | Inner Seat Cushion | 1 | ④ | | Allen Wrench S5 | 1 |
| E-COVER | | Pu Fabric Cover | 1 | ⑤ | | Left Metal Hanger | 1 |
| F | | Pillow | 1 | ⑥ | | Right Metal Hanger | 1 |
| G | | Support | 3 | ⑦ | | Plastic Washer | 4 |
| I | | Front Leg | 2 | ⑧ | | Rubber Washer | 2 |
| J | | Back Leg | 2 | | | | |

## PART LIST CARTON 2 :

| Part# | Picture | Description | QTY | Part# | Picture | Description | QTY |
|---|---|---|---|---|---|---|---|
| B | | Right Armrest | 1 | H | | Left Armrest | 1 |

# ASSEMBLY STEPS

## Step 1

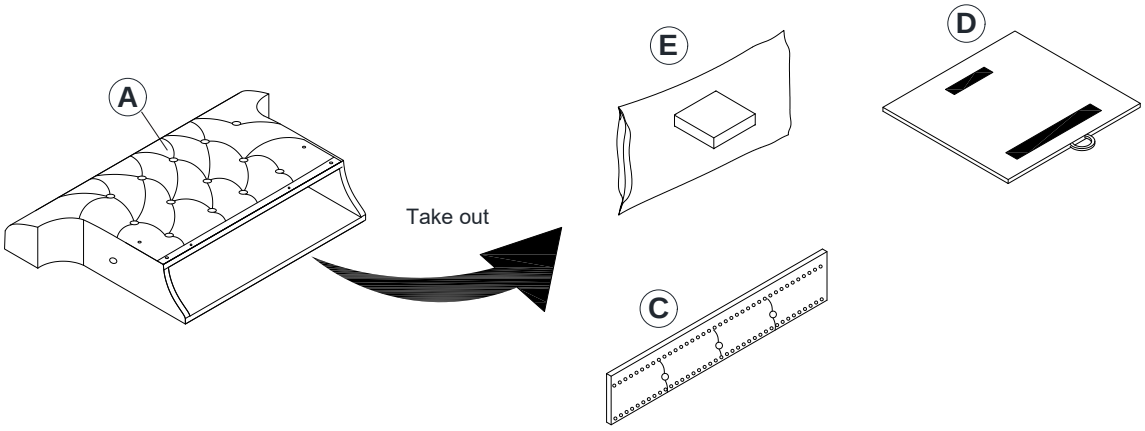


## Step 2

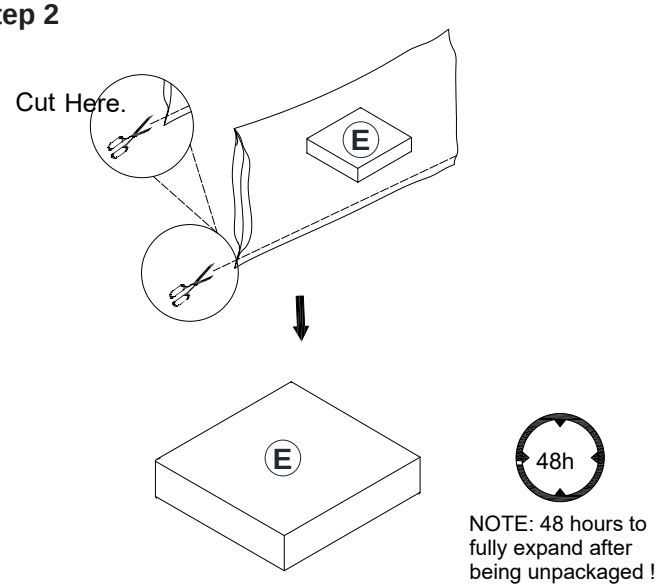


NOTE: 48 hours to fully expand after being unpackaged !

## Step 3

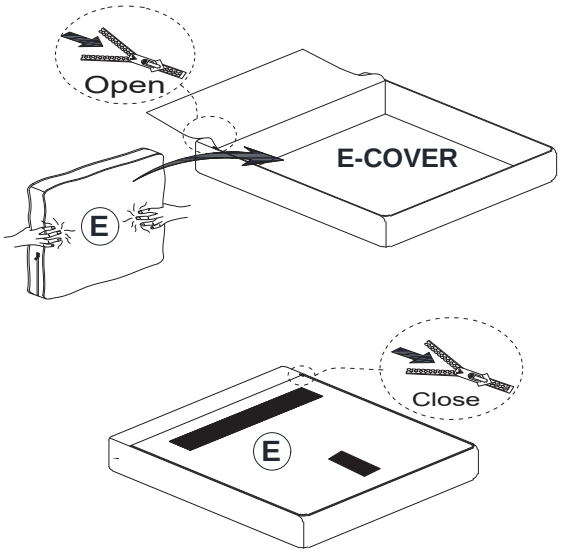


## Step 4

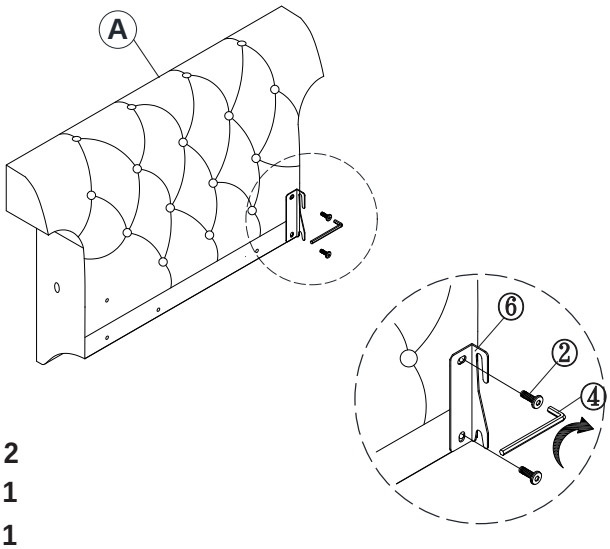


②x 2
④x 1
⑥x 1

## Step 5

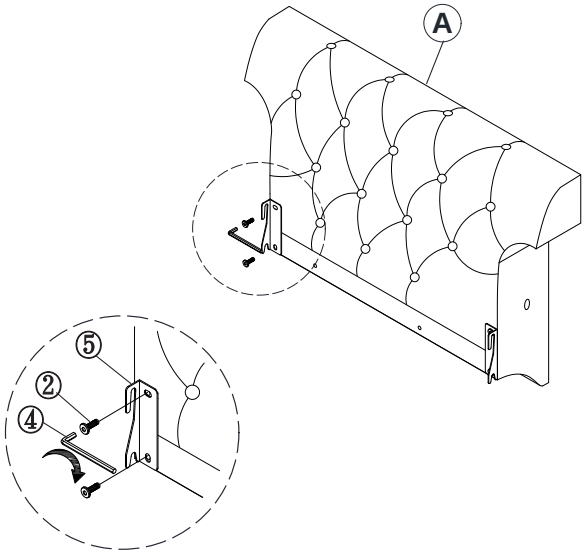


②x 2
④x 1
⑤x 1

## Step 6

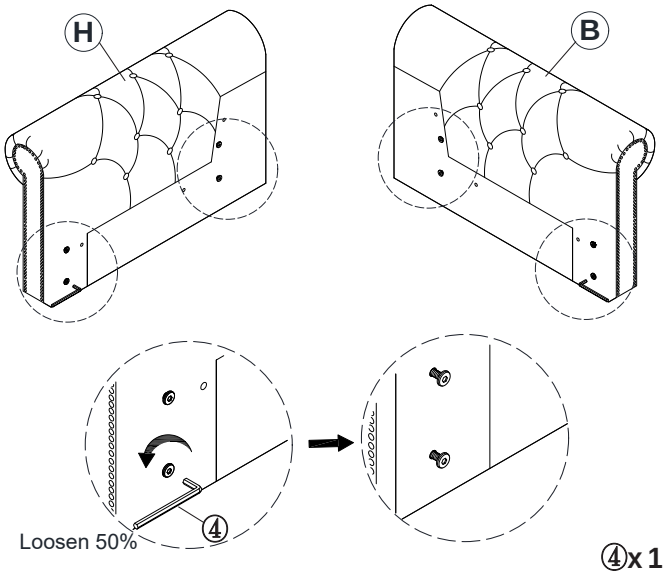


④x 1

## Step 7

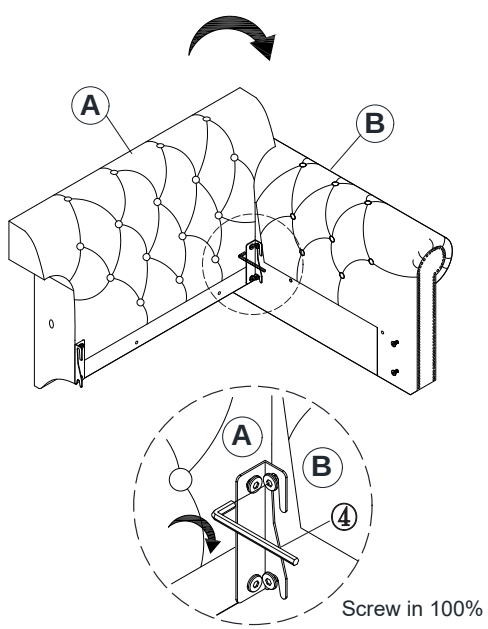


④x 1

## Step 8

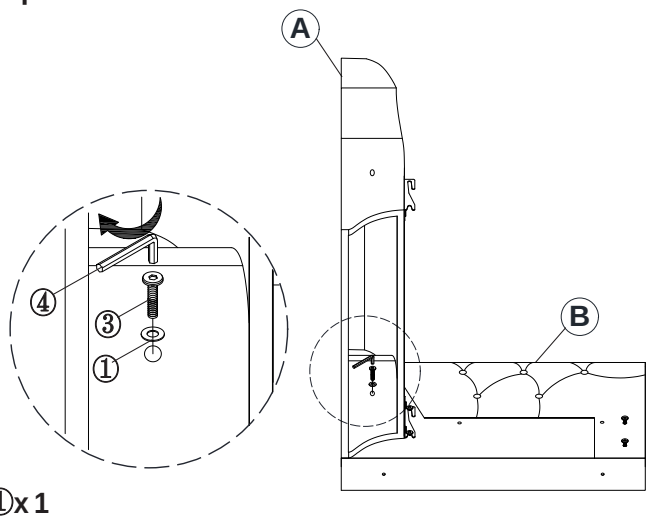


①x 1
③x1
④x1

## Step 9

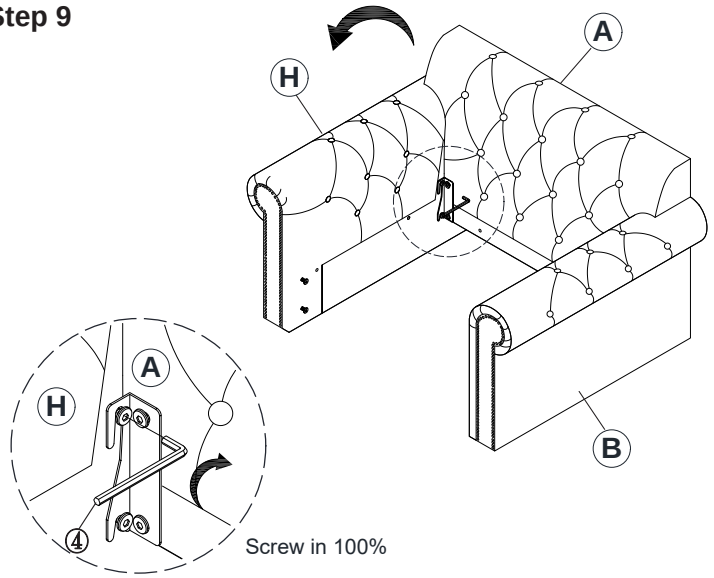


④x 1

## Step 10

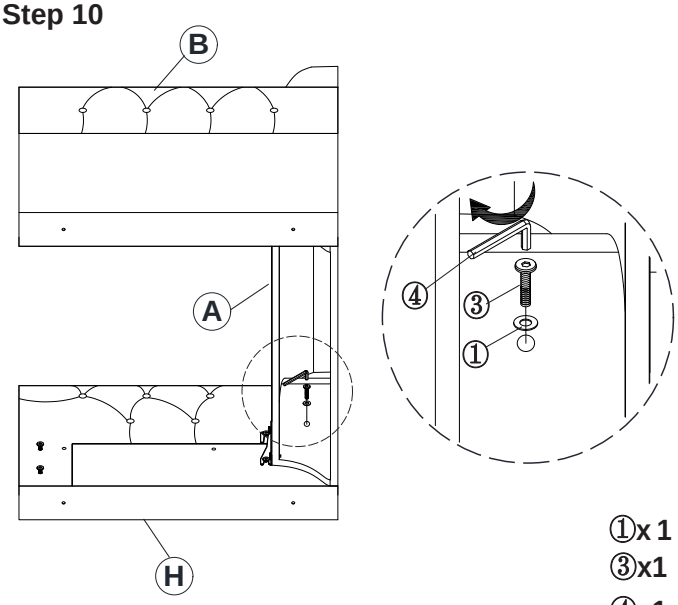


①x 1
③x1
④x1

## Step 11

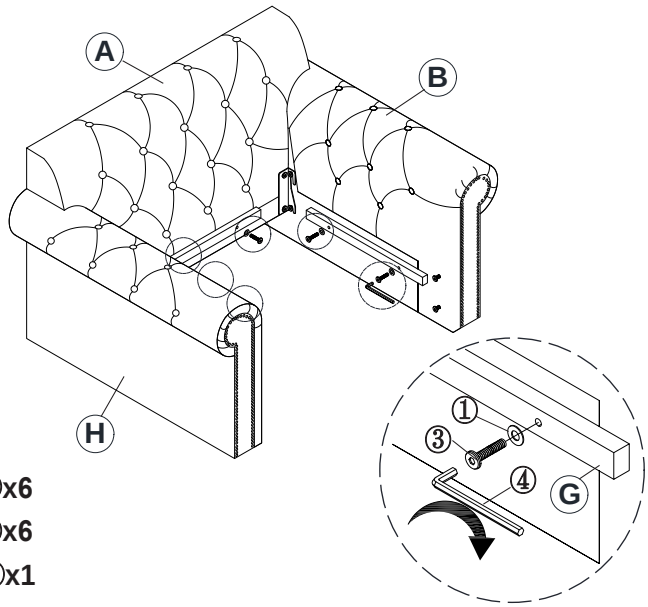


①x6
③x6
④x1

**Step 12**

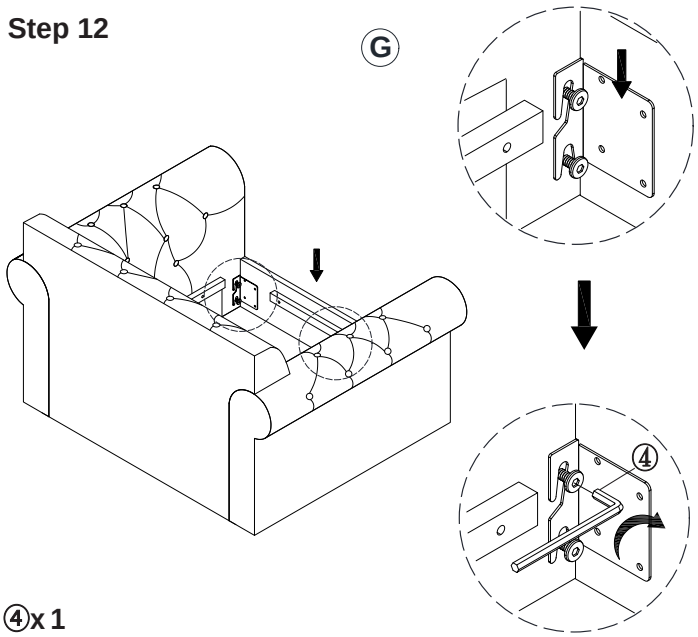


④x 1

**Step 13**

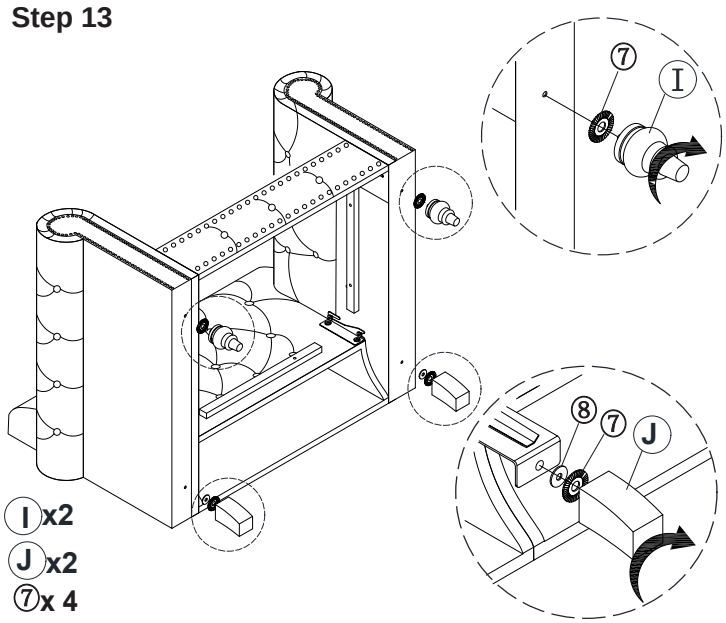


Ⓘx2
Ⓙx2
⑦x 4
⑧x 2

**Step 14**

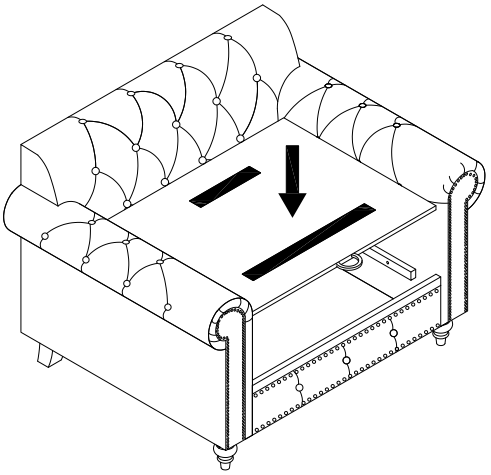

**Step 15**

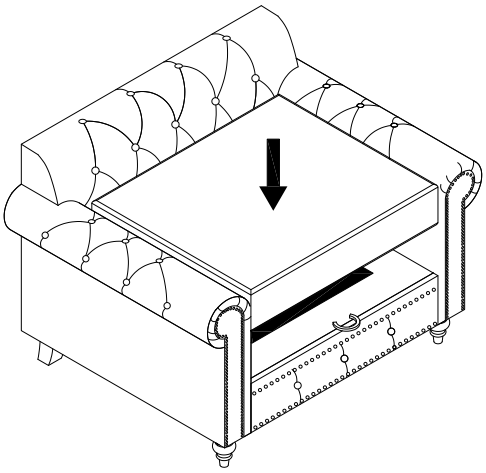
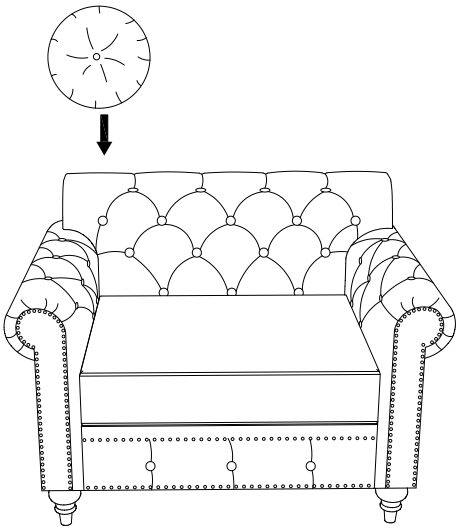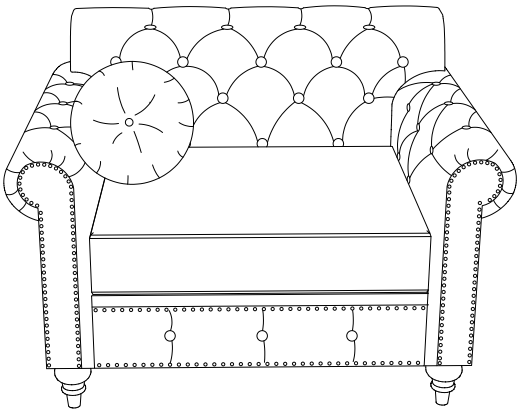
**Step 13**