Installation Instruction

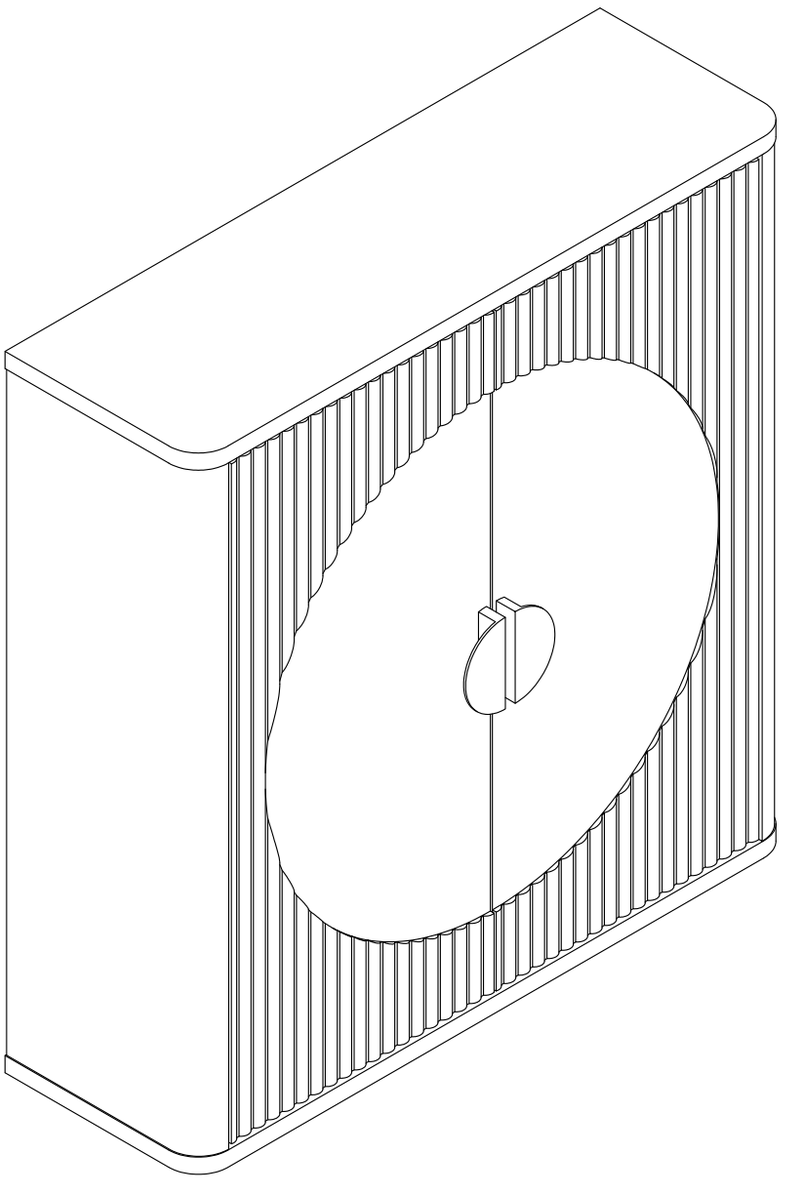

If you have any questons, please contact us
We will help you with in 24 hours

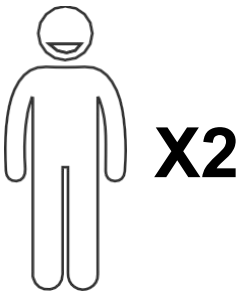

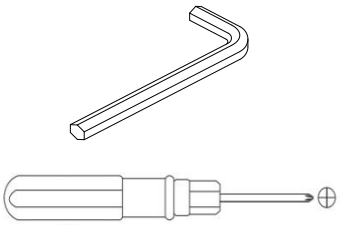

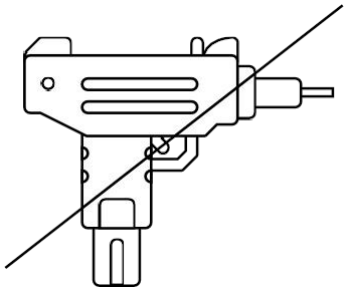

We recommend using hand tools for assembly.

If an electric screwdriver is used, reduce power and torque to avoid damage to the product.

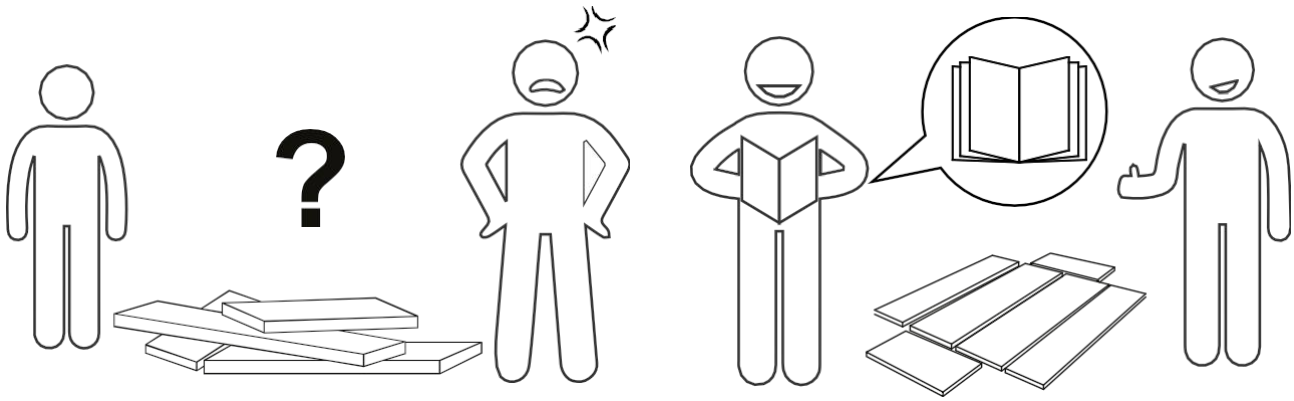

Instructions For Fastening
CAM-BOLT and CAM-LOCK

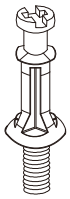

CAM-BOLT

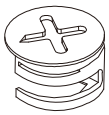

CAM-LOCK

Tools Required

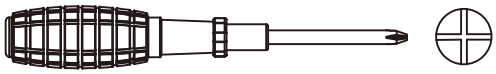

INSERTING AND TIGHTENING CAM-BOLT

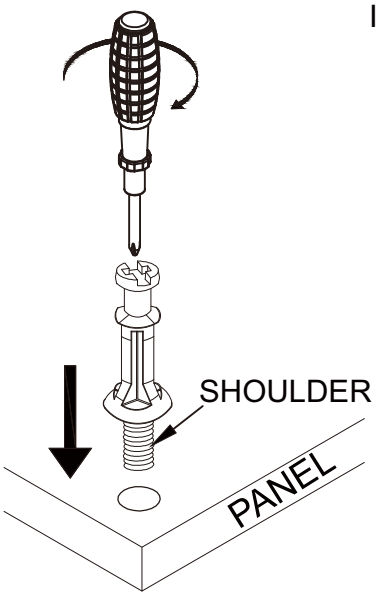

Place Cam-bolt on pre-drilled hole and screw in vertically

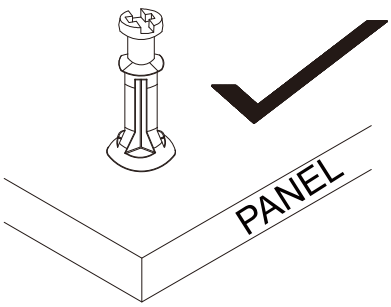

Shoulder is flushed (on the same level) with the panel.

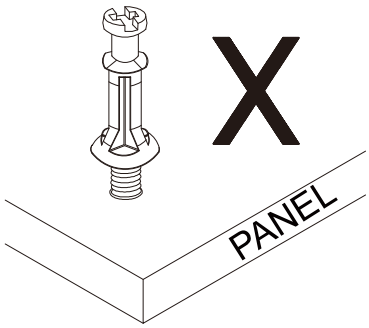

Shoulder is above the panel.

Place Cam-bolt on the designated pre-drilled holes on the panel. Use a Phillips Screwdriver to screw-in Cam-bolt vertically until shoulder is flushed (on the same level) with panel.

INSERTING CAM-LOCK

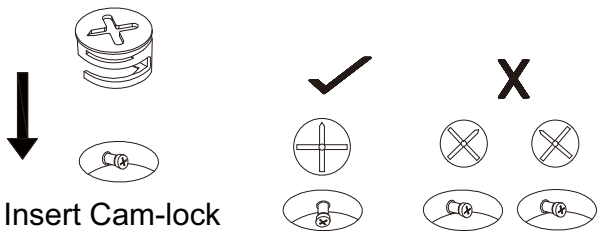

Insert Cam-lock with arrow align to Cam-bolt head

CORRECT

WRONG

Align the arrow on the Cam-lock to the Cam-bolt head and insert the Cam-lock. Ensure Cam-lock is fully inserted.

TIGHTENING CAM-LOCK

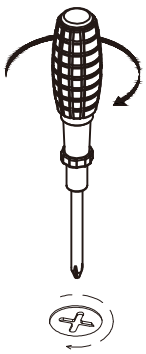

Use a Flat-head Screwdriver to turn Camlock clockwise so it locks onto the head of the Cam-bolt. Turn until it is snug (about 3/4ths of a turn) -- over-tightening could damage Cam-lock or/and Cam-bolt.

The Hardwares

A	X12
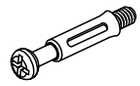	
M6x35mm	

B	X12
	

C	X24
	
M3.5x14mm	

D	X5
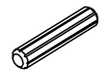	

E	X3
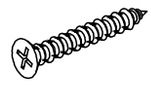	
M4x35mm	

F	X8
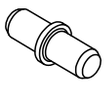	

G	X1
	
4mm	

H	X4
	
M4x16mm	

I	X2
	

J	X3
	

K	X4
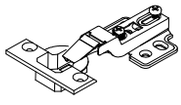	

M	X1
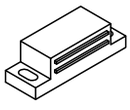	

N	X4
	
M5x40mm	

O	X2
	
M3x16mm	

Notice:

1. Follow the installation instructions. Please confirm all accessories are preset before installation.
2. Do not fully tighten the screws during initial assembly.Fully tighten screws only once all pieces which are correctly assembled.
3. If you encounter any problems during installation, please contact our customer service.
4. Please unbox the item from the side with an open-label and put a carpet on the floor to avoid scratching it.

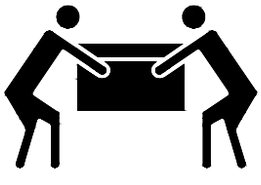

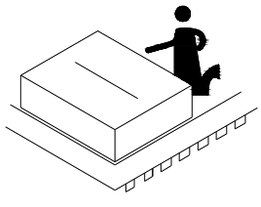

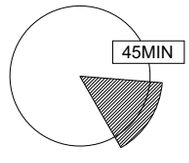

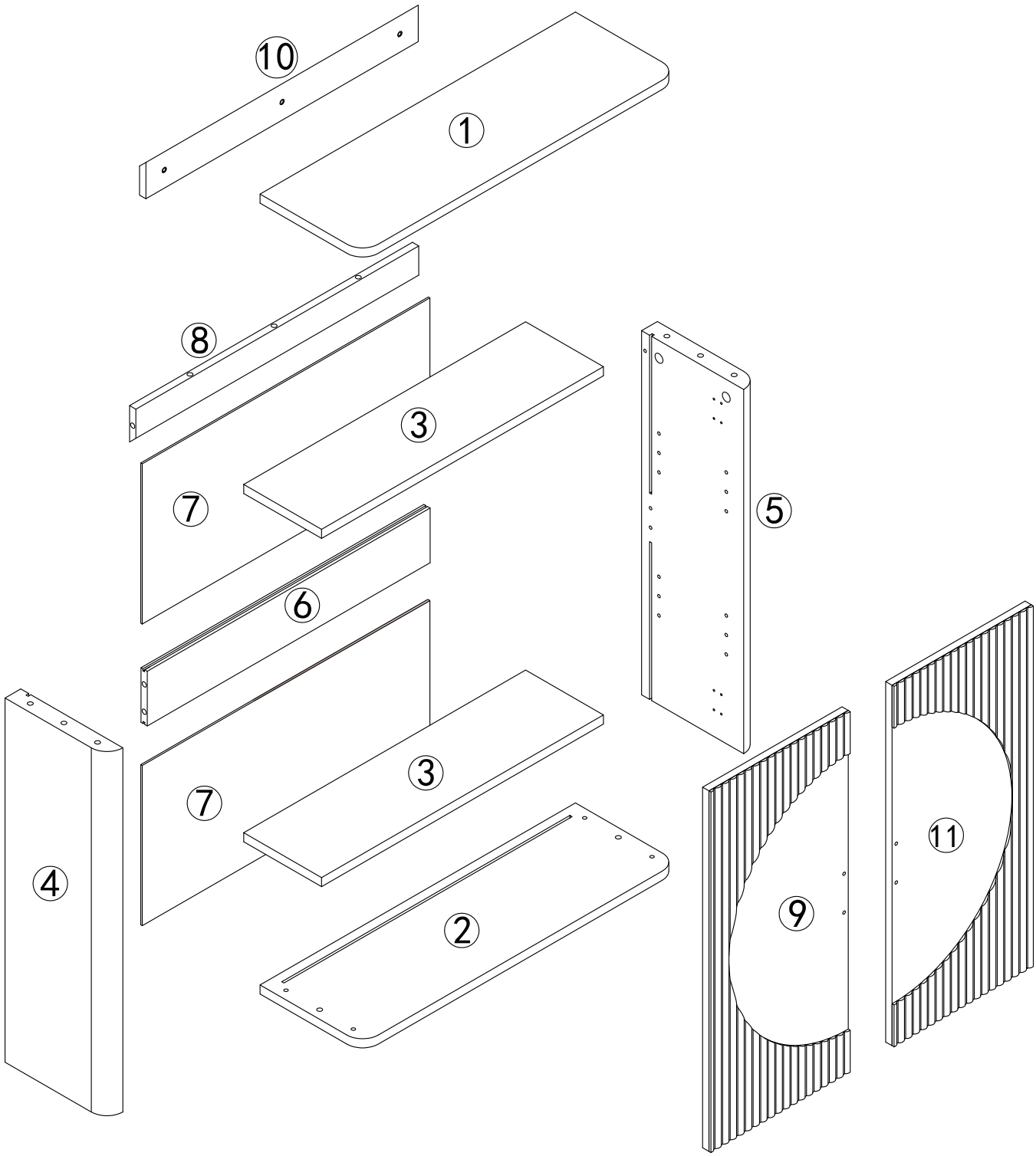

⚠ Caution

Make sure all parts are included. Most board parts are labeled or stamped on the raw edge. Contact us for free replacement if having damaged or missing parts.

① 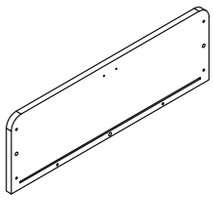	② 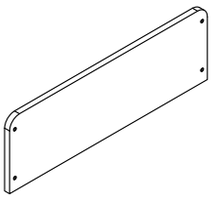	③ 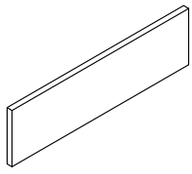	④ 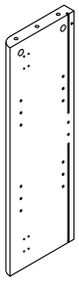
1PC	1PC	2PCS	1PC
⑤ 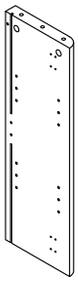	⑥ 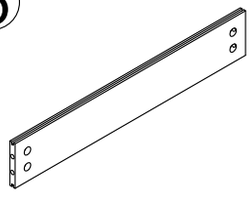	⑦ 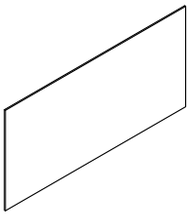	⑧ 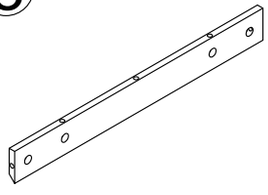
1PC	1PC	2PCS	1PC
⑨ 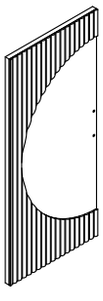	⑩ 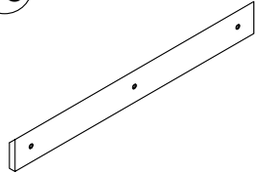	⑪ 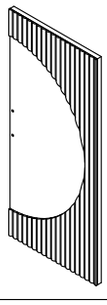	
1PC	1PC	1PC	

Step 1

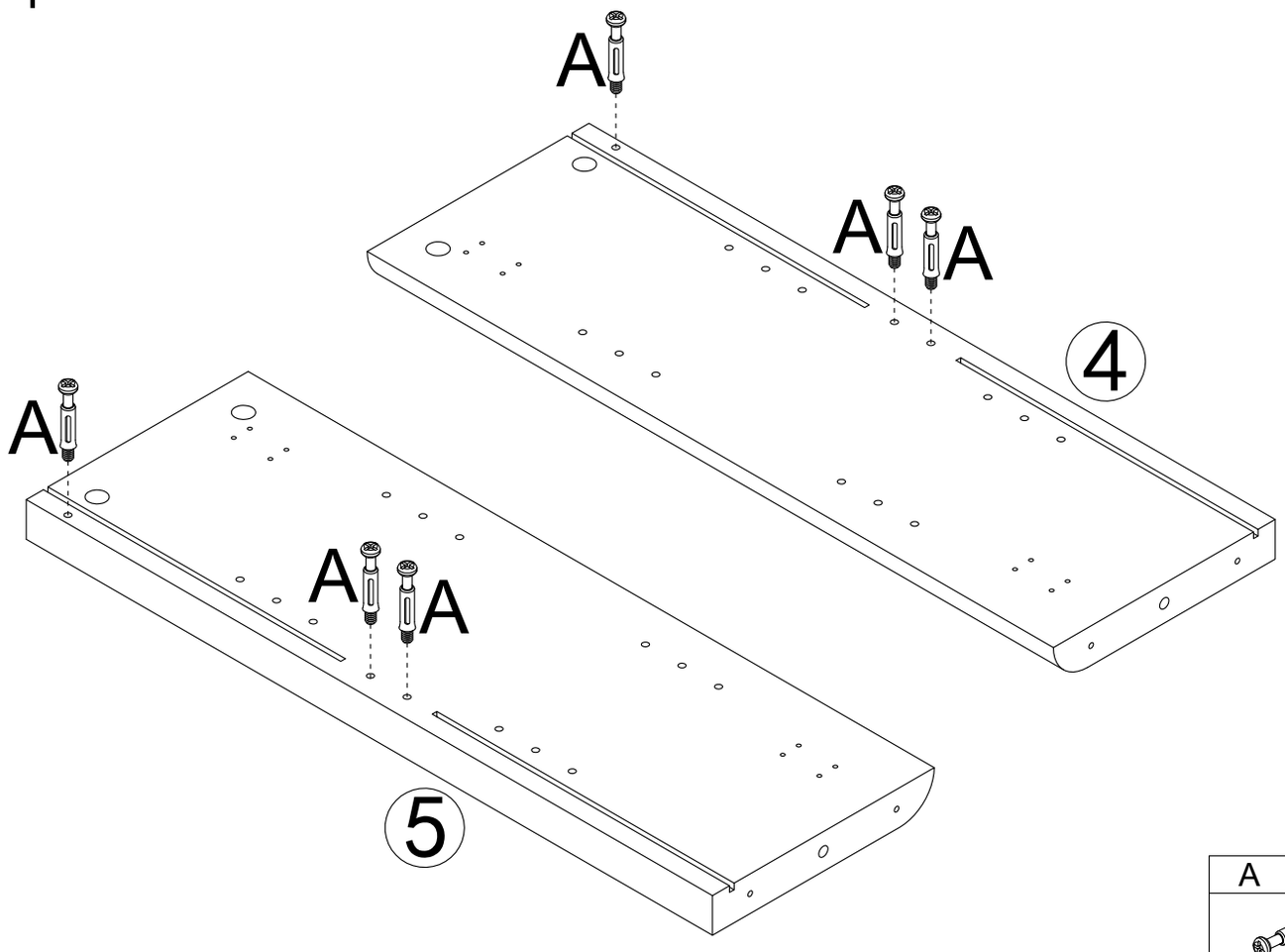

A	X6
	
M6x35mm	

Step 2

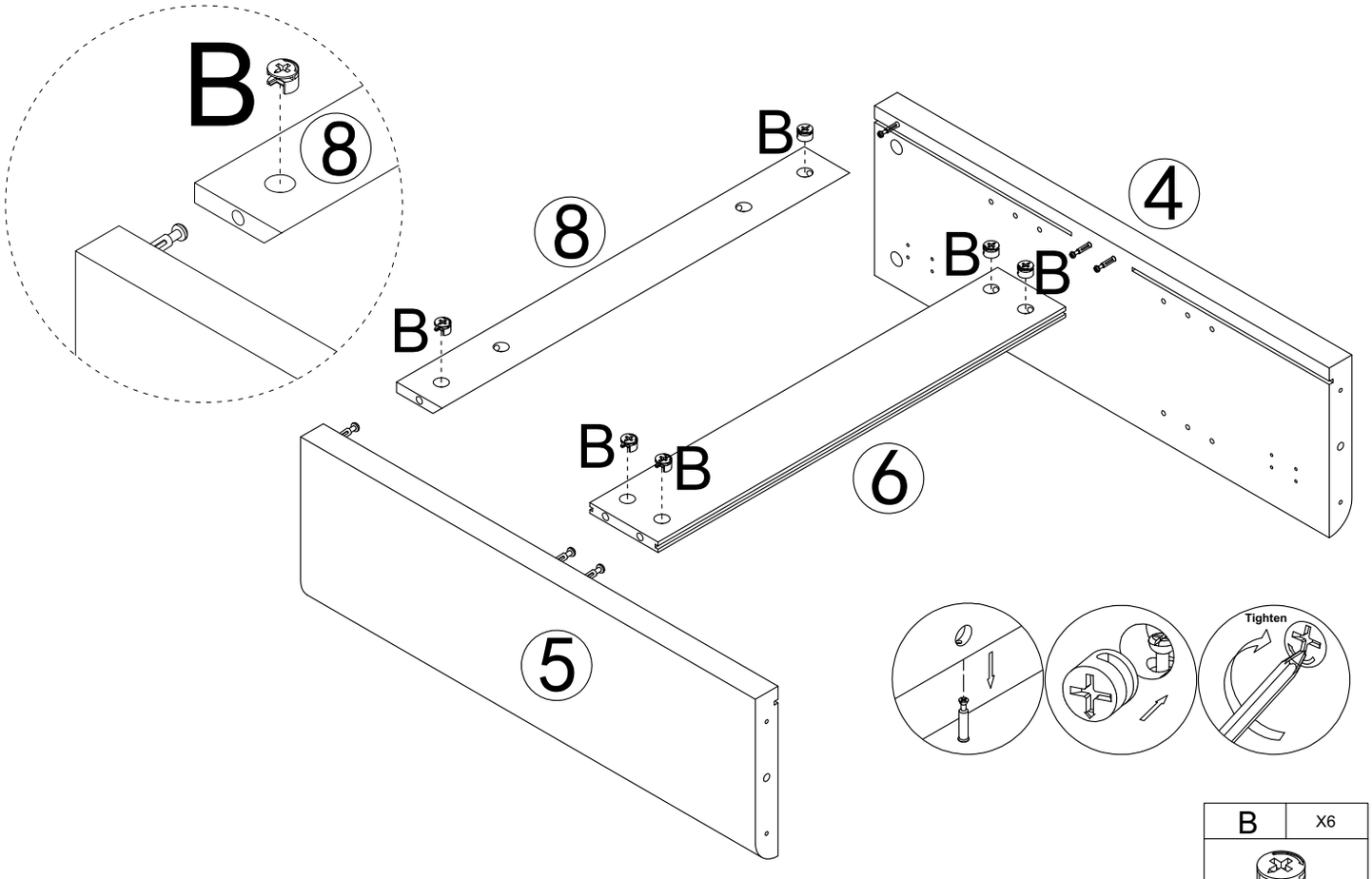

B	X6

Step 3

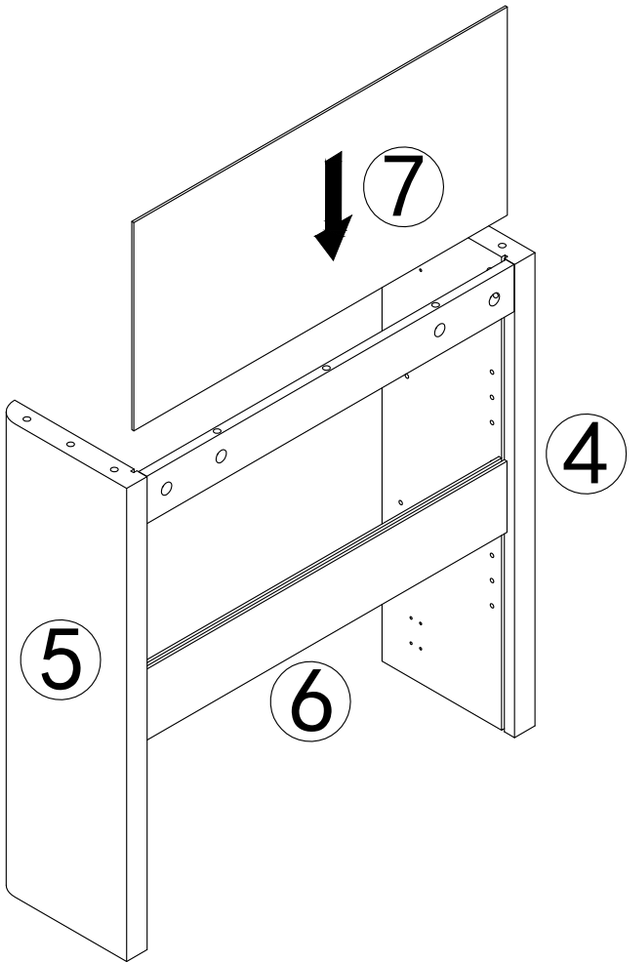

Step 4

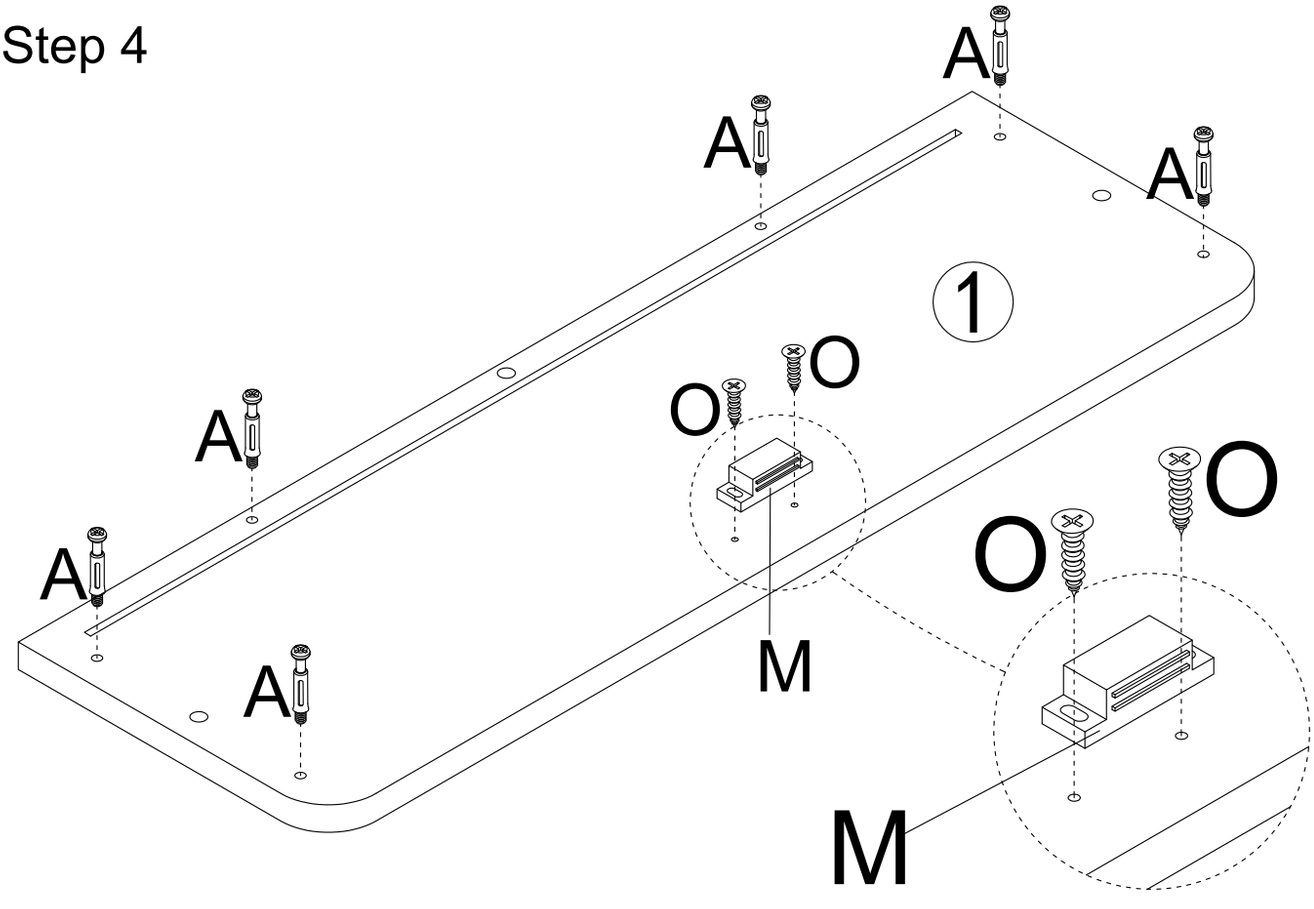

O	X2
M3x16mm	

M	X1

A	X6
M6x35mm	

Step 5

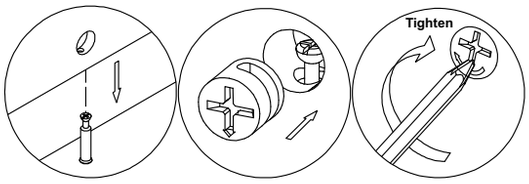

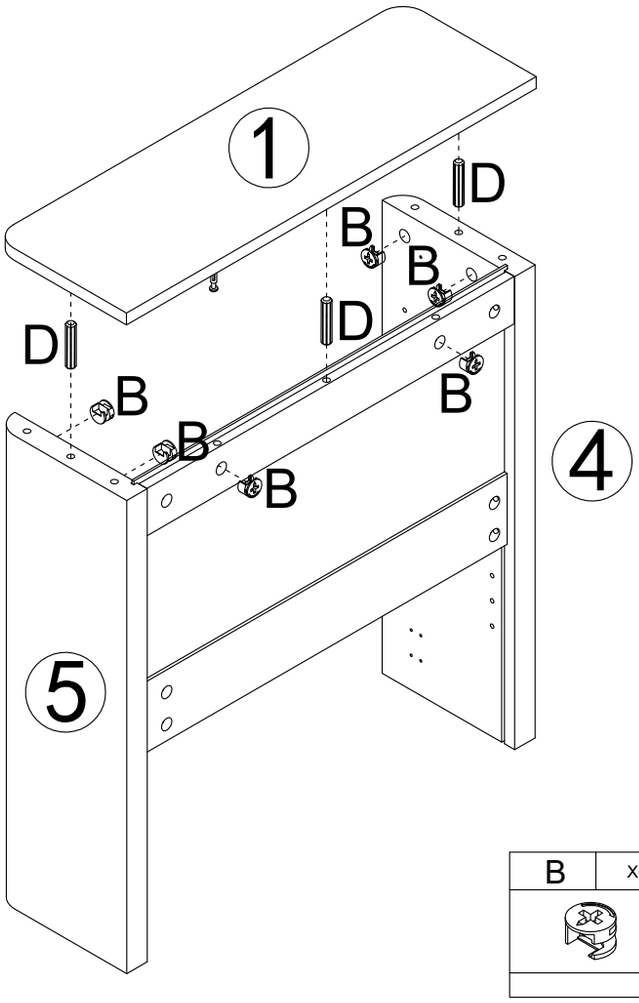

B	X6

D	X3

Step 6

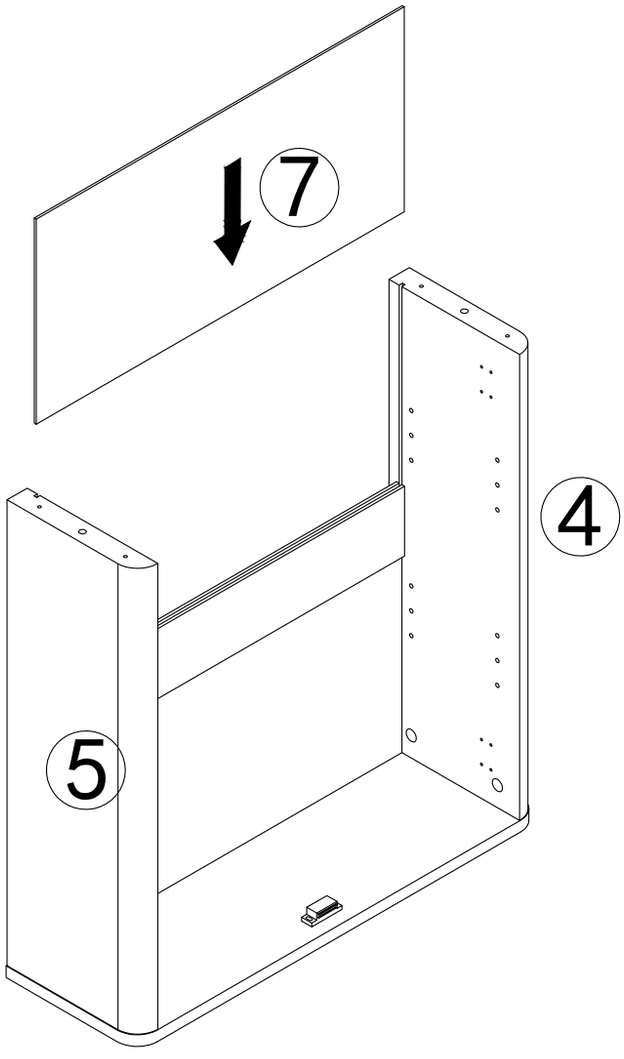

Step 7

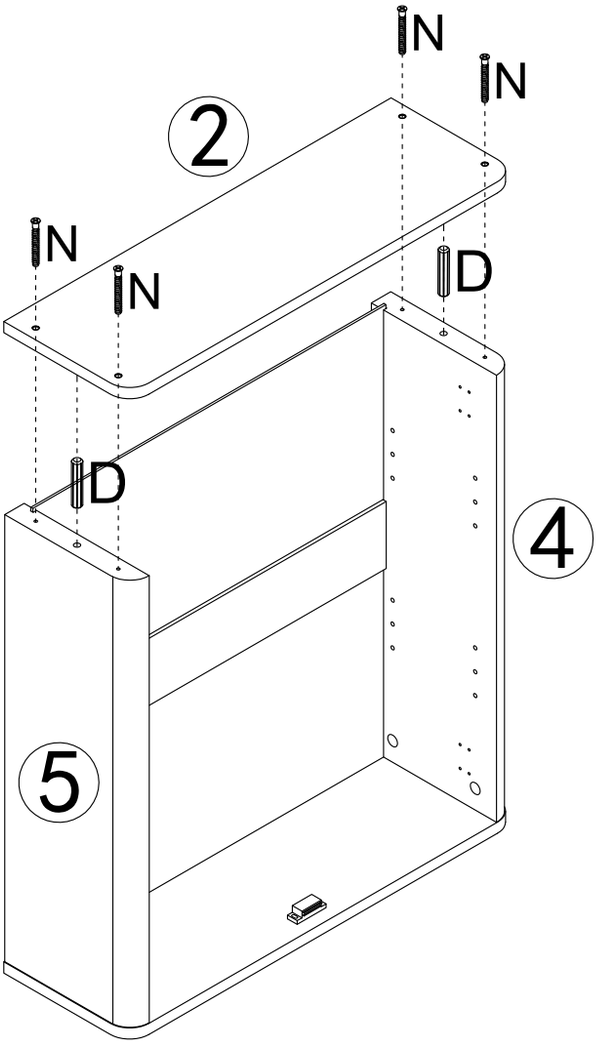

D	X2
	

N	X4
	
M5x40mm	

Step 8

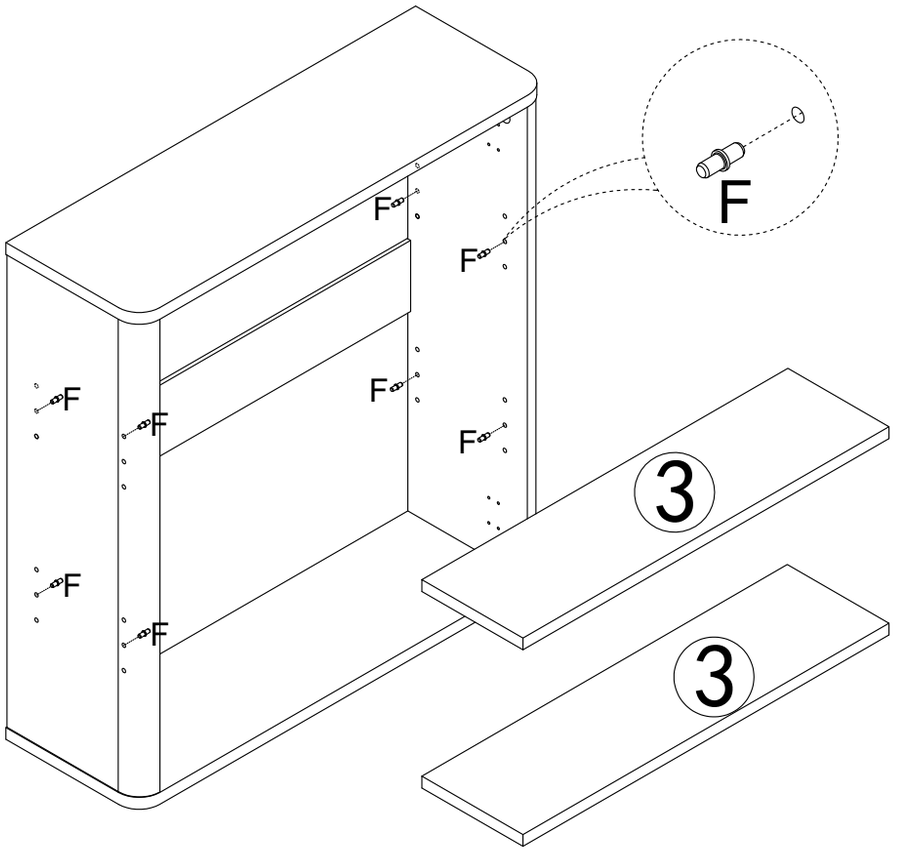

F	X8
	

Step 9

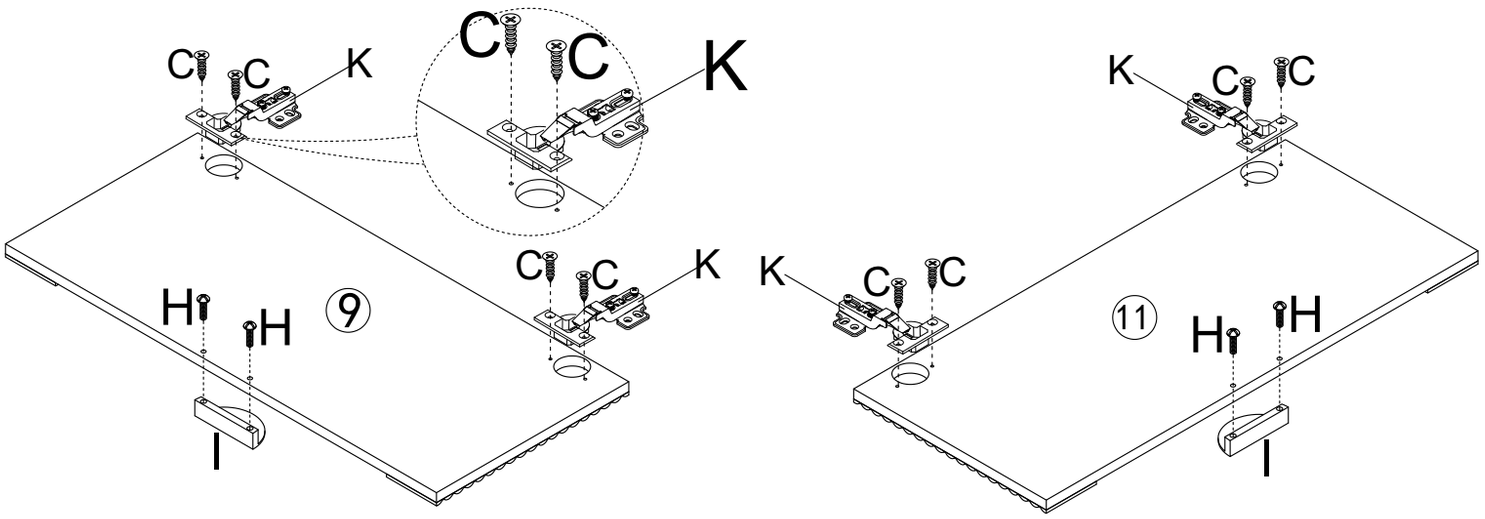

C	X8
M3.5x14mm	

K	X4

I	X2

H	X4
M4x16mm	

Step 10

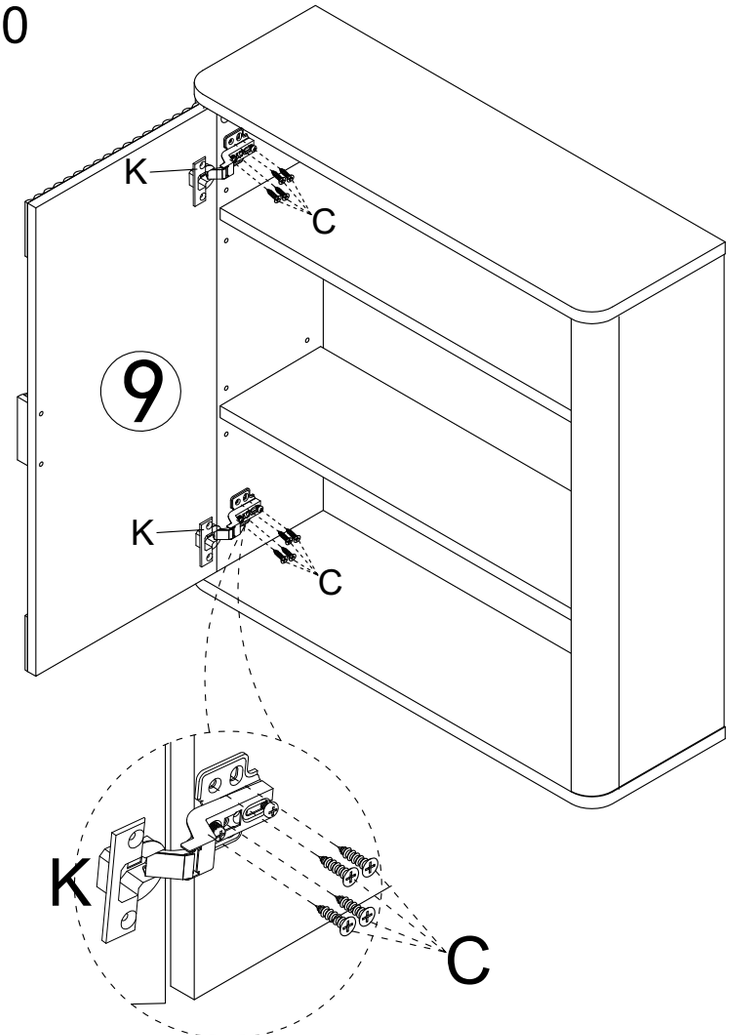

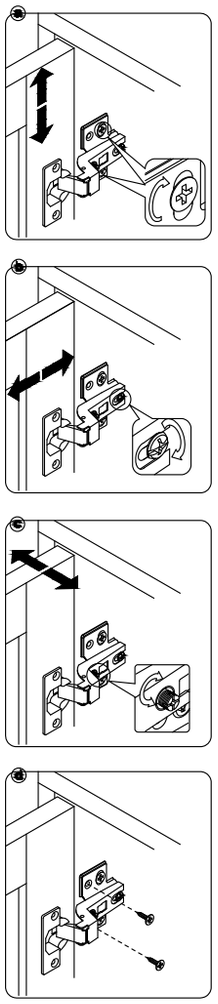

C	X8
M3.5x14mm	

Step 11

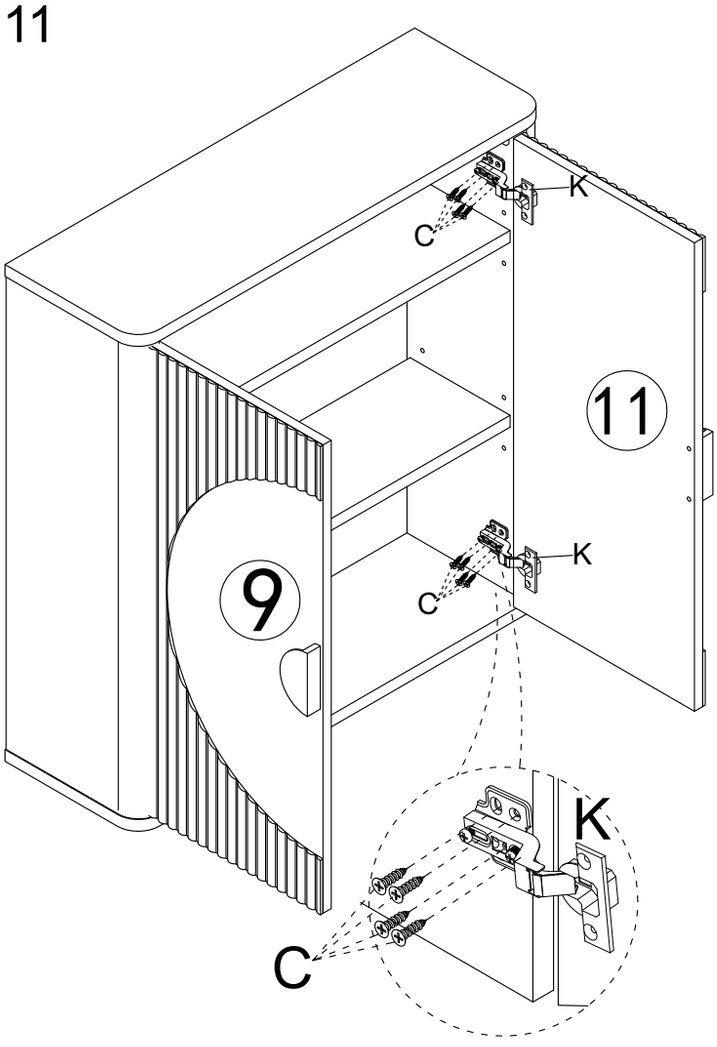

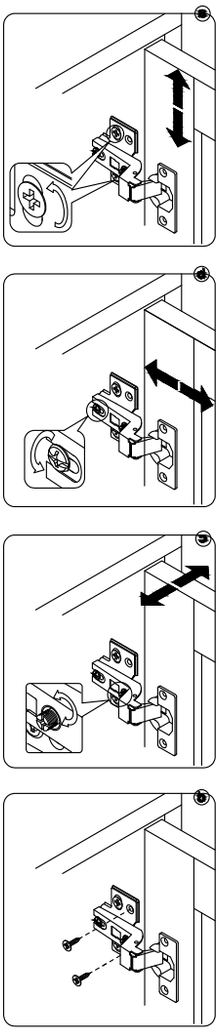

C	X8
M3.5x14mm	

Step 12

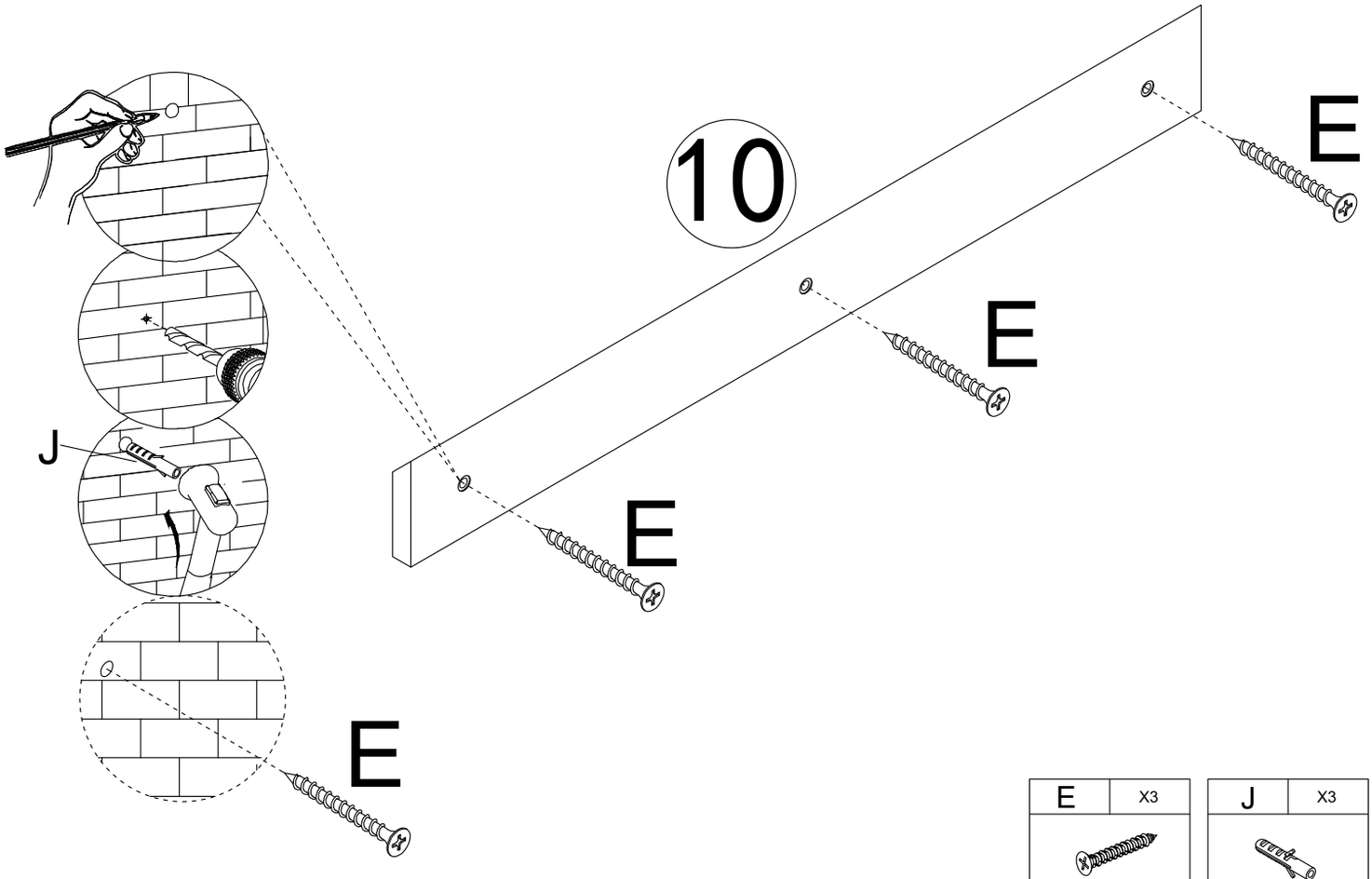

E	X3
M4x35mm	

J	X3

Step 13

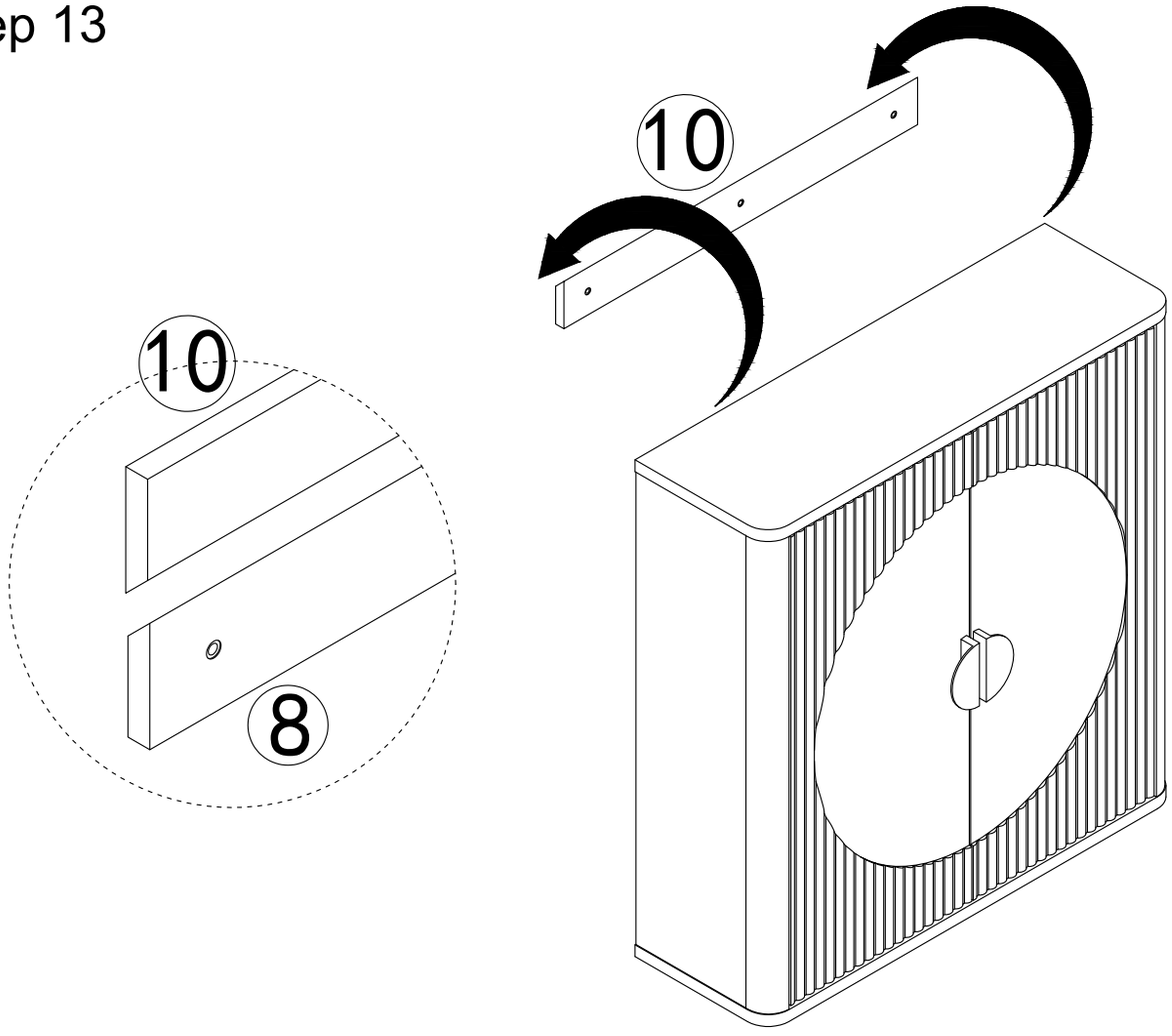

Step 14

