Installation & Assembly

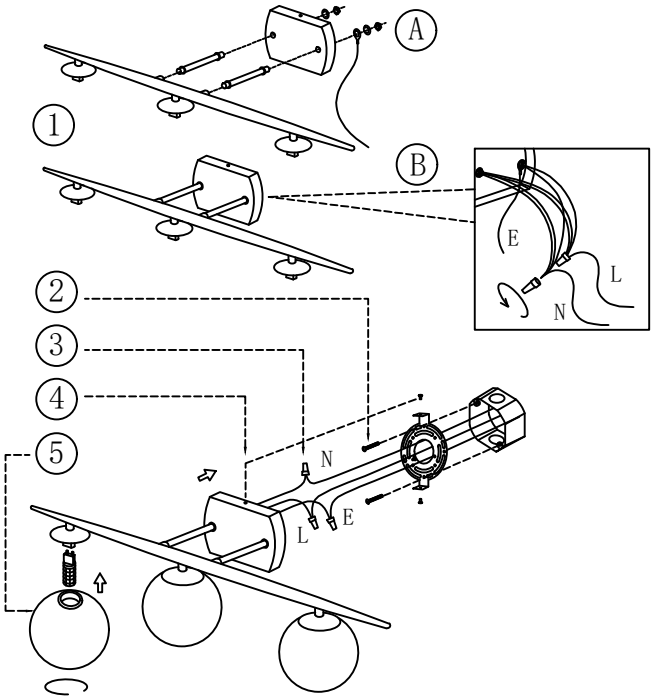

1. Install the main body of the lamp (3/4-light vanity light need to be installed; 2-light vanity light do not need to be installed):
   A. Pass the lamp wires through the metal tube, and use nuts and washers to lock the metal tube and ground wire on the light canopy.
   B. Connect one end of the main wire (the black and white wires provided in the tool kit) to the wires on the lamp (black wire to black wire, white wire to white wire).
2. Turn off the power and install the mounting bracket on the junction box with screws.
3. The other end of the main wire connects the live wire (L), neutral wire (N), and ground wire (E) in the junction box.
4. Fix the main body on the mounting bracket with screws.
5. Install the light source (G9) and glass lampshade.

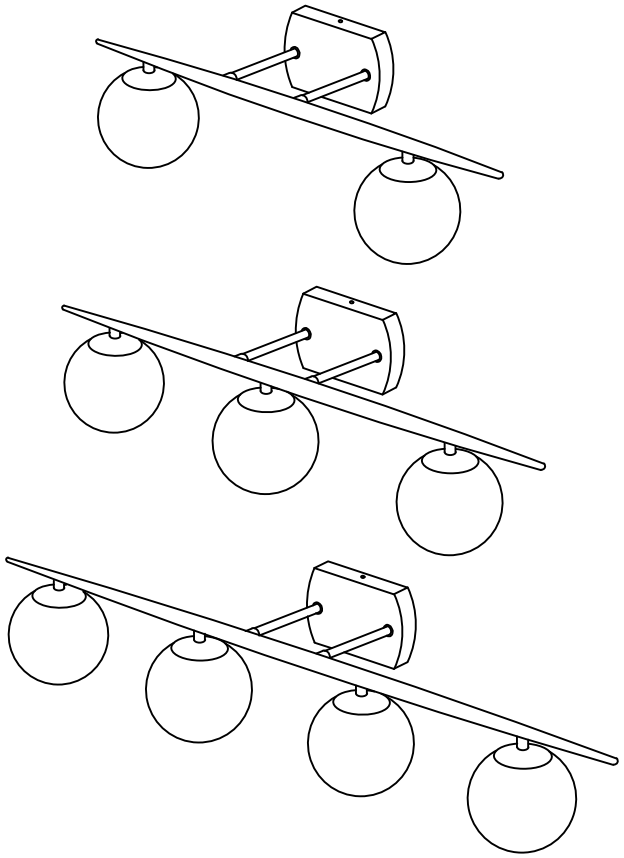

WARNING
(To reduce the risk of fire,electrie shock,or injuiy to persons):

1.We suggest installation by a licensed electrician.
2.Please read the instruction carefully and save it as you may need it at later time.
3.Before you start,NEVER attempt any work without shutting off the electricity until the work is doneA).
Go to the main fuse,or circuit breaker,box in your home.Place the main power switch in the "OFF"position.B)
Place the wall switch in the "OFF"position.
4.Mounting surface should be clean,diy,flat,strong enough and 1 / 4 "larger than the canopy on all side.
Any gaps between the mounting surface and canopy exceeding 3 /16 "should be corrected as required.

S.Make sure that the ceiling or wall can bear the weight of the lamp before fixture.

6. Make sure the voltage you are using is 120V.The maximum wattage is 60W per bulb.
7. Keep the lamp away from acidic objects in case of damaging the surface of the lamp.
8. When replacing bulb,you should tum off or unplug the lamp and you must wait until it is cool as bulbs get hot quickly.
9. The safety instructions appearing in this manual are not meant to cover all possible conditions that may occur.
It must be understood that common sense,caution and care must be used with any electrical products.
10. Do not touch the bulb or lamp shade during the lighting fixture working.
Image for finished product: