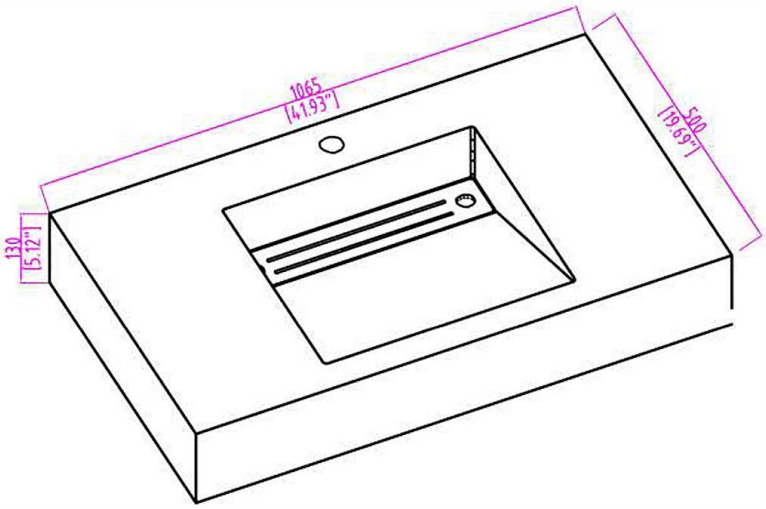
1065
[41.93"]
500
[19.69"]
130
[5.12"]

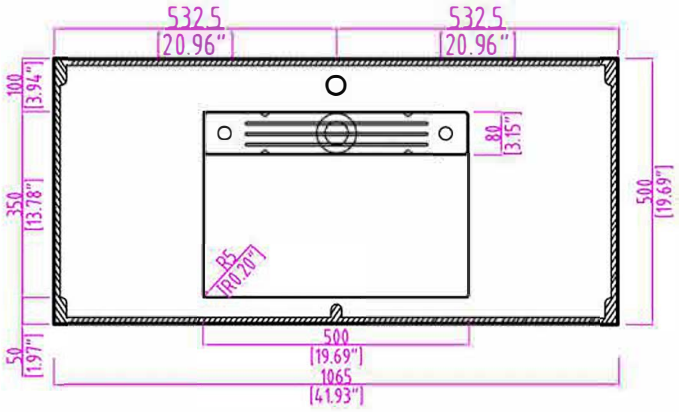
532.5
[20.96"]
532.5
[20.96"]
100
[3.94"]
350
[13.78"]
50
[1.97"]
80
[3.15"]
R5
[R0.20"]
500
[19.69"]
500
[19.69"]
1065
[41.93"]

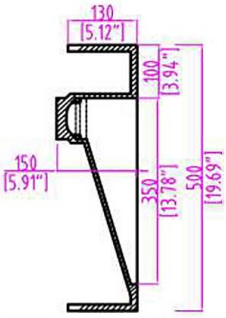
130
[5.12"]
100
[3.94"]
150
[5.91"]
350
[13.78"]
500
[19.69"]