MW-2348-1 Assembly Instruction

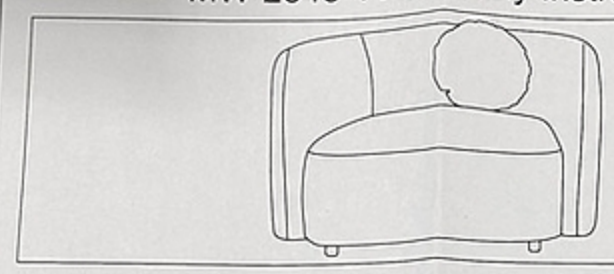

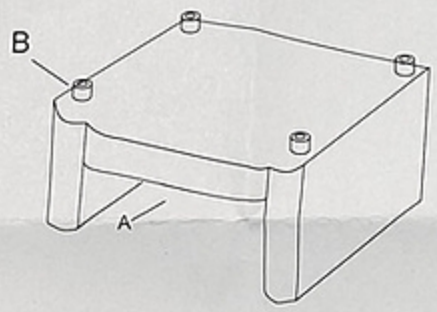

①

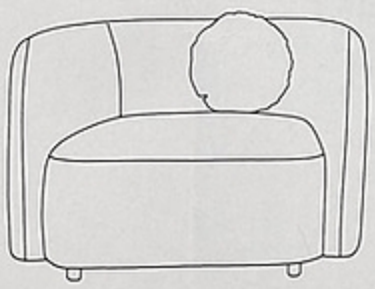

②

A	B	C	D	E	F	G	H
1PCS	4PCS						

