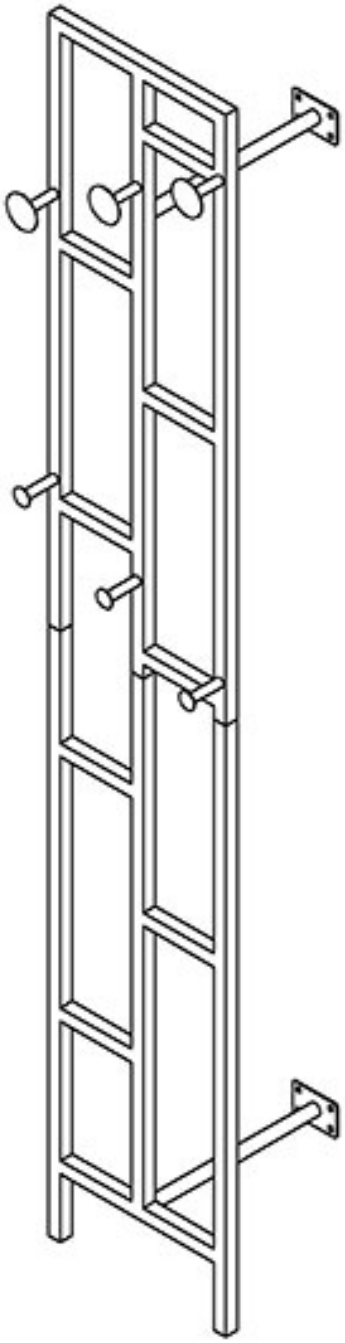

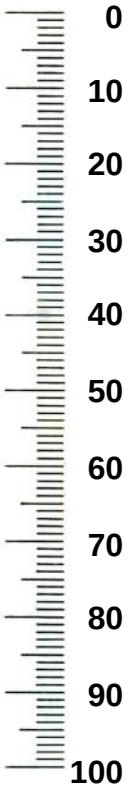
0
10
20
30
40
50
60
70
80
90
100

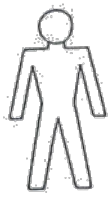

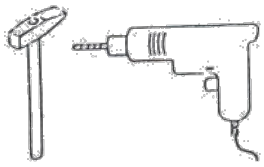

1-1x	3-2x	A-3x	C-10x 6x12mm	E-3x
2-1x	4-2x	B-2x 6x15mm	D-6x 6x32mm	F-3x
				G-2x
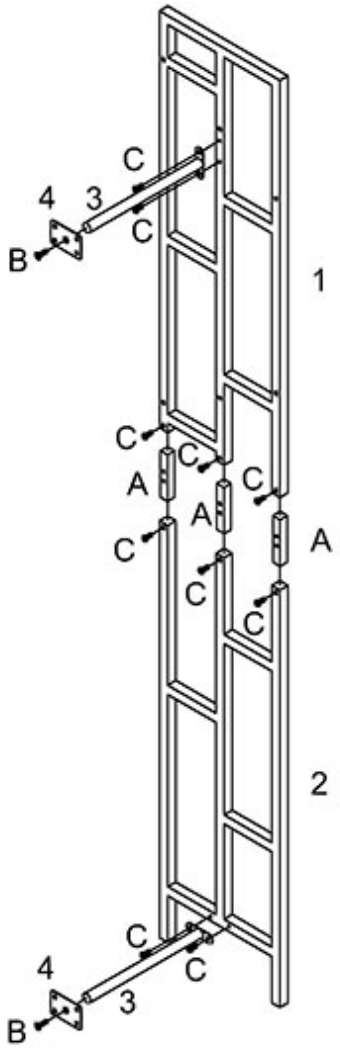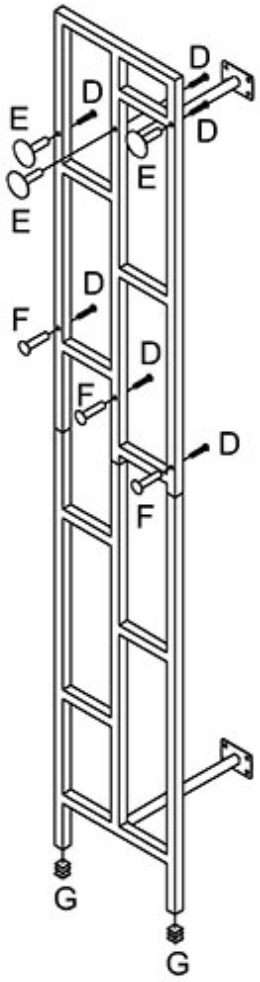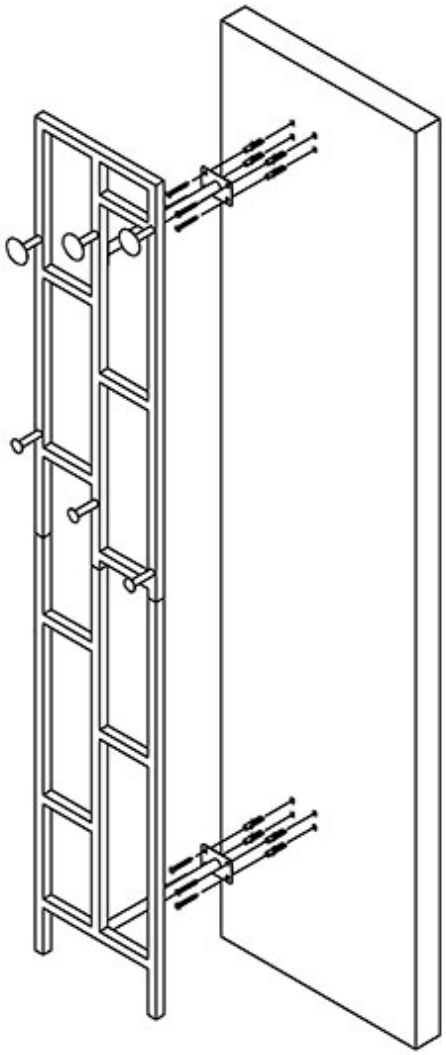
1 2 3