TV STAND

Assembly Instructions - Please keep for future reference

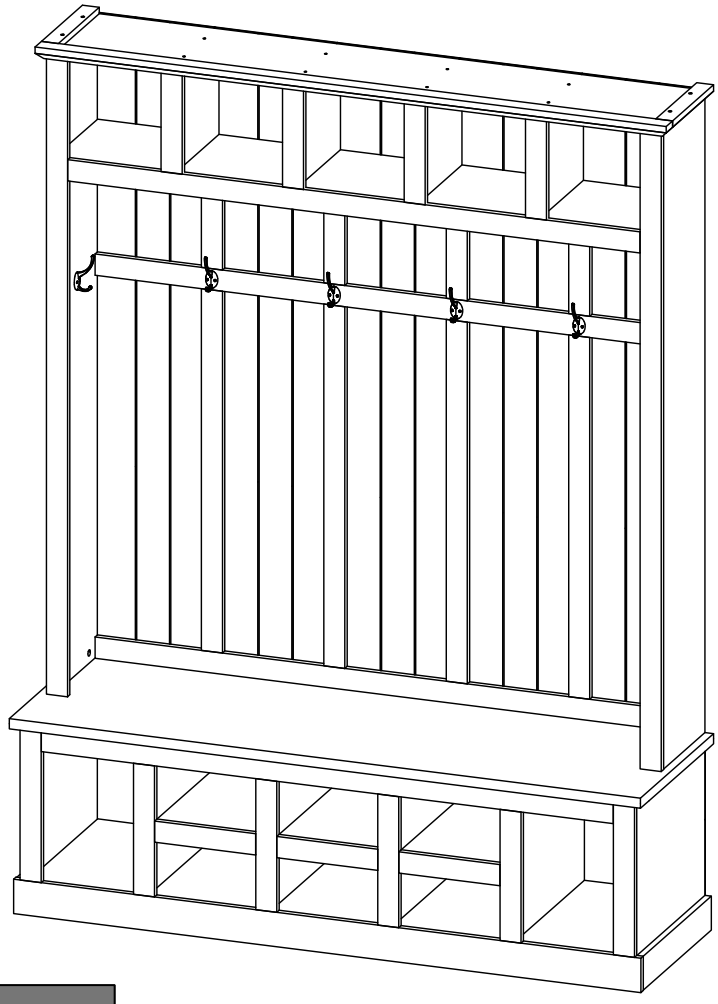

Dimensions

Width-59.1inch

Depth-18.11inch

Height-78.74inch

Important – Please read these instructions fully before starting assembly

Safety and Care Advice

Important – Please read these instructions fully before starting assembly

•Check you have all the components and tools listed on the following pages.

•Remove all fittings from the plastic bags and separate them into their groups.

•Keep children and animals away from the work area, small parts could choke if swallowed.

•Make sure you have enough space to layout the parts before starting.

•During assembly do not stand or put weight on the product, this could cause damage.

•Assemble the item as close to its final position (in the same room) as possible.

•Assemble on a soft level surface to avoid damaging the unit or your floor.

•Parts of the assembly will be easier with 2 people.



•To reduce the likelihood of damaging your product please ensure that your power drill is set on a low torque setting.

Care and maintenance

•Only clean using a damp cloth and mild detergent, do no use bleach or abrasive cleaners.

•From time to time check that there are no loose screws on this unit.

•This product should not be discarded with household waste. Take to your local authority waste disposal centre.

Handy Hints

•Assemble all parts and bolts loosely during assembly, only once the product is complete should you fully tighten the bolts

•Regularly check and ensure That all bolts and fittings are tightened properly.

WARNING
In order to help prevent overturning – please follow these instructions

To help prevent product toppling over please follow the below steps:-

Use the anti tip stap or wall fixing method provided (if applicable)
Do not allow children to climb or hang on the furniture
Do not open more than one drawer at a time
Do not place heavy items in the top drawers
Do not place heavy items on top of the furniture, unless the furniture has been designed for this purpose

Components - Fittings

Please check you have all the panels listed below

Note: The quantities below are the correct amount to complete the assembly. In some cases more fittings may be supplied than are required.

(A1)  Cam lock x 78 + 2	(A2)  Cam bolt x 78 + 2	(A3) 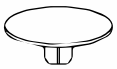 Cam cap x 74 + 2	(B)  8*30mm Dowel x 100 + 2
(C)  6*50mm Screw x 28 + 2	(D)  Allen key x 1	(E) 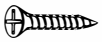 3.5*16mm Screw x 16 + 2	(F)  4*16mm Screw x 100 + 2
(G)  16mm Nail x 33	(H)  Nail leg x 8	(I) 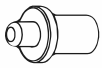 Spring door support x 16 + 2	(J)  L bracket x 2
(K)  Hook x 6	(L1)  4*12mm Screw x 2	(L2) 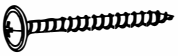 4*50mm Screw x 2	(L3)  Wall plug x 2
(L4)  PVC strip x 2			

Tools required

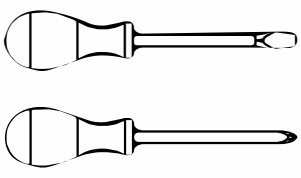

Philips screwdriver
(medium & large)

Using Camlocks

Step 1

Connect the male camlock as diected in the assembly instructions using a screwdriver.

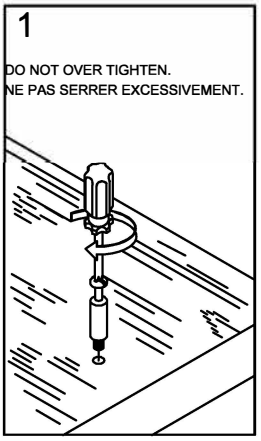

Step 2

Push the male camlock into the entry hole.

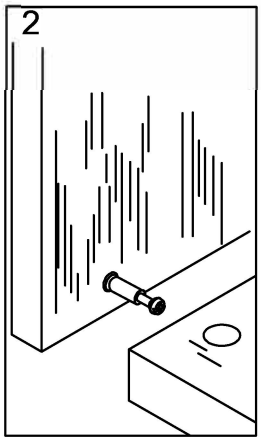

Step 3

Insert the female camlock as shown in the instruction.

Note： ensure that the arrow on the top of the camlock points towards the entry hole for the male camlock.

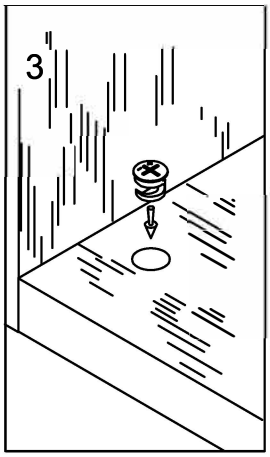

Step 4

Turn the female camlock clockwise with a screwdriver.

You should feel a click when the camlock is locked in place.

The joint is now secure.

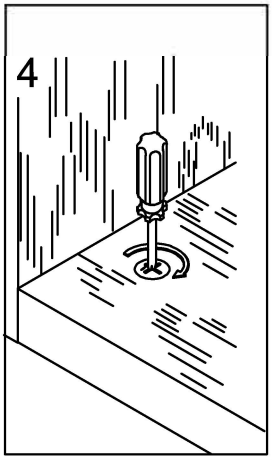

Components - Parts

Please check you have all the panels listed below.
Please note that there are 2 boxes of this product.

Box A

① 	⑤ 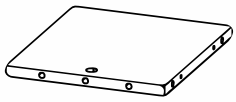	⑥ 
Top Panel (Up) 1500*298*30 1 PC	Center Panel (Up) 263*234*15 4 PCS	Back Bone (Up) 1428*50*15 1 PC
⑦ 	⑧ 	⑨ 
Back Bone (Down) 1428*50*15 1 PC	Front Bone Long (Up) 1360*50*15 1 PC	Side Bone (L&R) 1500*50*15 2 PCS
⑩ 	⑪ 	⑫ 
Center Bone (Up) 234*50*15 4 PCS	Back Bone Long 853*50*15 4 PCS	Back Bone Short 298*50*15 4 PCS
⑮ 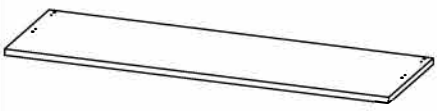	⑯ 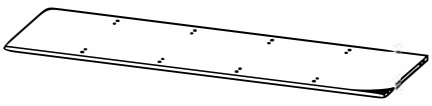	㉓ 
Top Panel (Center) 1500*460*24 1 PC	Bottom Panel (Down) 1428*430*15 1 PC	Front Bone Long (Down) 1359*50*15 1 PC

Components - Parts

(24) 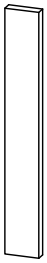	(25) 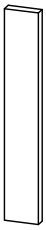	(26) 
Down Side Bone (L&R) 359*50*15 2 PCS	Down Center Bone 309*50*15 4 PCS	Down Middle Bone 240*50*15 3 PCS
(27) 	(28) 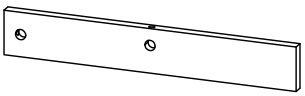	
Leg Panel (Center) 1491*81*15 1 PC	Center Leg 430*65*15 1 PC	

Components - Parts

Box B

② 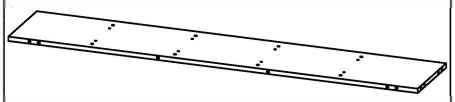	③ 	④ 
Bottom Panel (Up) 1428*263*15 1 PC	Side Panel (L) 1500*263*15 1 PC	Side Panel (R) 1500*263*15 1 PC
⑬ 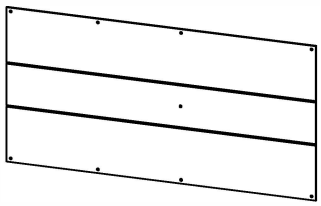	⑭ 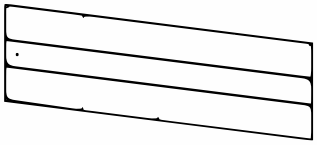	⑰ 
Back Panel (Up) 587*291*2.5 5 PCS	Back Panel (Center) 940*291*2.5 5 PCS	Down Side Panel (L) 440*430*30 1 PC
⑱ 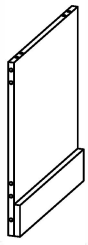	⑲ 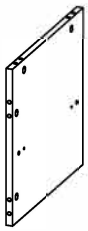	⑳ 
Down Side Panel (R) 440*430*30 1 PC	Down Center Panel (L) 430*360*15 1 PC	Down Center Panel (R) 430*360*15 1 PC
㉑ 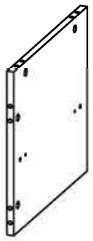	㉒ 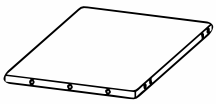	㉙ 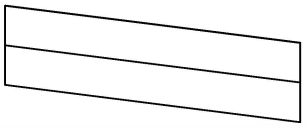
Down Center Panel 430*360*15 2 PCS	Middle Panel 430*275*15 3 PCS	Back Panel (Down) 1458*194*2.5 1 PC
		
Hardware Pack 1 PCK		

Assembly Instructions

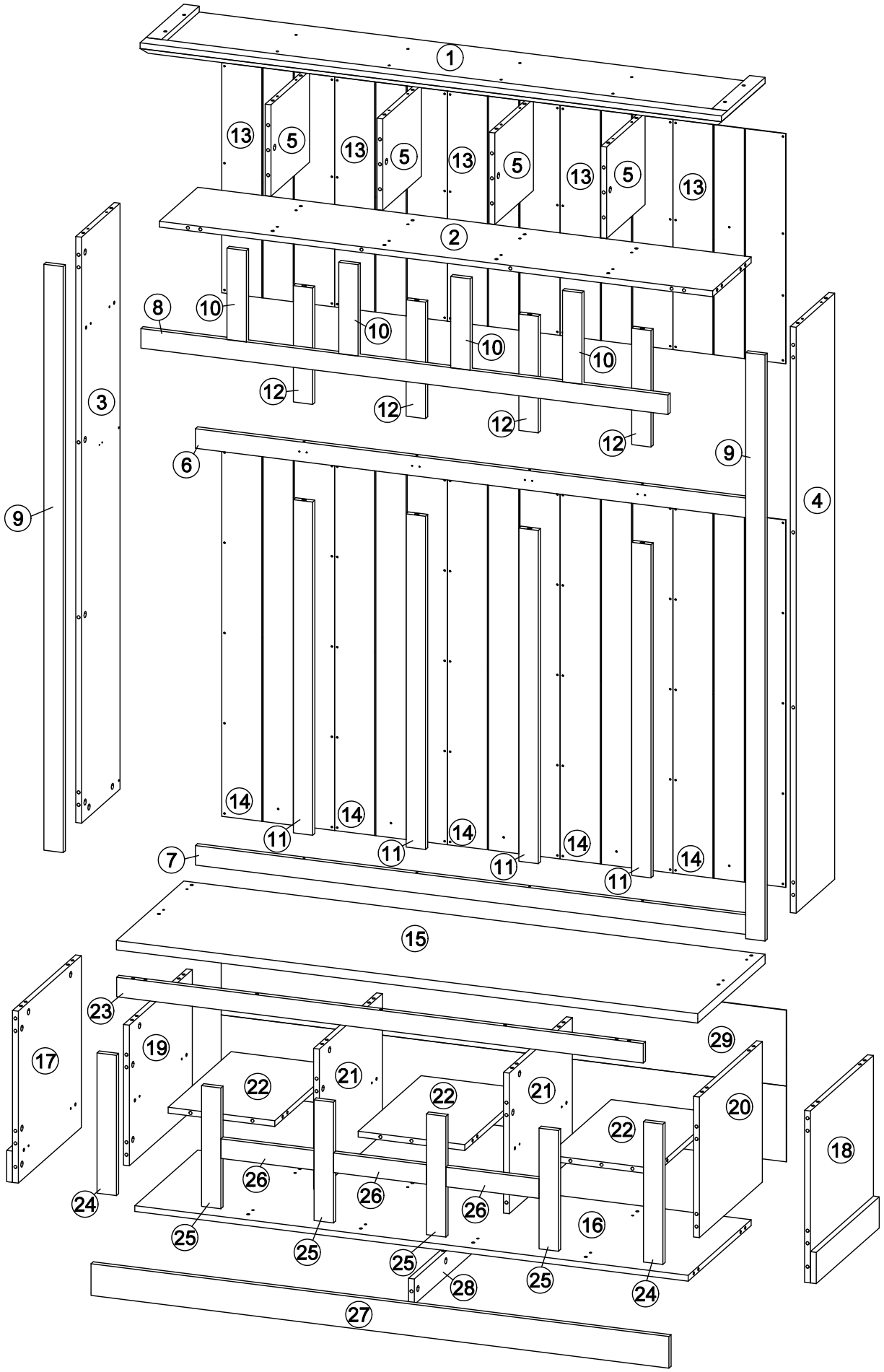

STEP 1

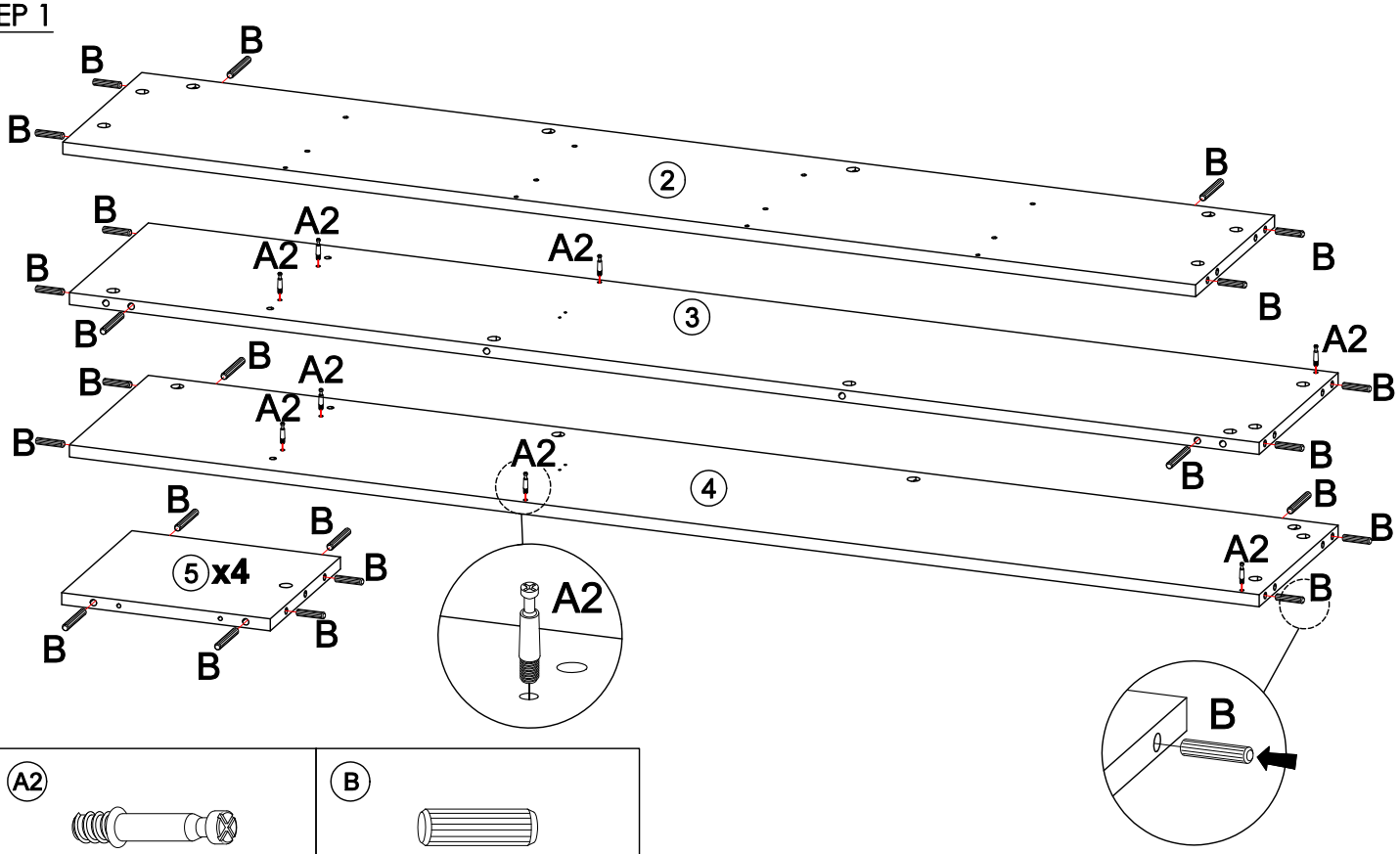

A2	B
Cam bolt x 8	8*30mm Dowel x 42

STEP 2

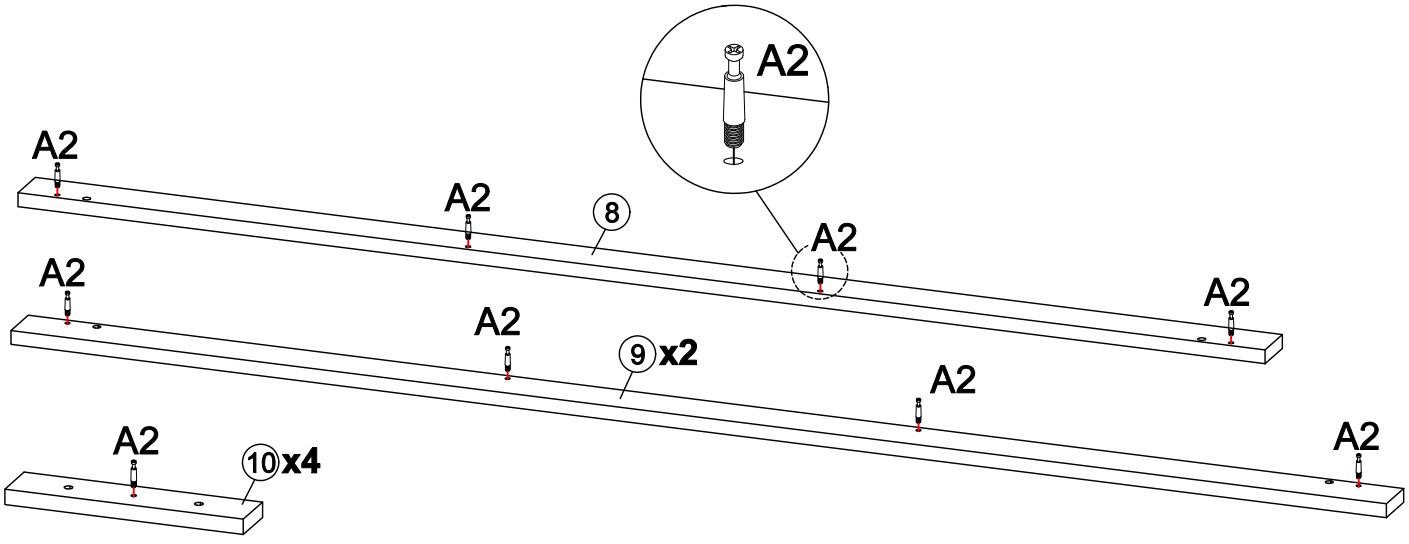

A2
Cam bolt x 16

STEP 3

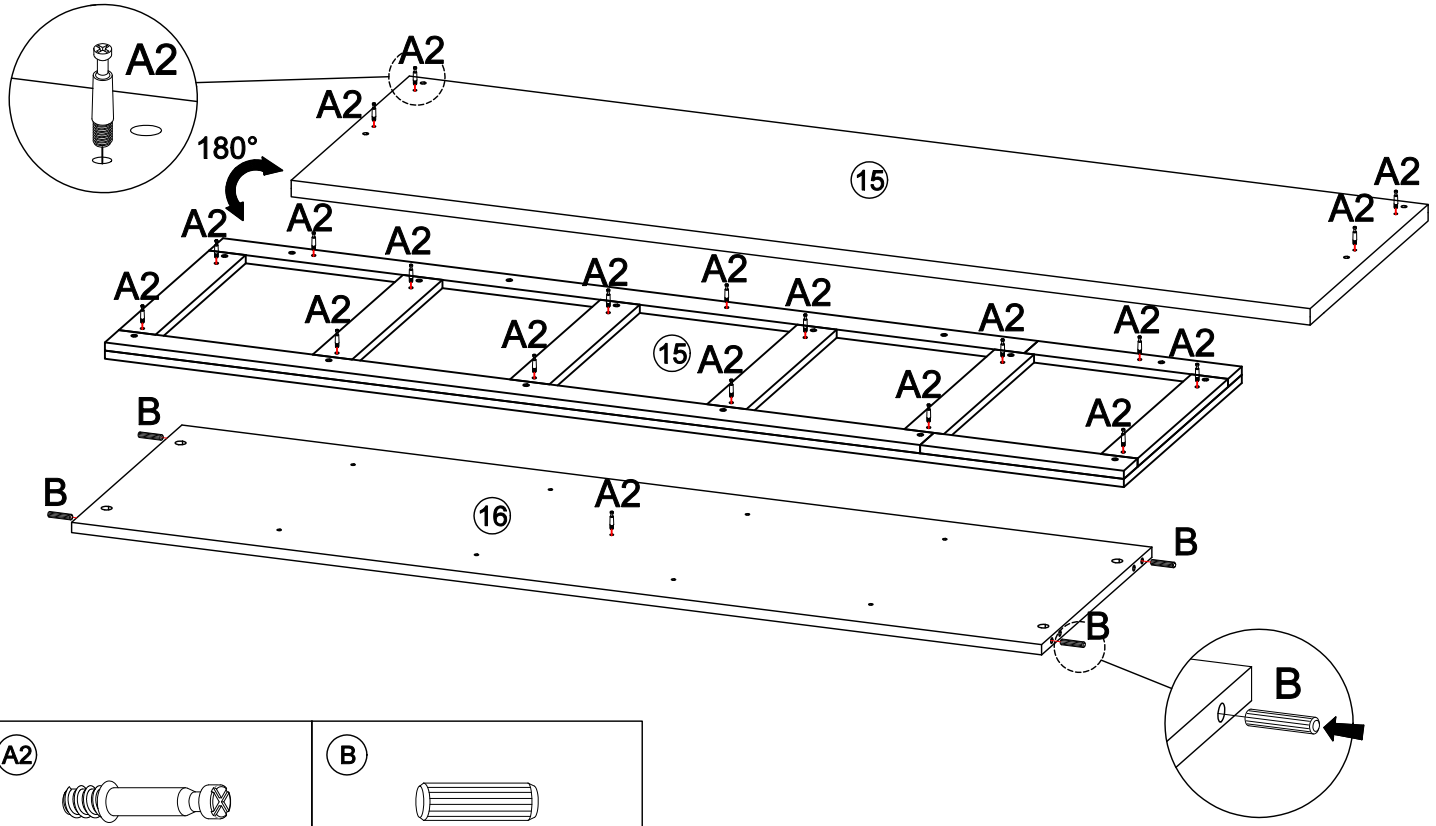

A2	B
Cam bolt x 20	8*30mm Dowel x 4

STEP 4

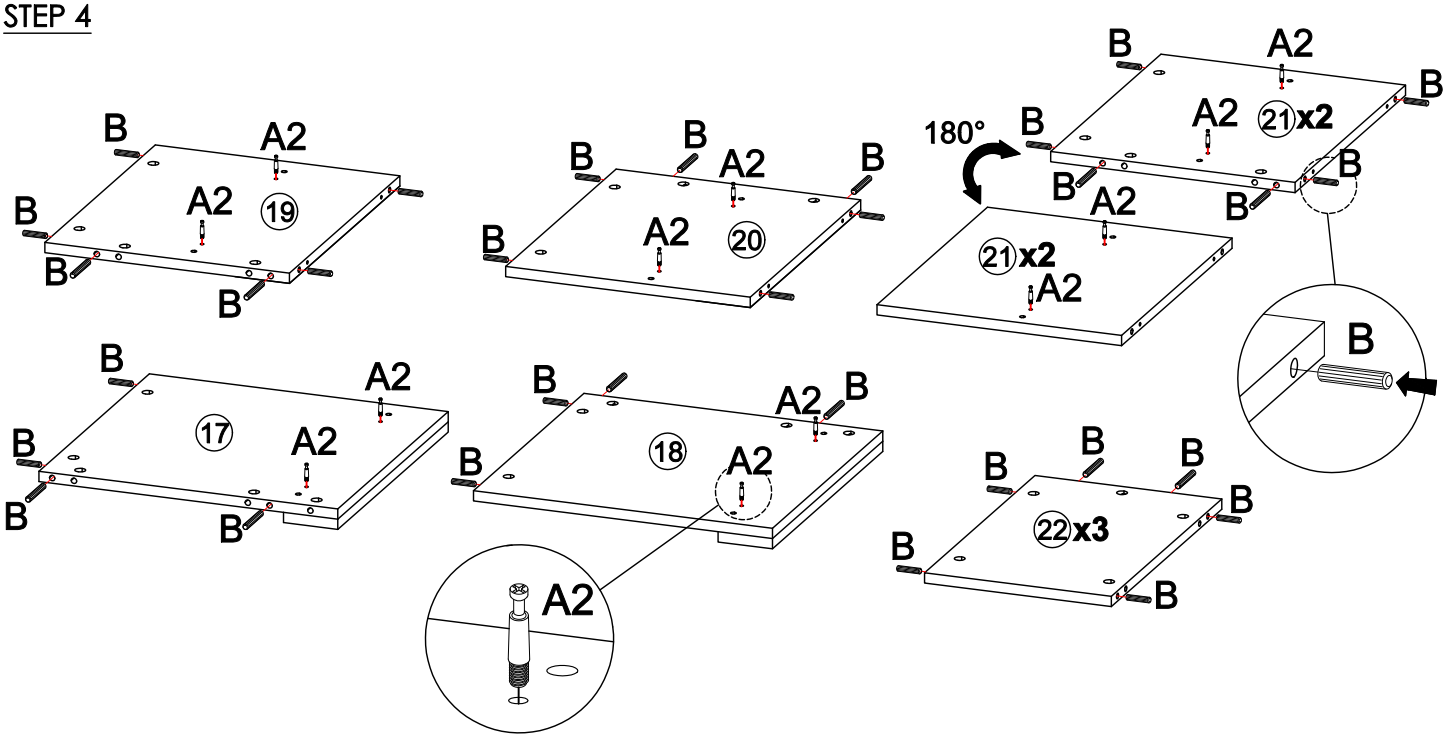

A2	B
Cam bolt x 16	8*30mm Dowel x 50

STEP 5

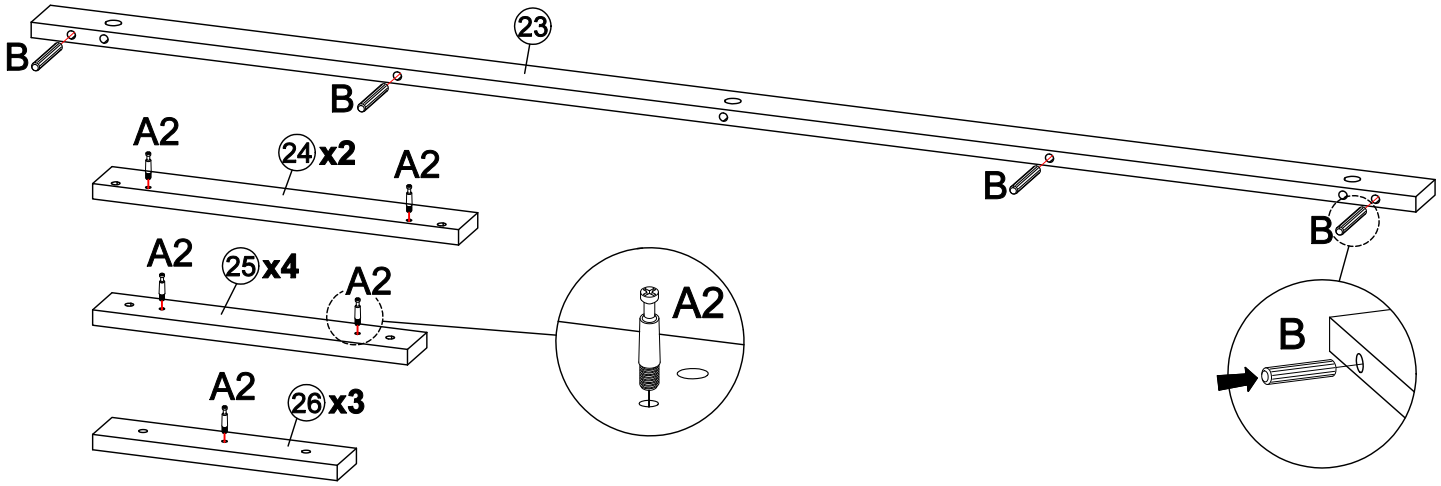

A2	B
Cam bolt x 15	8*30mm Dowel x 4

STEP 6

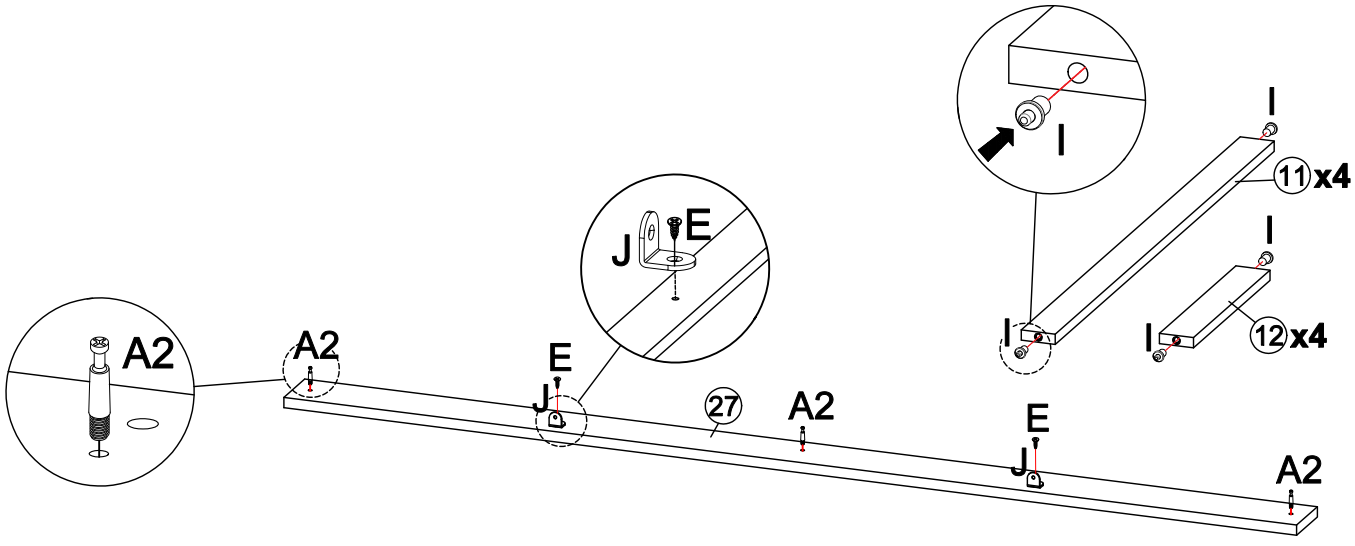

A2	E	J	I
Cam bolt x 3	3.5*16mm Screw 2	L bracket x 2	Spring door support x 16

STEP 7

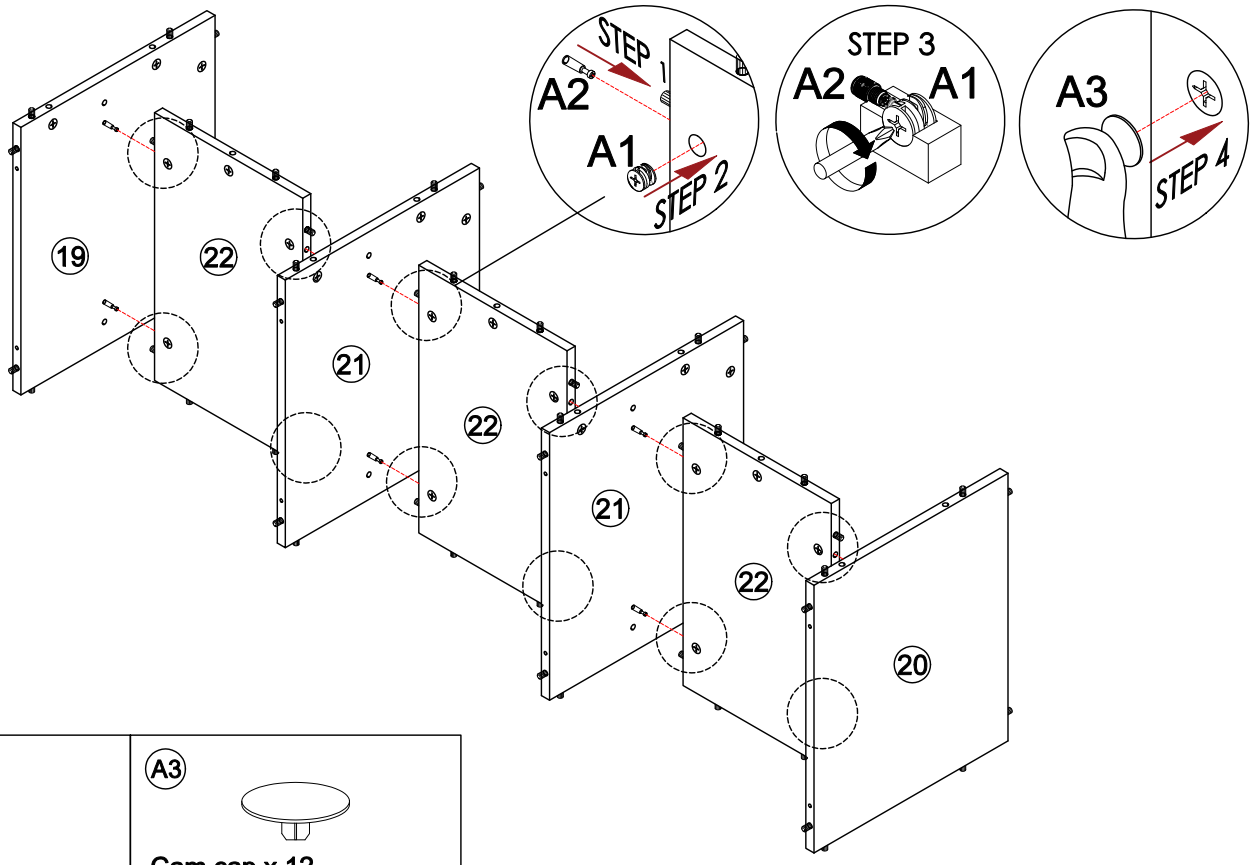

A1	A3
Cam lock x 12	Cam cap x 12

STEP 8

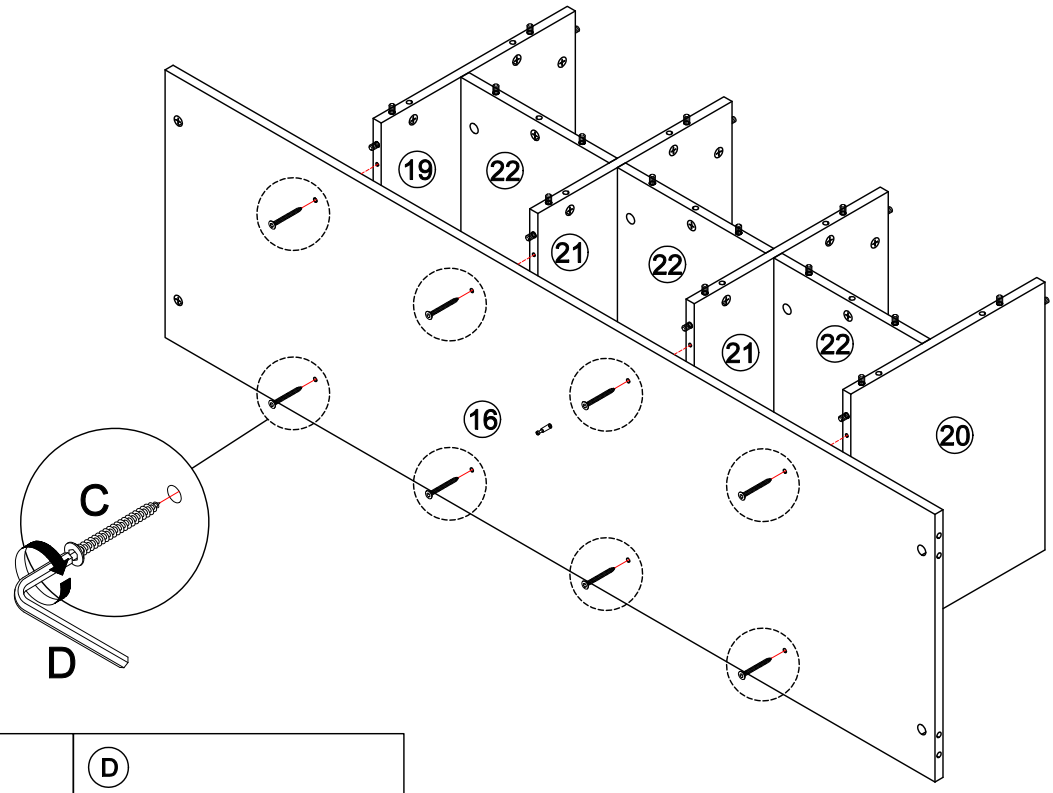

C	D
6*50mm Screw x 8	Allen key x 1

STEP 9

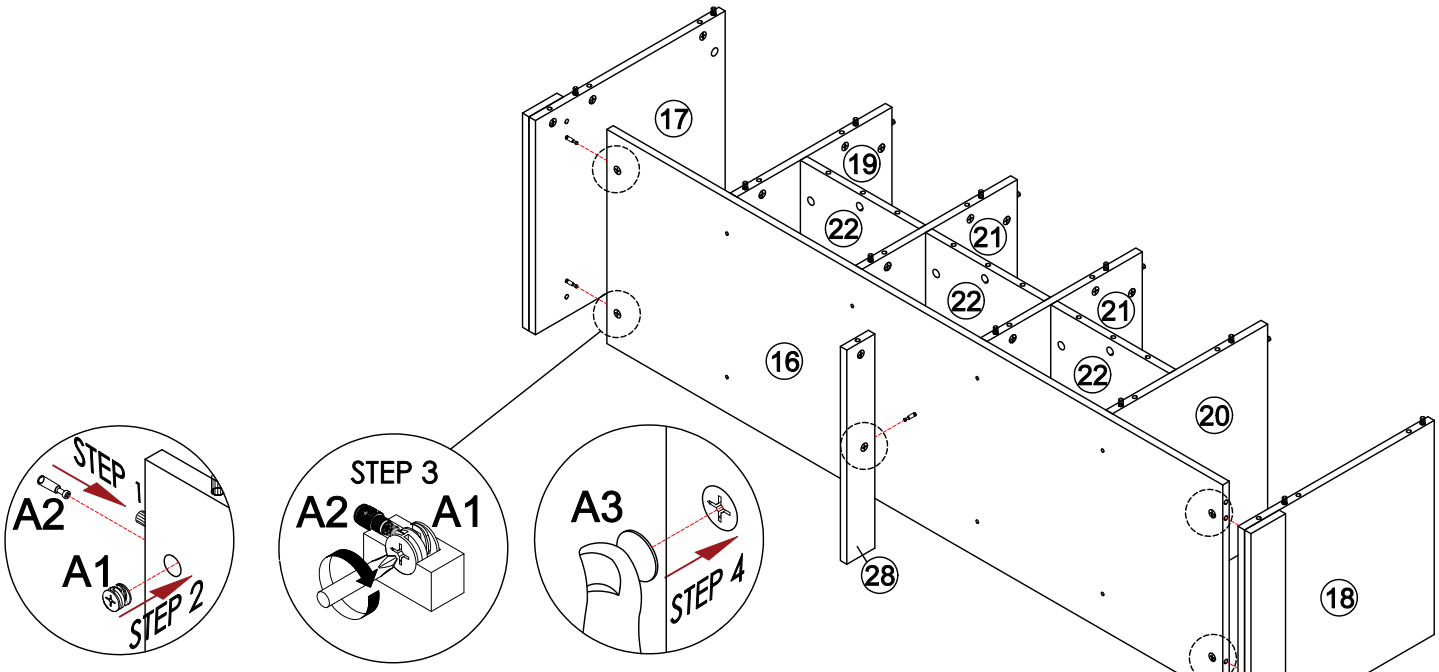

A1	A3
	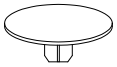
Cam lock x 5	Cam cap x 5

STEP 10

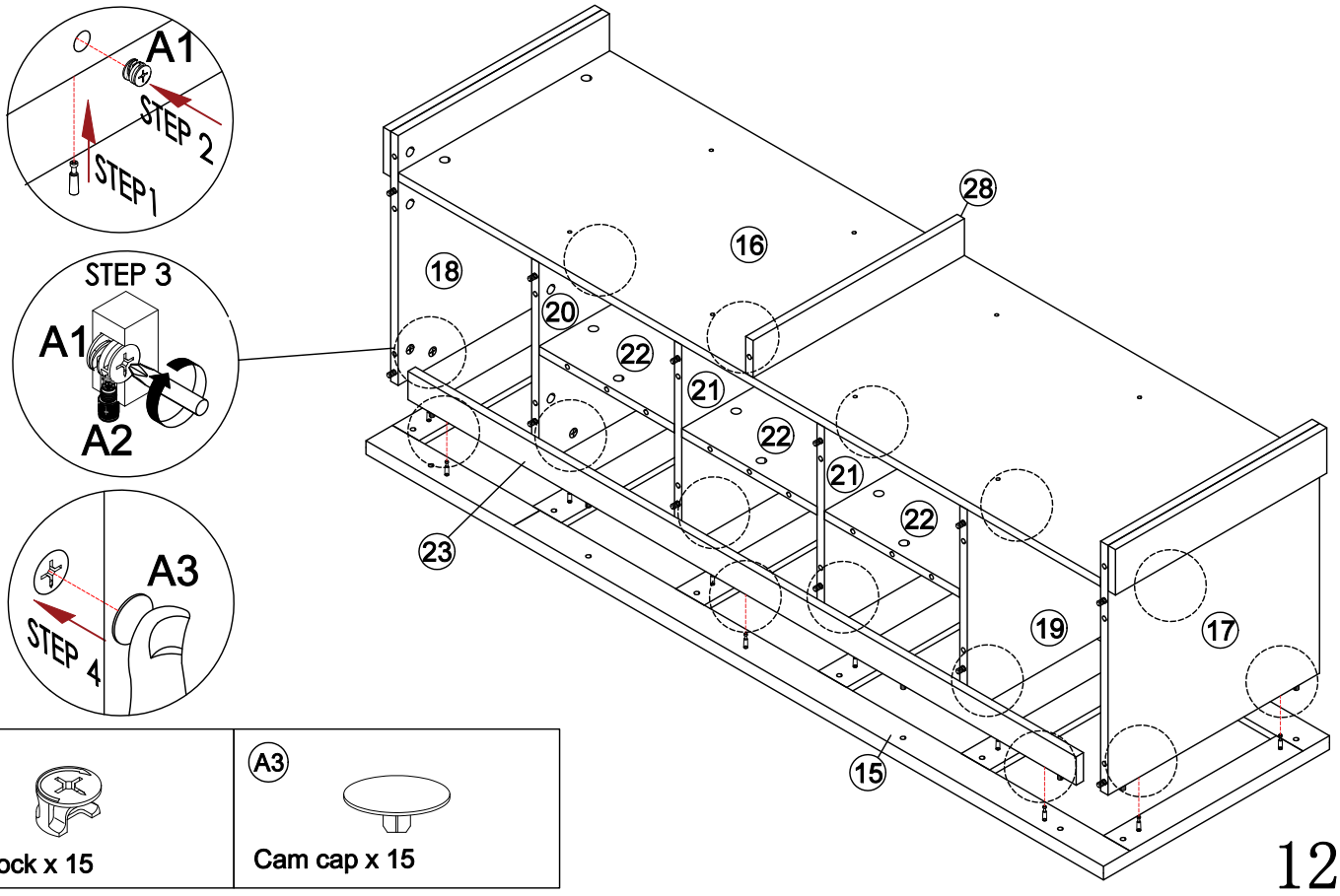

A1	A3
Cam lock x 15	Cam cap x 15

STEP 11

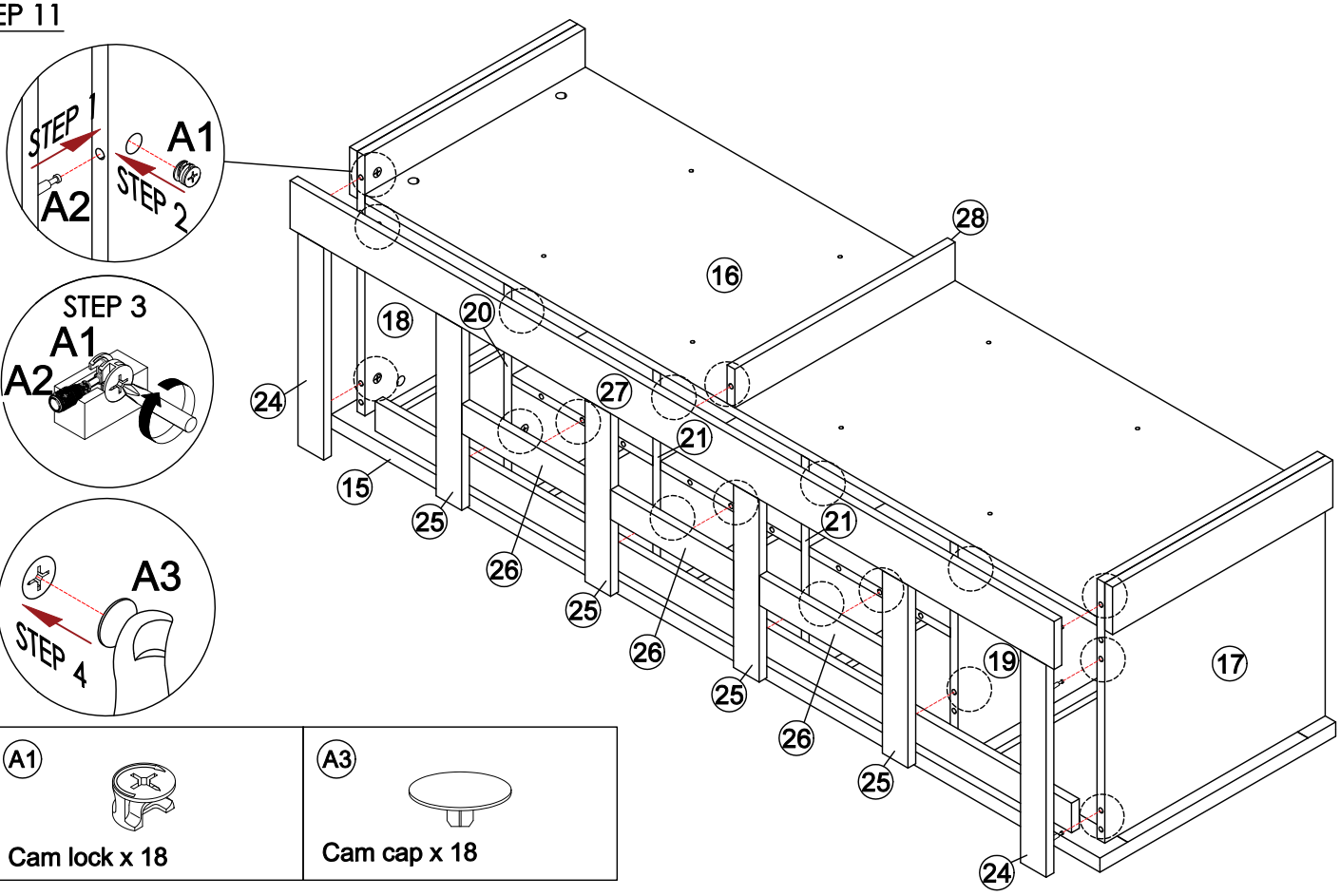

A1	A3
Cam lock x 18	Cam cap x 18

STEP 12

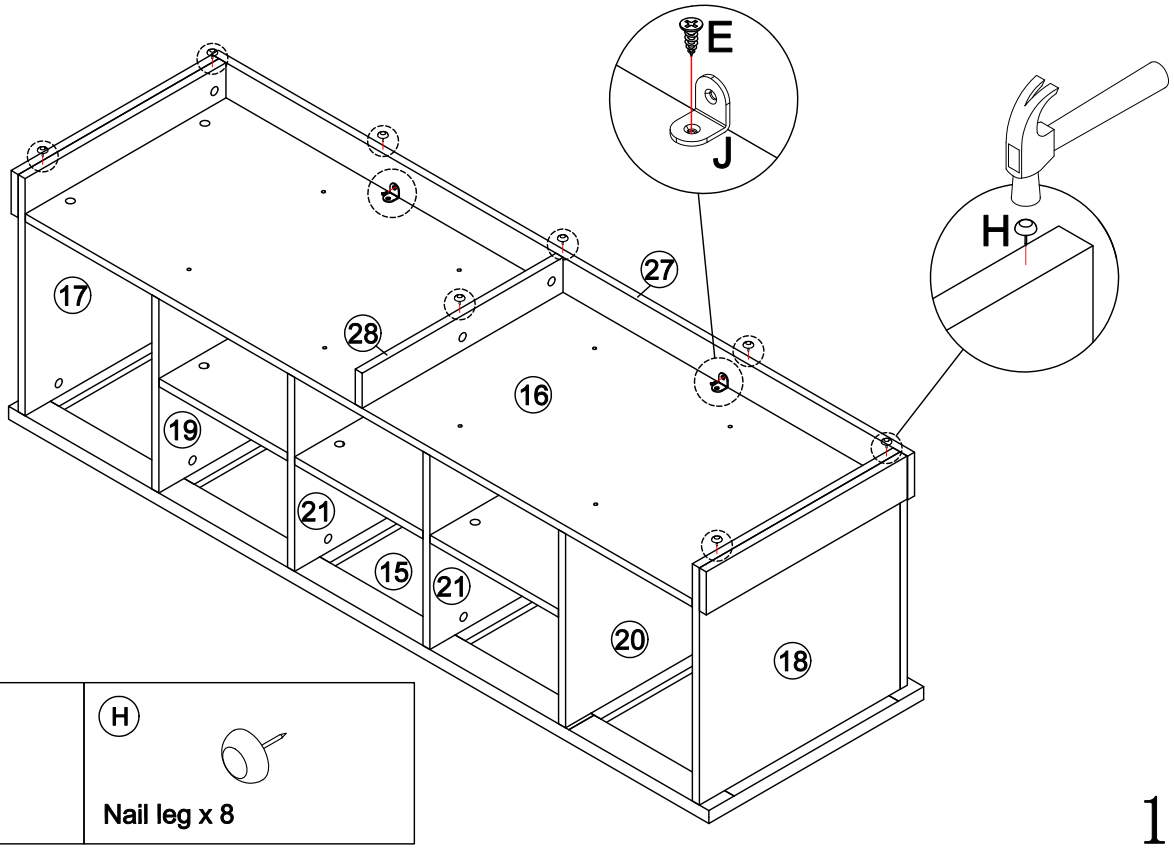

E	H
3.5*16mm Screw 2	Nail leg x 8

STEP 13

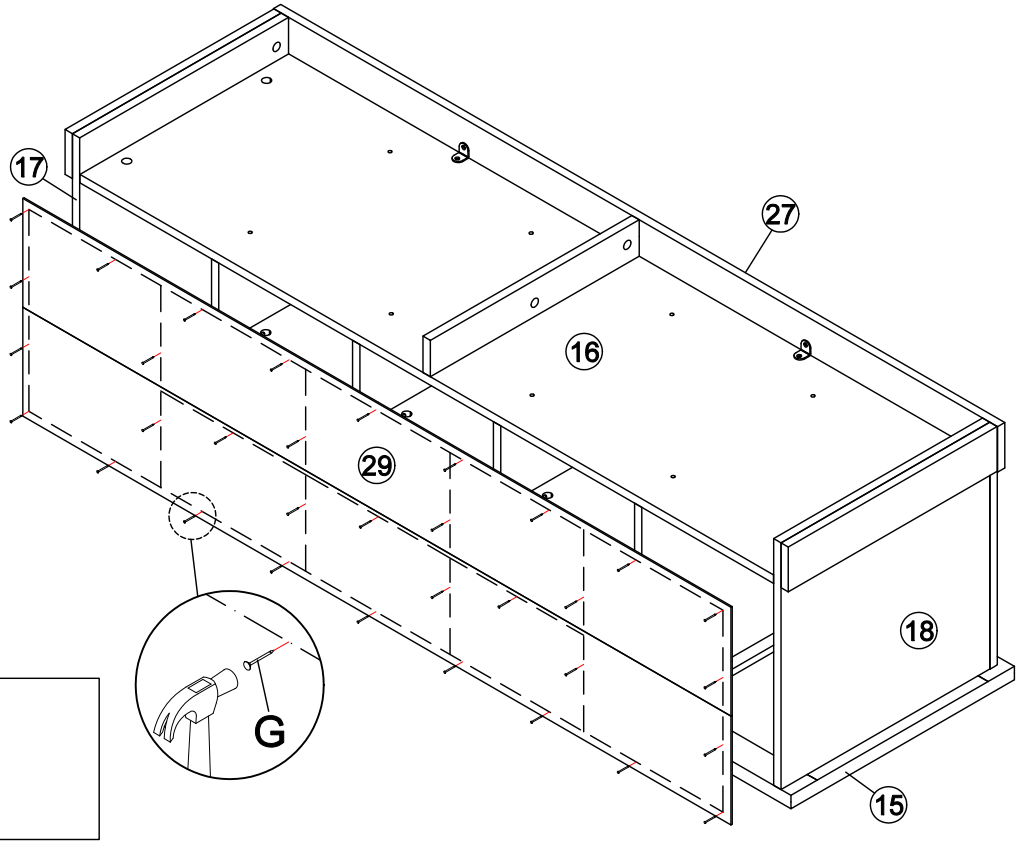

G
16mm Nail x 33

STEP 14

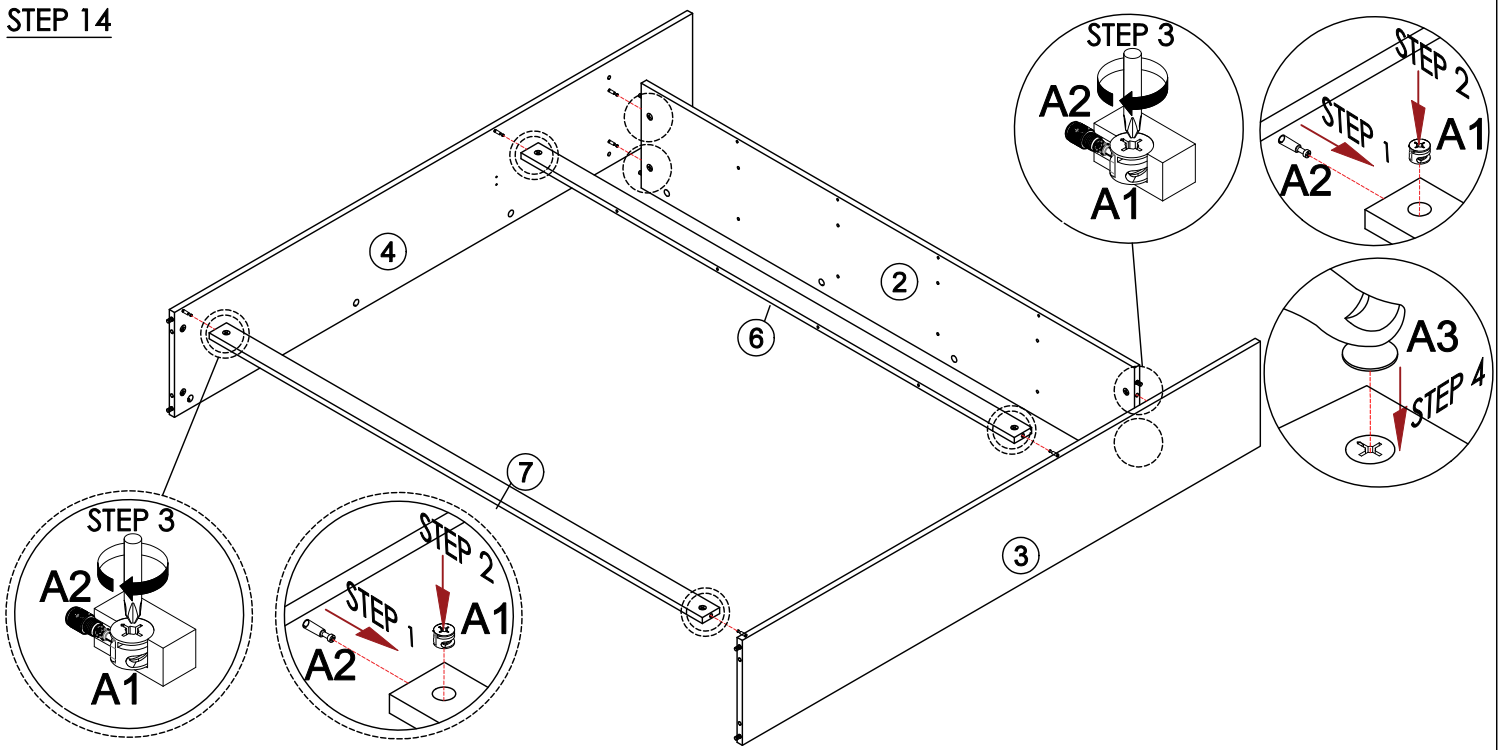

A1	A1	A3
Cam lock x 4 (Without cap)	Cam lock x 4	Cam cap x 4

STEP 15

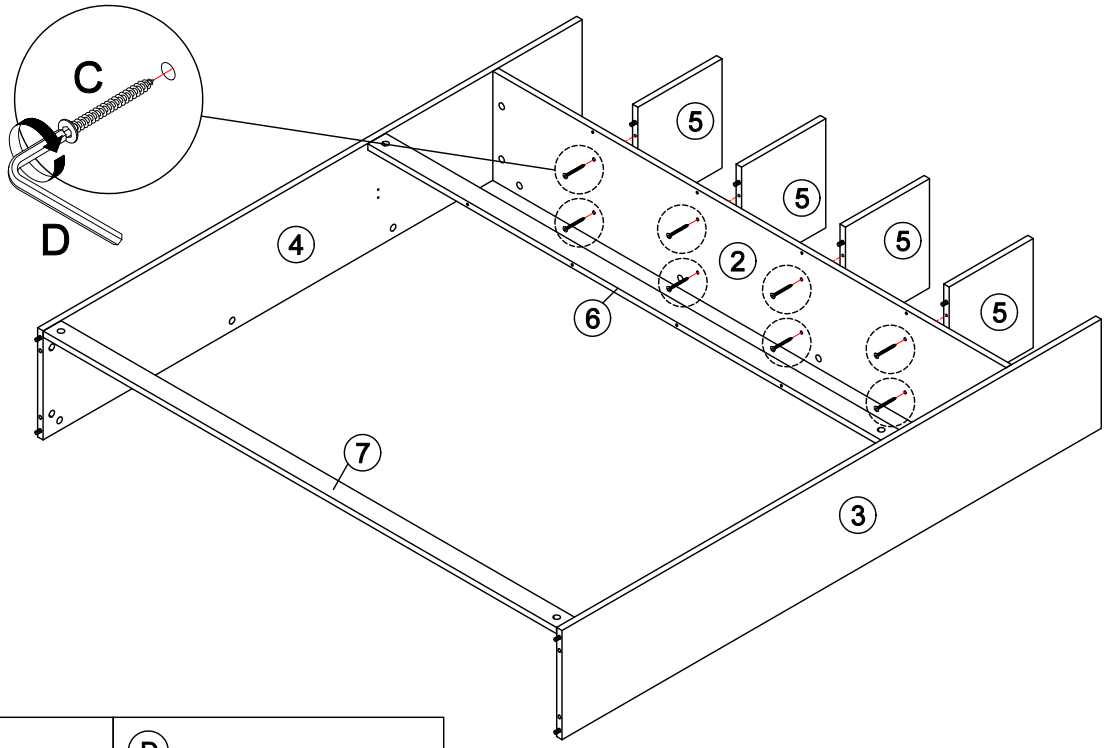

C	D
6*50mm Screw x 8	Allen key x 1

STEP 16

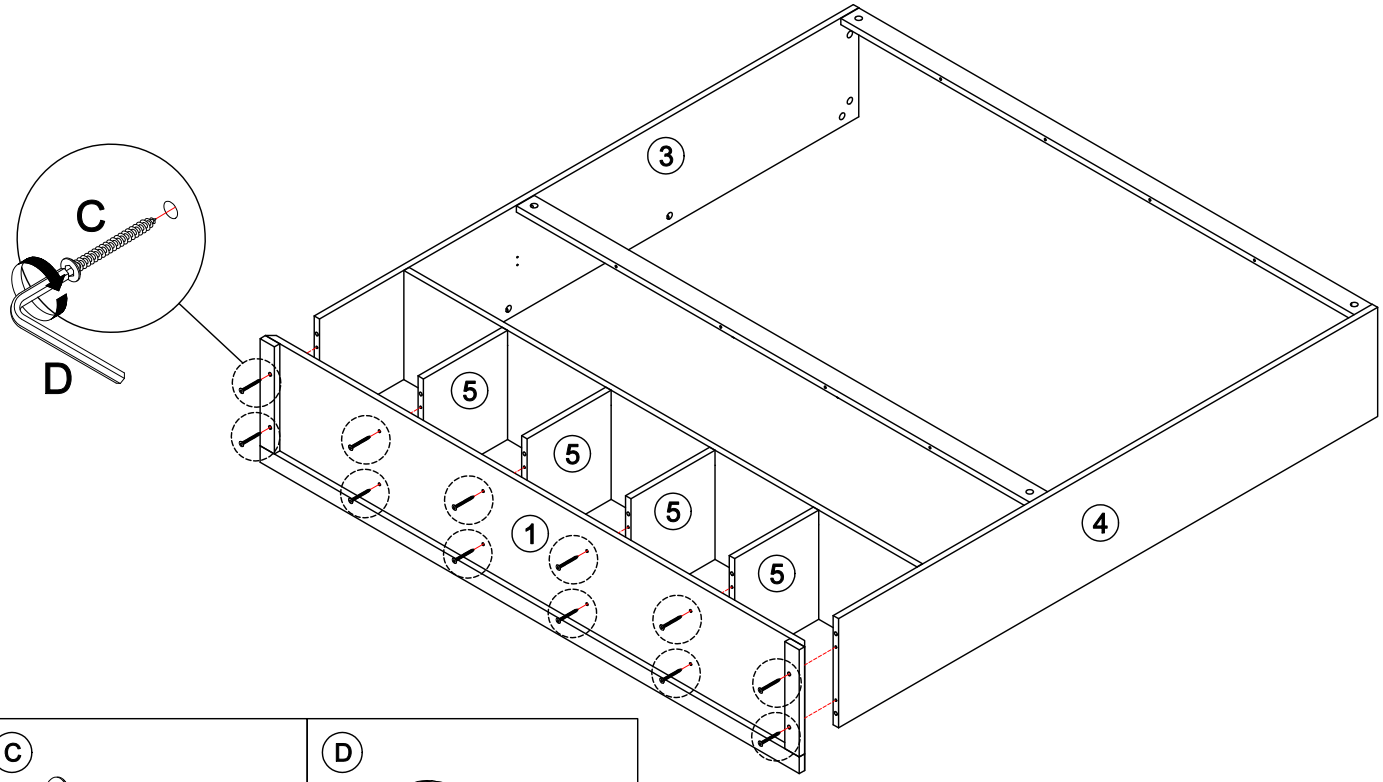

C	D
6*50mm Screw x 12	Allen key x 1

STEP 17

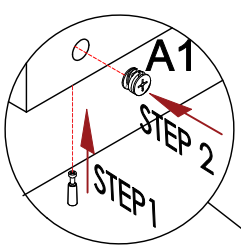

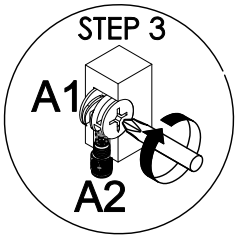

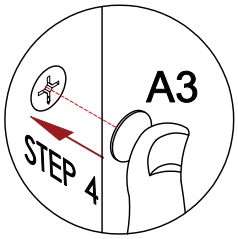

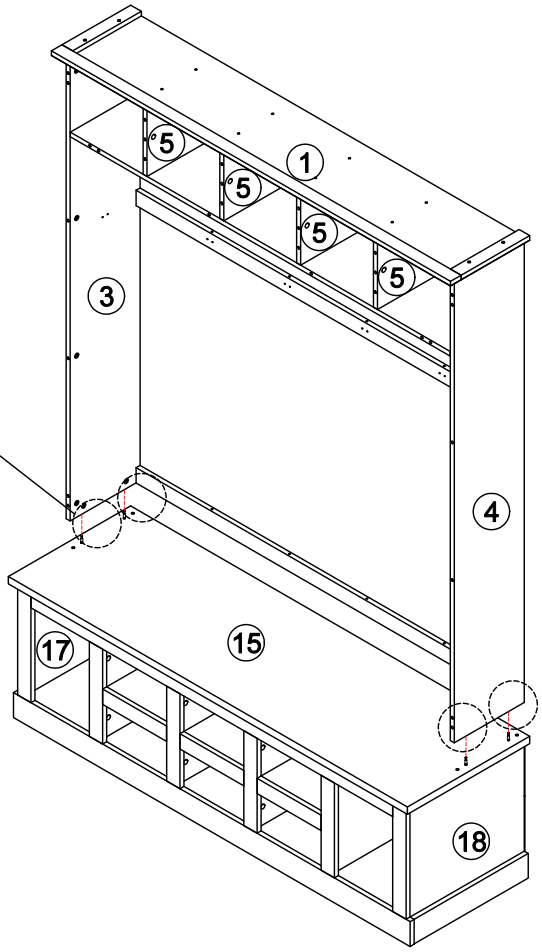

A1	A3
	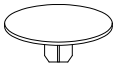
Cam lock x 4	Cam cap x 4

STEP 18

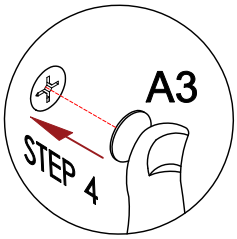

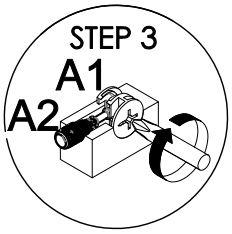

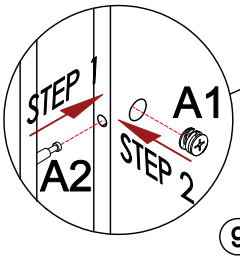

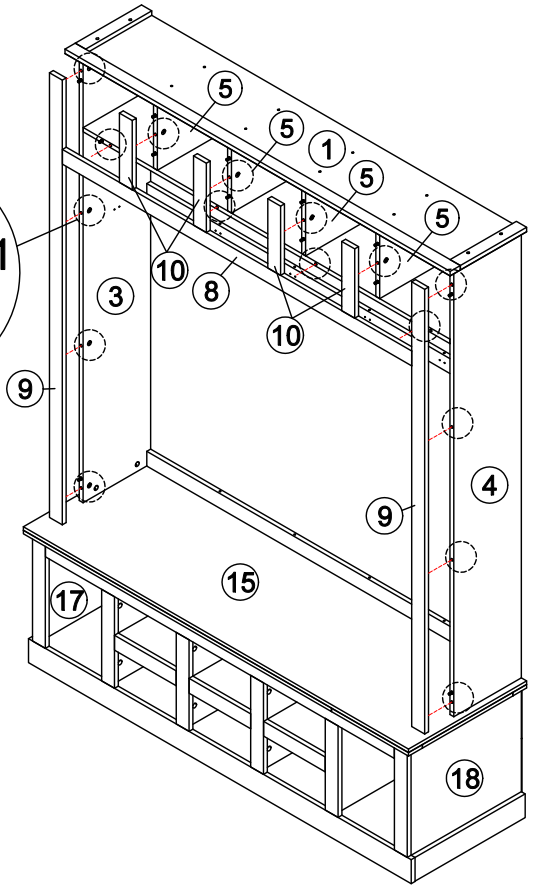

A1	A3
	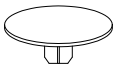
Cam lock x 16	Cam cap x 16

STEP 19

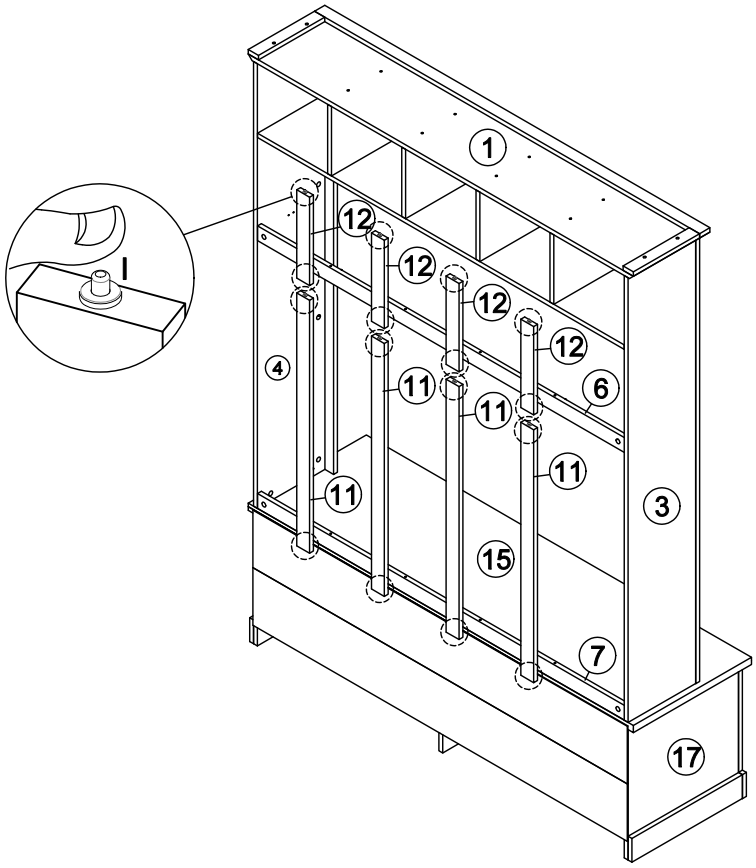

STEP 20

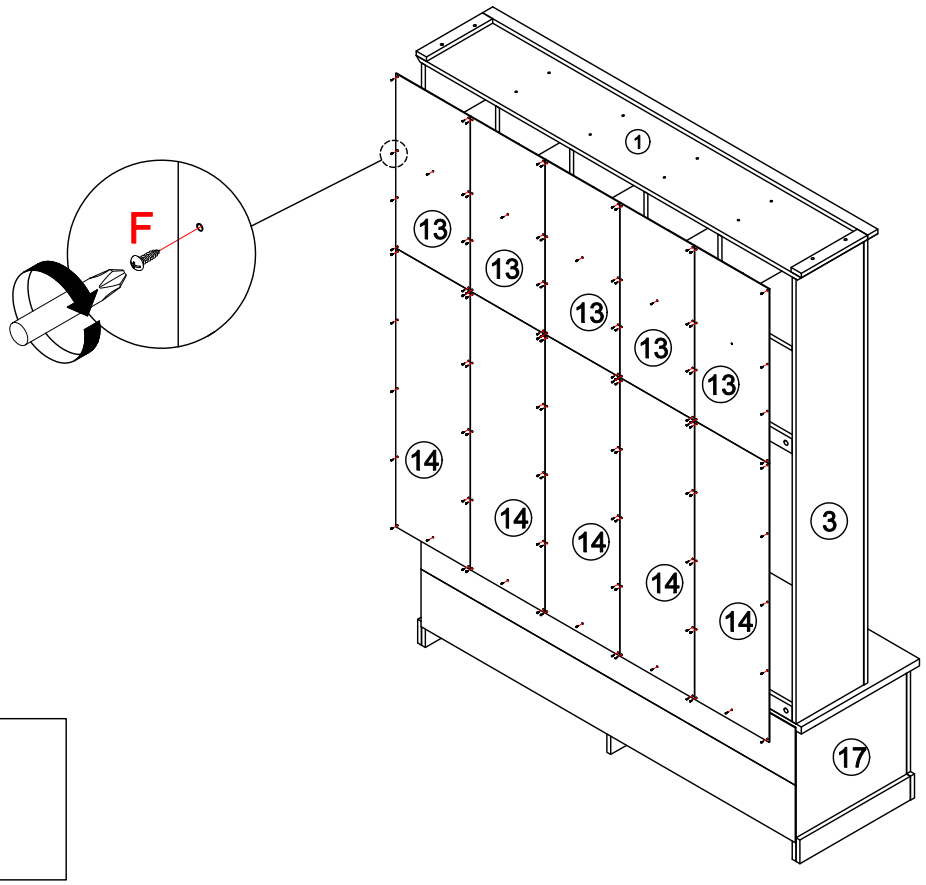

F



4*16mm Screw x 100

STEP 21

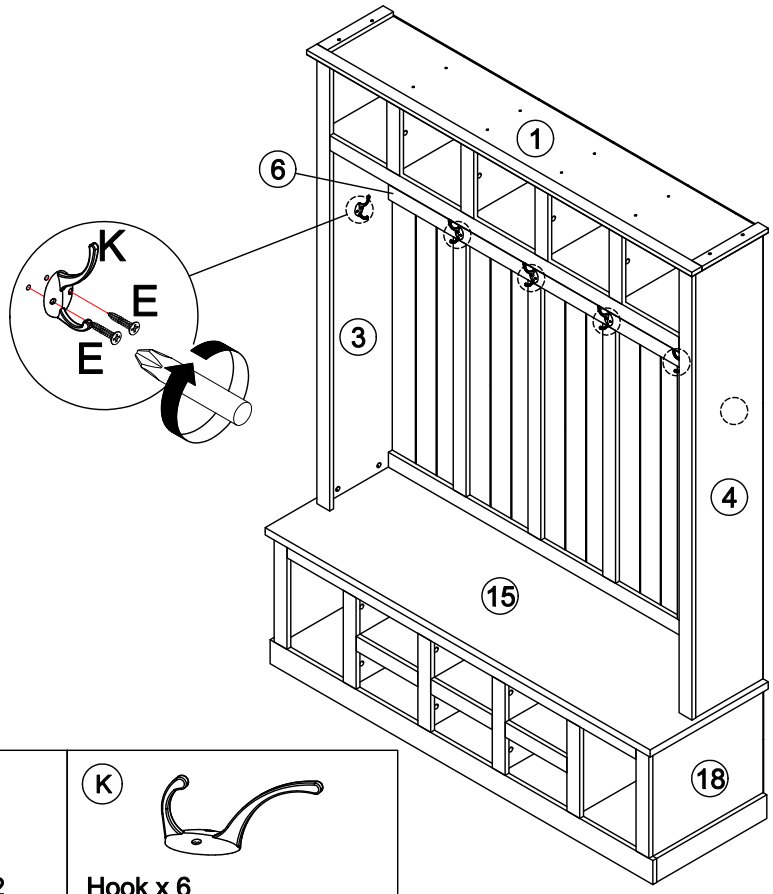

E	K
	
3.5*16mm Screw x 12	Hook x 6

STEP 22

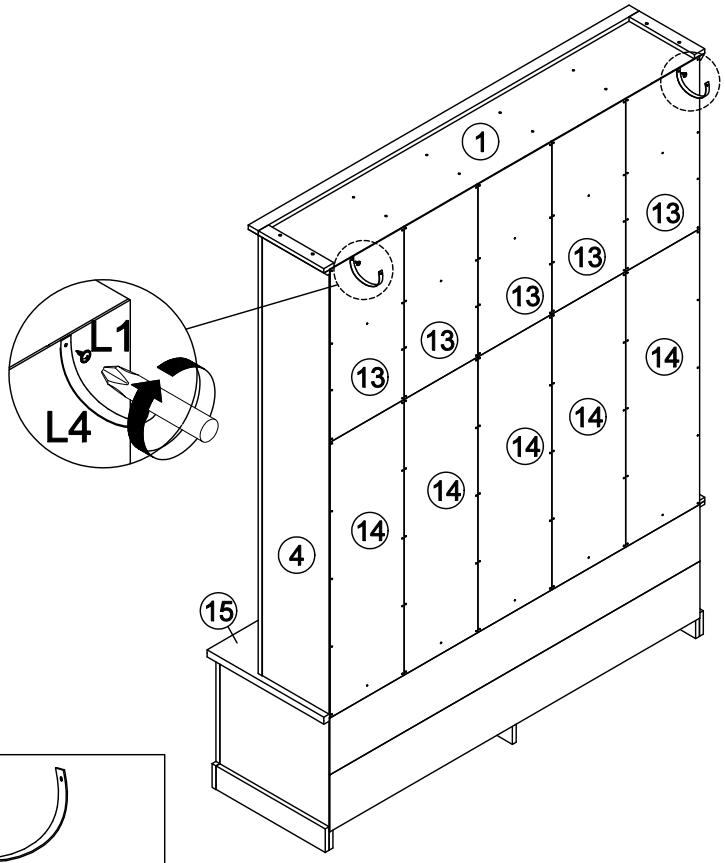

L1	L4
	
4*12mm Screw x 2	PVC strip x 2

STEP 23

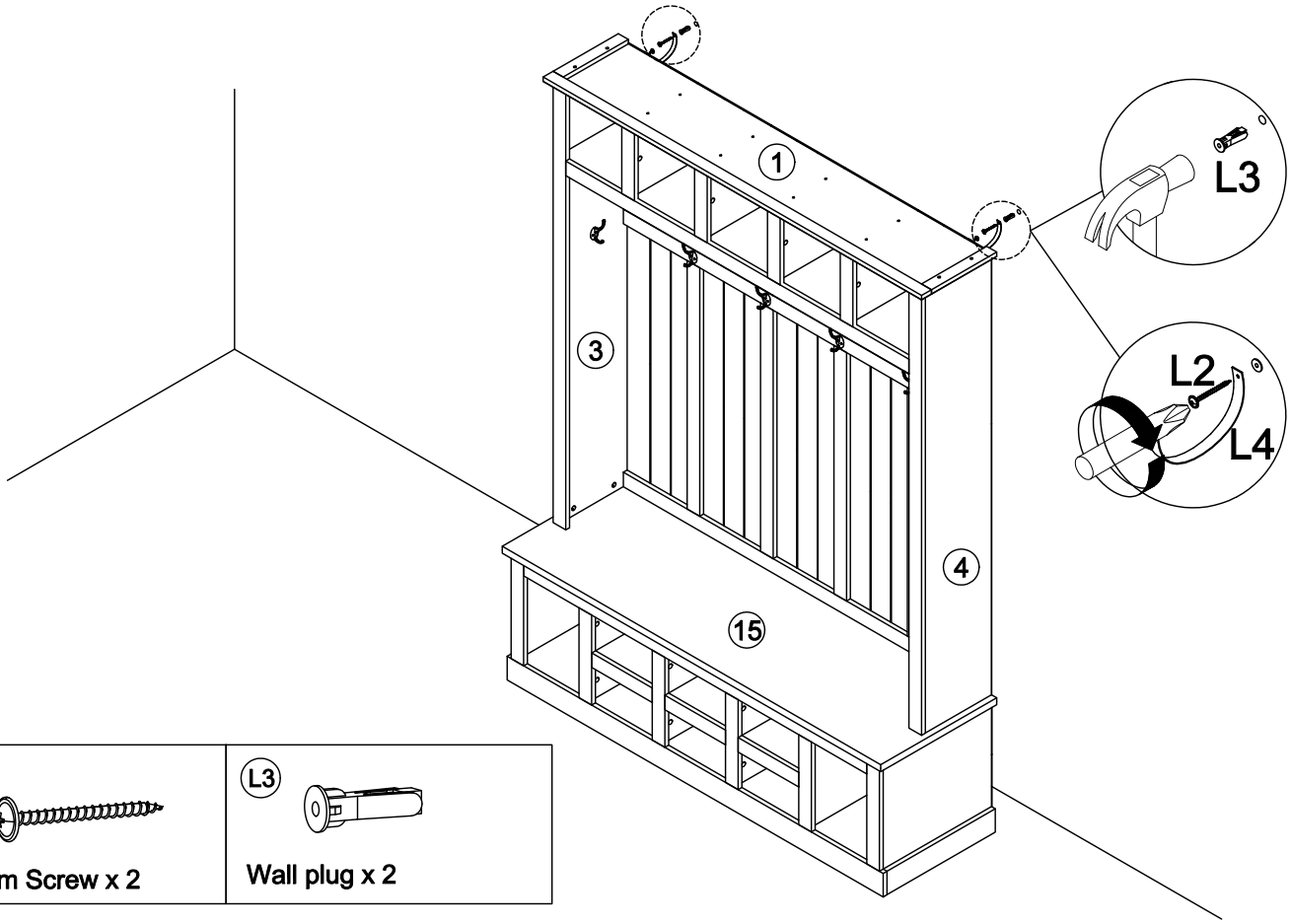

L2	L3
4*50mm Screw x 2	Wall plug x 2

STEP 24

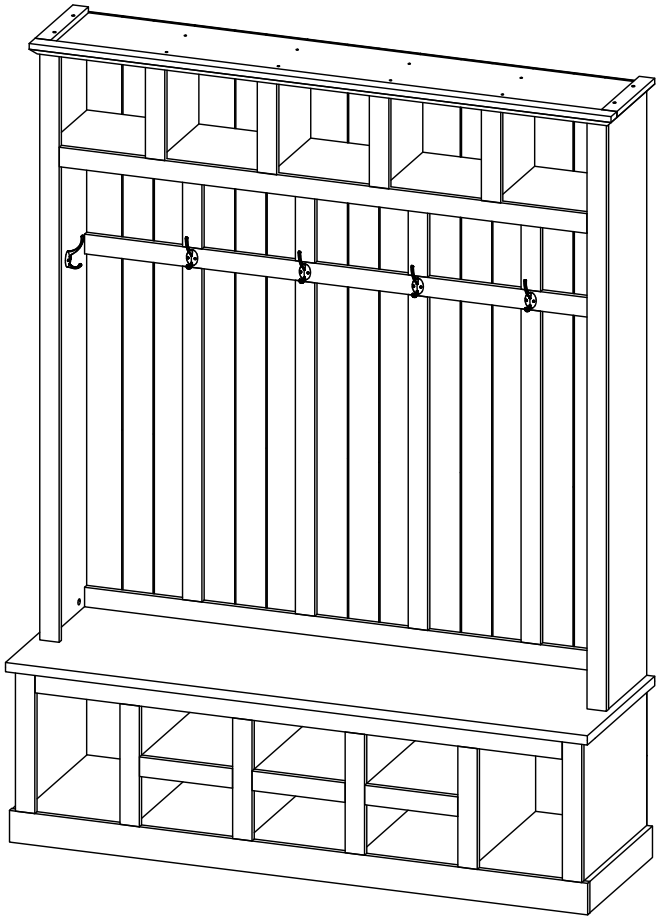

Finish