CHAIR SET ASSEMBLY INSTRUCTION (TOTAL 1 BOX)

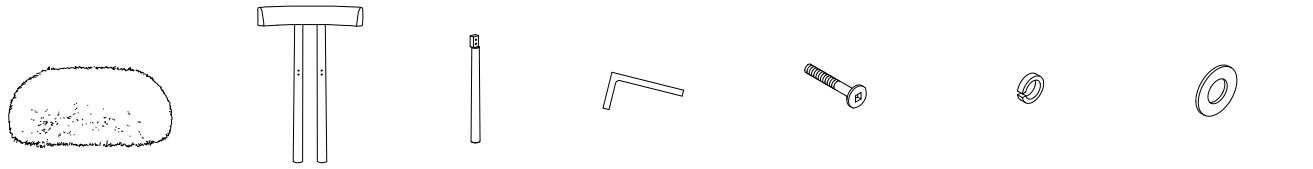

A x 1 pc | B x 1 pc | C x 2 pcs | D x 1 pc (5mm) | E x 8 pcs (M8x60mm) | F x 8 pcs(M8) | G x 8 pcs(M8x22mm)

1

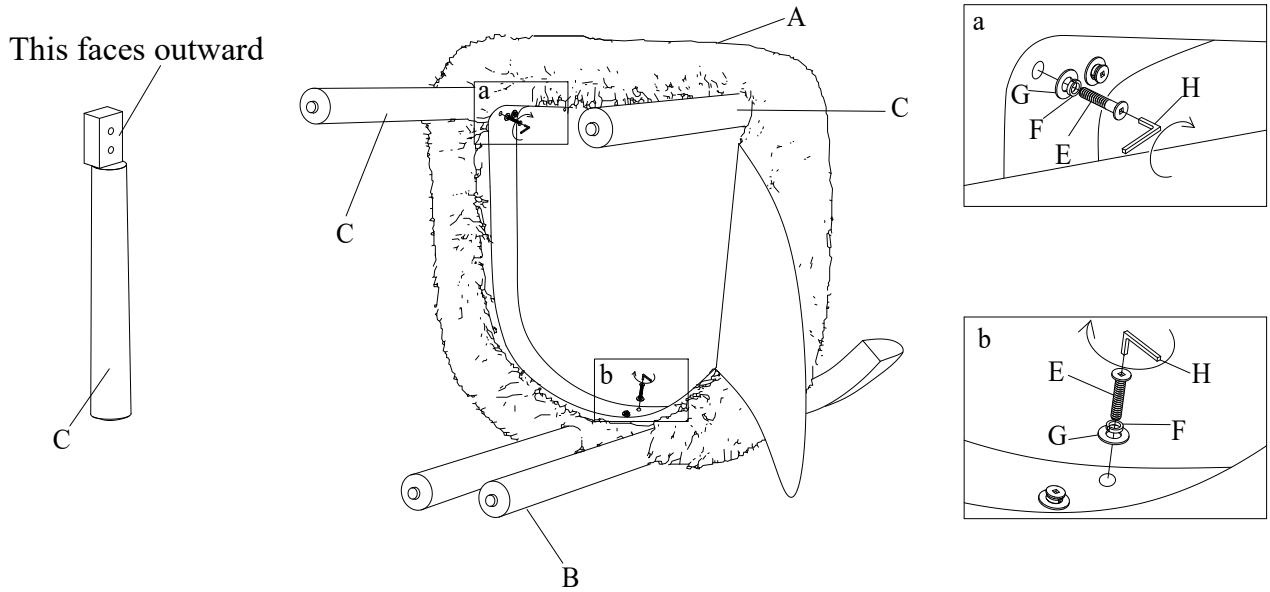

2

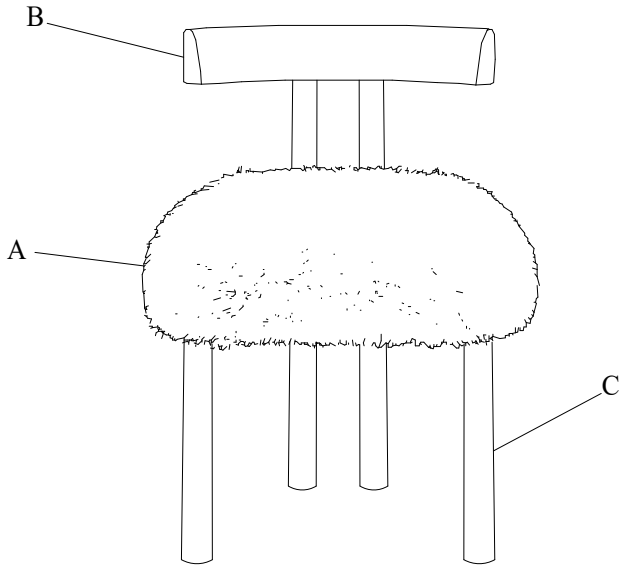

Please make sure all the legs are perpendicular to the ground and bolts loosened before tightening all the bolts.

Thank you for your purchase.