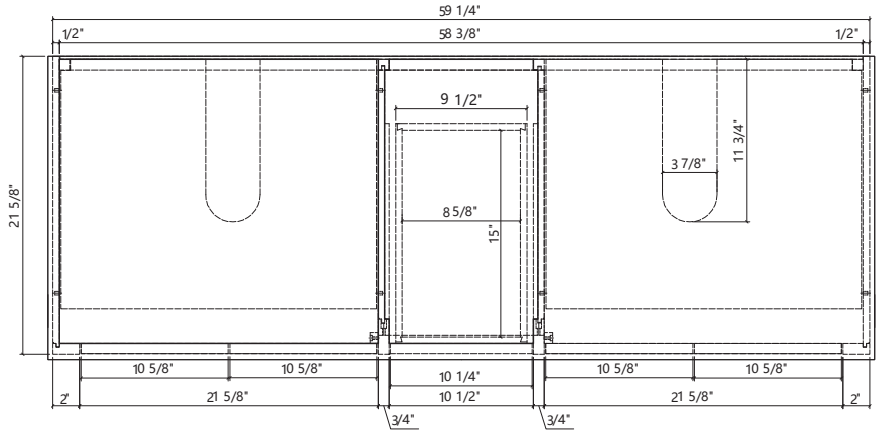
59 1/4"
1/2"
58 3/8"
1/2"
9 1/2"
11 3/4"
3 7/8"
21 5/8"
8 5/8"
15"
10 5/8"
10 5/8"
10 1/4"
10 5/8"
10 5/8"
2"
21 5/8"
10 1/2"
21 5/8"
2"
3/4"
3/4"

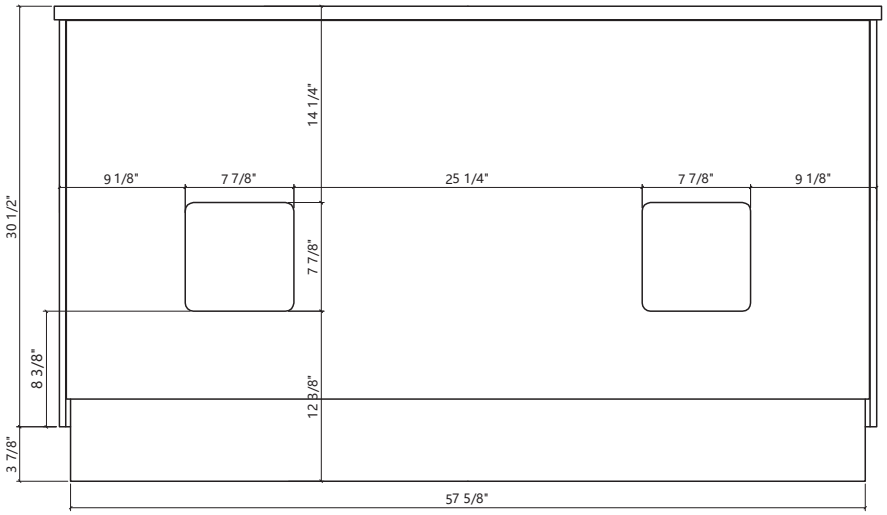
14 1/4"
9 1/8"
7 7/8"
25 1/4"
7 7/8"
9 1/8"
30 1/2"
7 7/8"
8 3/8"
12 3/8"
3 7/8"
57 5/8"

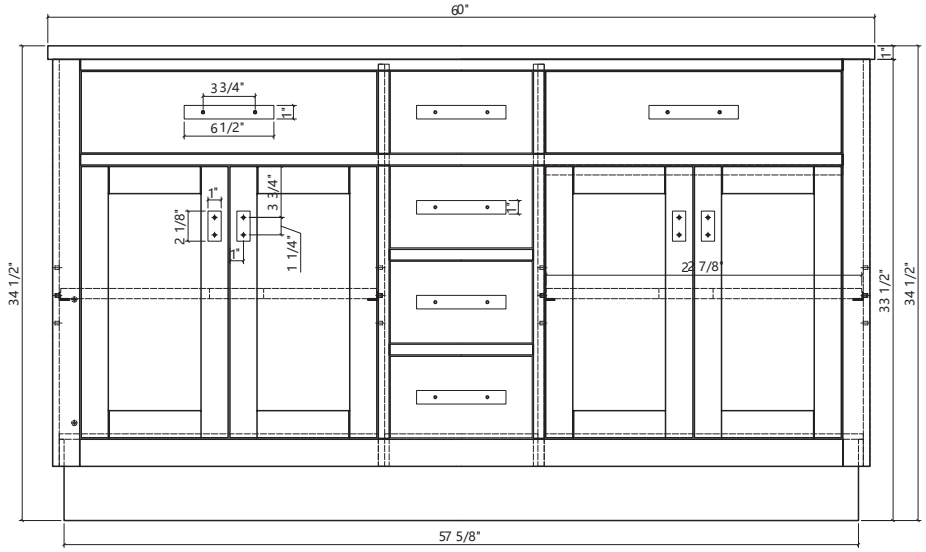
60"
1"
3 3/4"
1"
6 1/2"
1"
3 3/4"
2 1/8"
1"
1 1/4"
22 7/8"
34 1/2"
33 1/2"
34 1/2"
57 5/8"

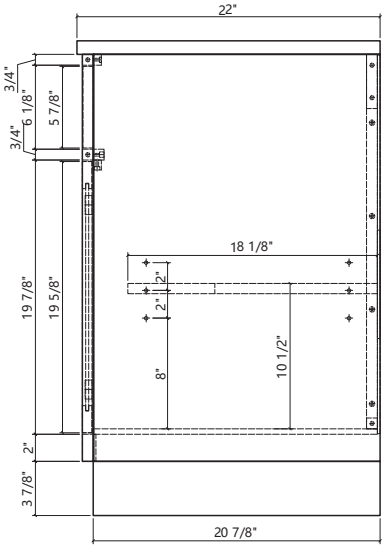
22"
3/4"
6 1/8"
5 7/8"
3/4"
18 1/8"
2"
2"
19 7/8"
19 5/8"
8"
10 1/2"
2"
3 7/8"
20 7/8"

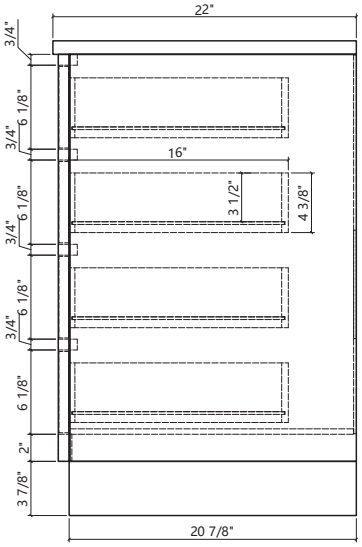
22"
3/4"
6 1/8"
3/4"
16"
3 1/2"
4 3/8"
6 1/8"
3/4"
6 1/8"
3/4"
6 1/8"
2"
3 7/8"
20 7/8"

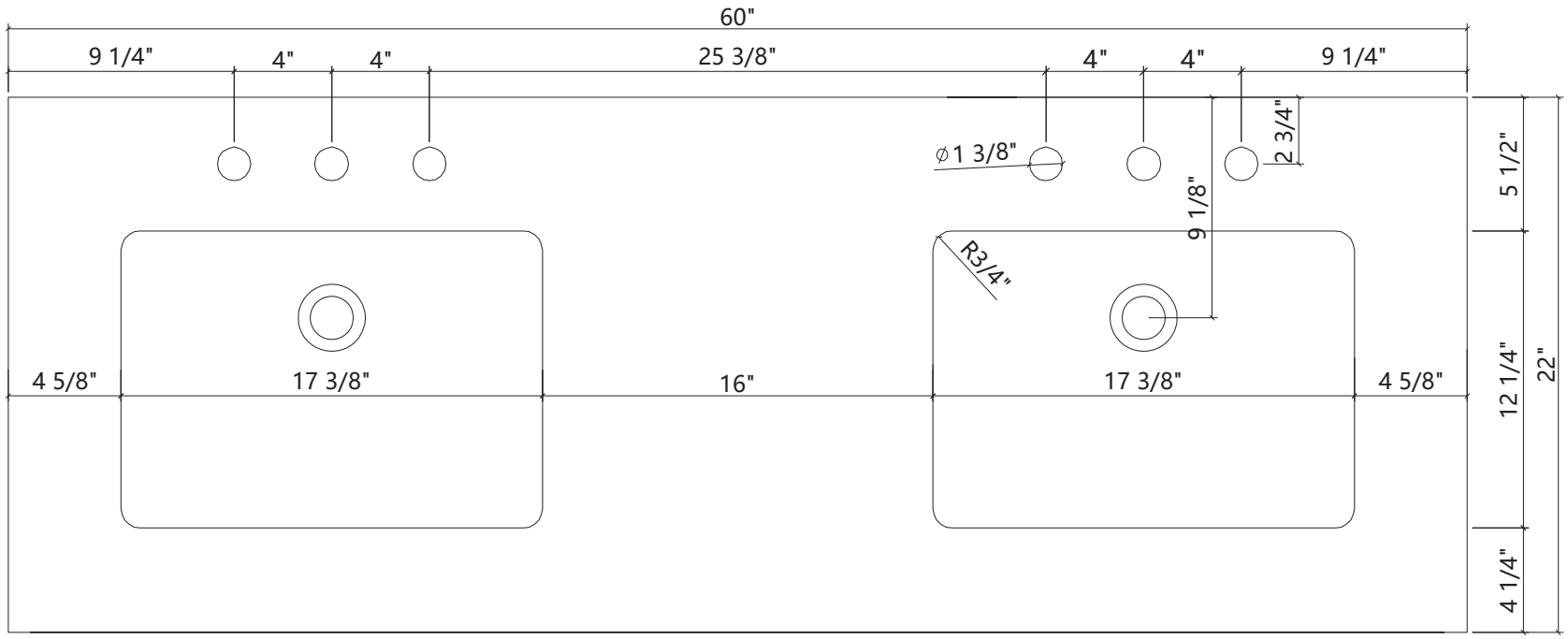
60"
9 1/4"
4"
4"
25 3/8"
4"
4"
9 1/4"
⌀1 3/8"
2 3/4"
9 1/8"
R3/4"
5 1/2"
12 1/4"
22"
4 1/4"
4 5/8"
17 3/8"
16"
17 3/8"
4 5/8"

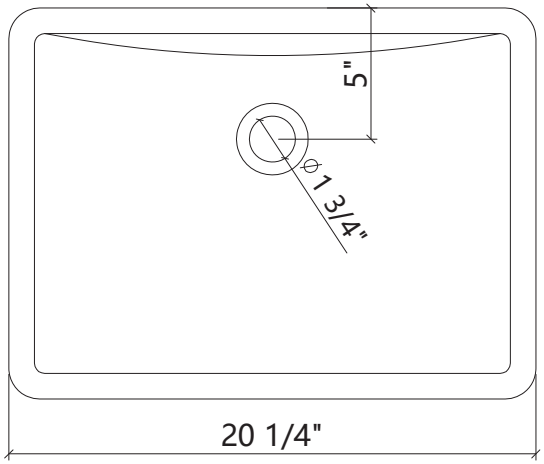
5"
ϕ 1 3/4"
20 1/4"

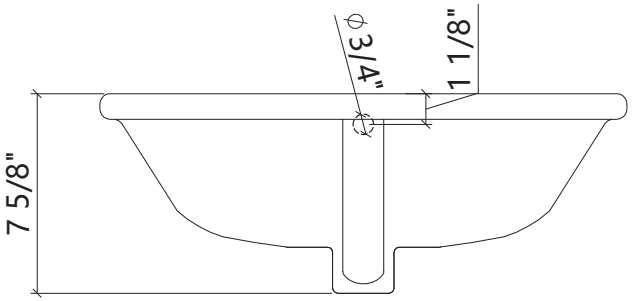
ϕ 3/4"
1 1/8"
7 5/8"

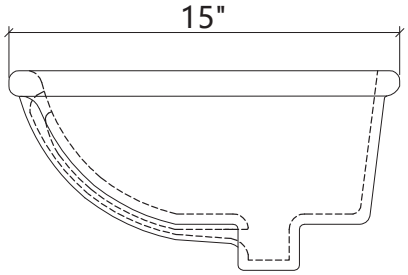
15"

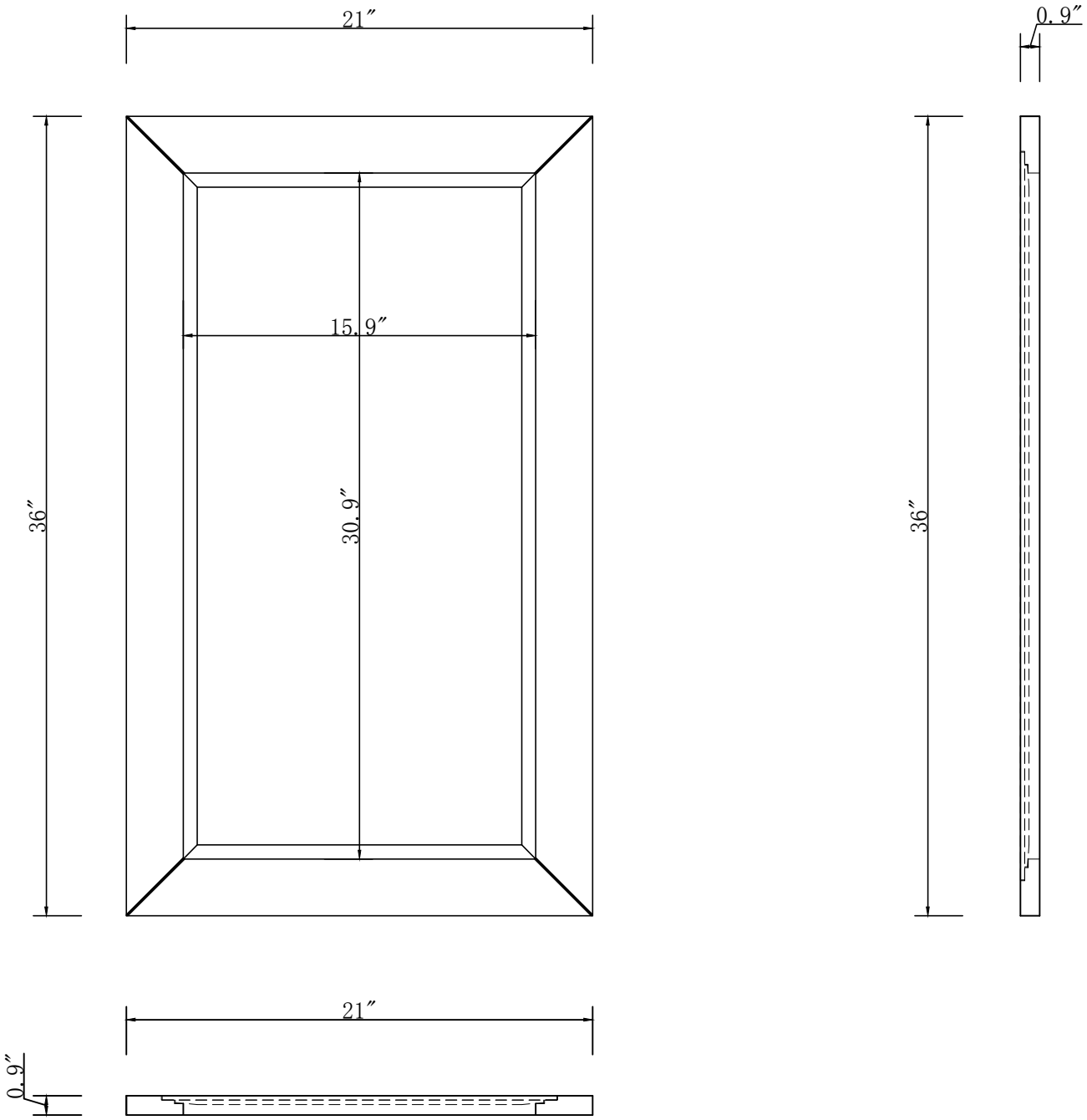
21″
15.9″
36″
30.9″
21″
0.9″
0.9″
36″

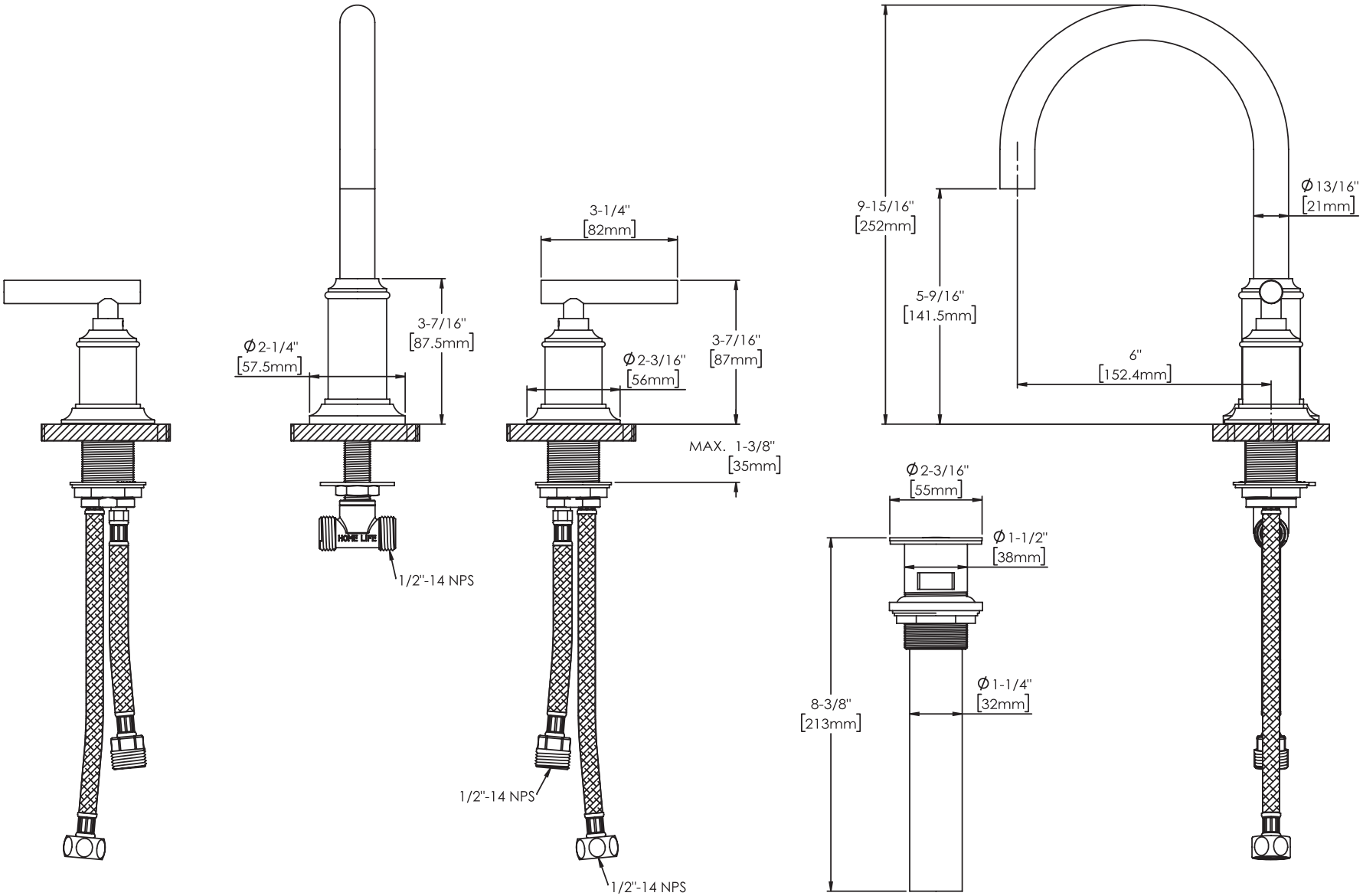
3-7/16"
[87.5mm]
Ø2-1/4"
[57.5mm]
HOME LIFE
1/2"-14 NPS
3-1/4"
[82mm]
3-7/16"
[87mm]
Ø2-3/16"
[56mm]
MAX. 1-3/8"
[35mm]
1/2"-14 NPS
1/2"-14 NPS
9-15/16"
[252mm]
5-9/16"
[141.5mm]
6"
[152.4mm]
Ø13/16"
[21mm]
Ø2-3/16"
[55mm]
Ø1-1/2"
[38mm]
Ø1-1/4"
[32mm]
8-3/8"
[213mm]

2024-12-19