# ASSEMBLY INSTRUCTION



## QUEEN BED

(13 PCS LVL SLATS)

Read this instruction carefully. See hardware and furniture part list for guidance. Be sure all part is complete, before you assemble. Place all wooden furniture part on a clean and flat soft surface to prevent from being scratched. Follow the figure to start assembling.

CAUTION:
1. Do not FULLY-TIGHTEN the nut or bolt untill all nut or nut bolt is ready to assembled.
2. Do not OVER-TIGHTEN the nut or nut bolt to avoid causing damages to the thread.
3. Keep all hardware part out of reach of children.

### PART LIST

| NO | DESCRIPTION | QTY |
|---|---|---|
| 1 | HEADBOARD | 1 PC |
| 2 | FOOTBOARD | 1 PC |
| 3 | SIDE RAIL | 2 PCS |
| 4 | CENTER RAIL | 1 PC |
| 5 | SUPPORT LEG | 3 PCS |
| 6 | SLAT | 13 PCS |
| 7 | BED LEG | 4 PCS |
| 8 | BED LEG SUPPORT PANEL | 4 PCS |

### HARDWARE LIST

| NO | DESCRIPTION | QTY |
|---|---|---|
| A | JCBB M8 X 30MM | 4PCS |
| B | JCBB M8 X 40MM | 8PCS |
| C | JCBC M6 X 50MM | 22PCS |
| D | SPRING WASHER 5/16" | 34PCS |
| E | FLAT WASHER 5/16" | 28PCS |
| F | FLAT WASHER 1/4" | 6PCS |
| G | CSK M4 X 16MM | 16PCS |
| H | CSK M4 X 30MM | 33PCS |
| I | CSK M4 X 38MM | 16PCS |
| J | ALLEN KEY M4 | 1PC |
| K | ALLEN KEY M5 | 1PC |

## STEP 1

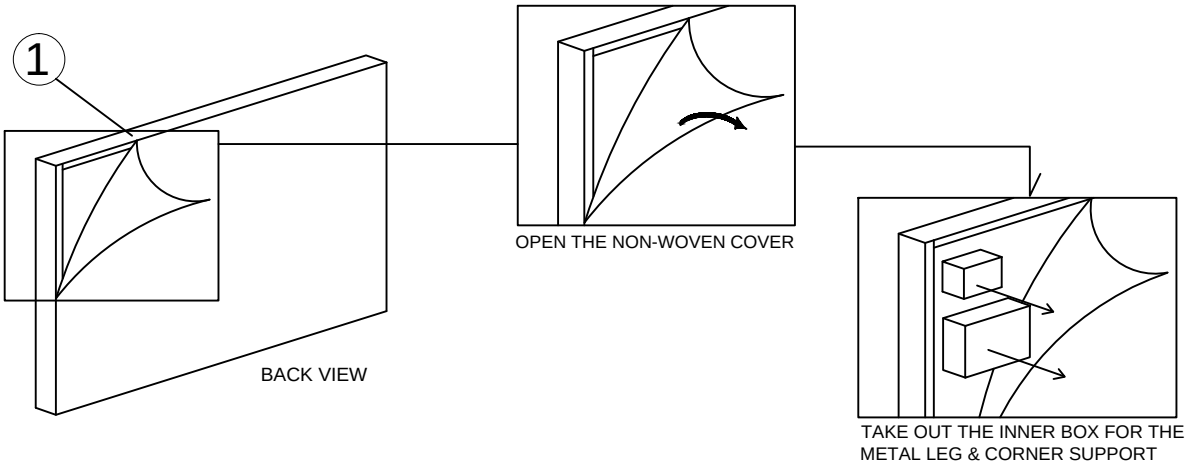


## STEP 2

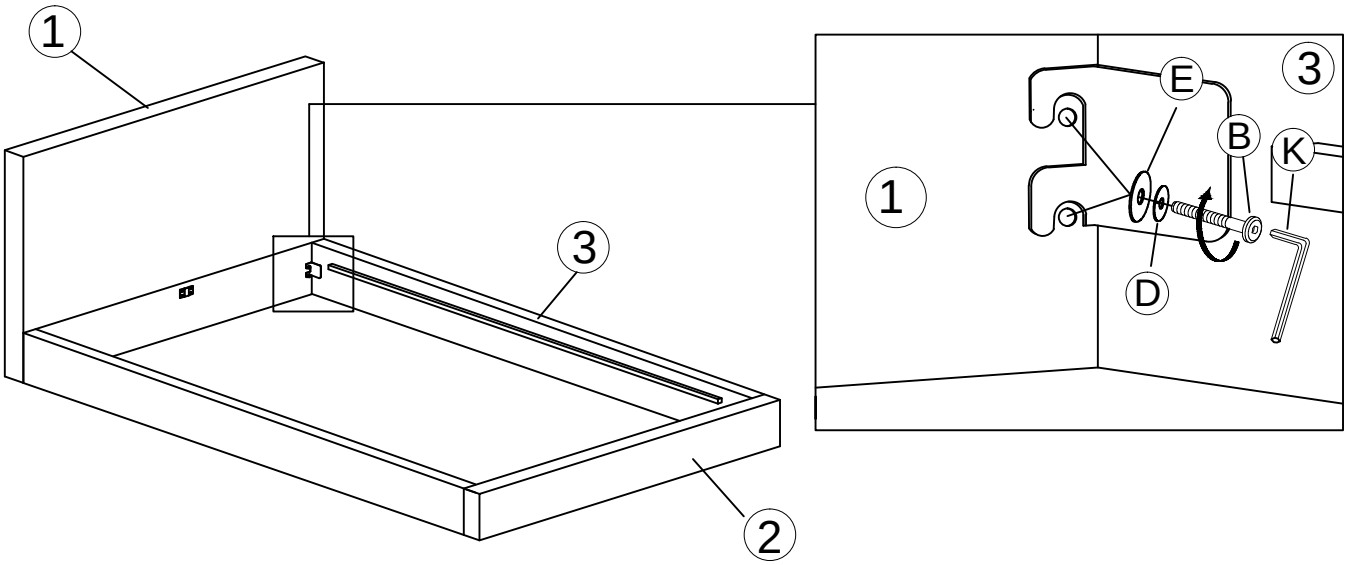

STEP 3

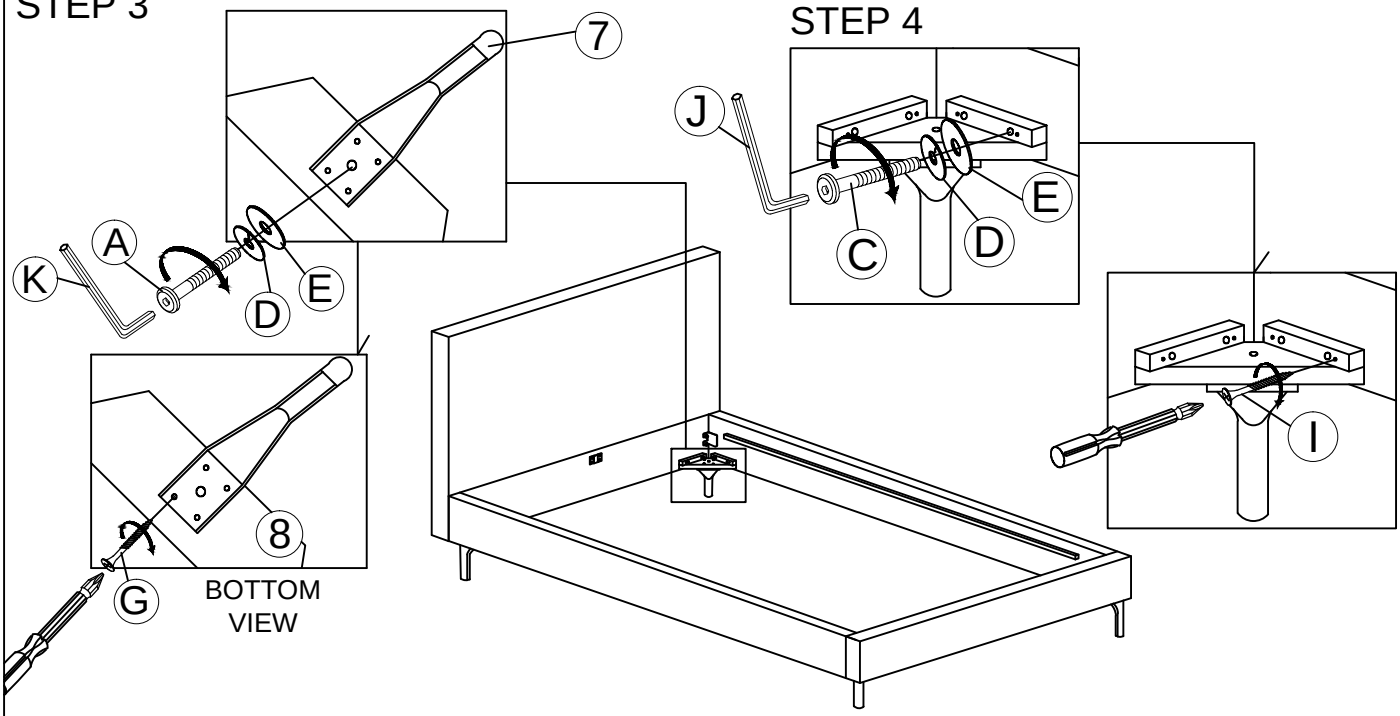


STEP 4




STEP 5

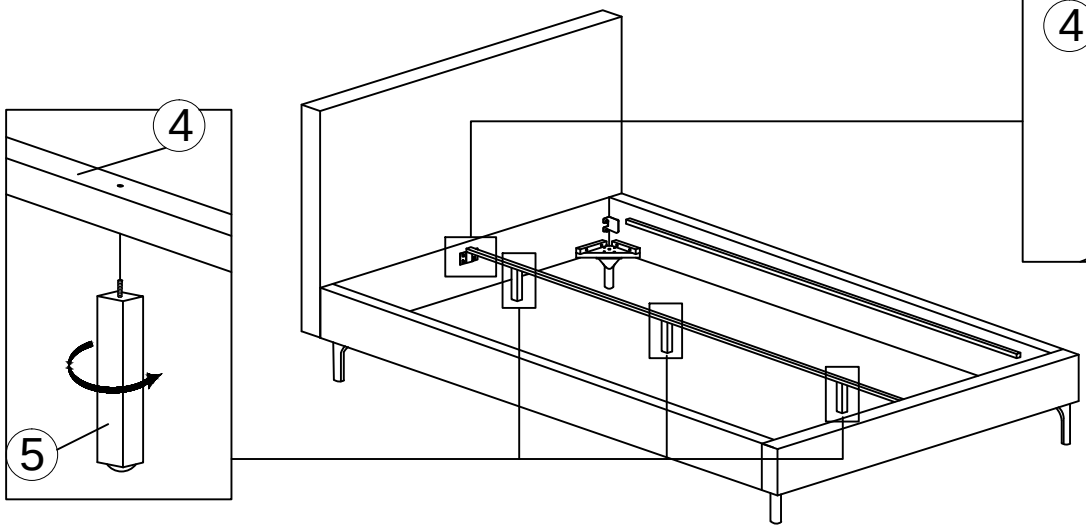


STEP 6

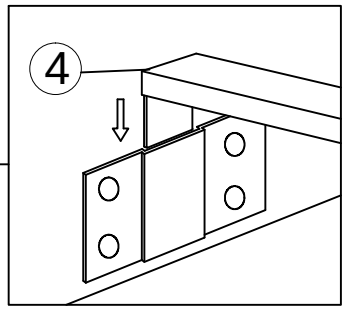


STEP 7

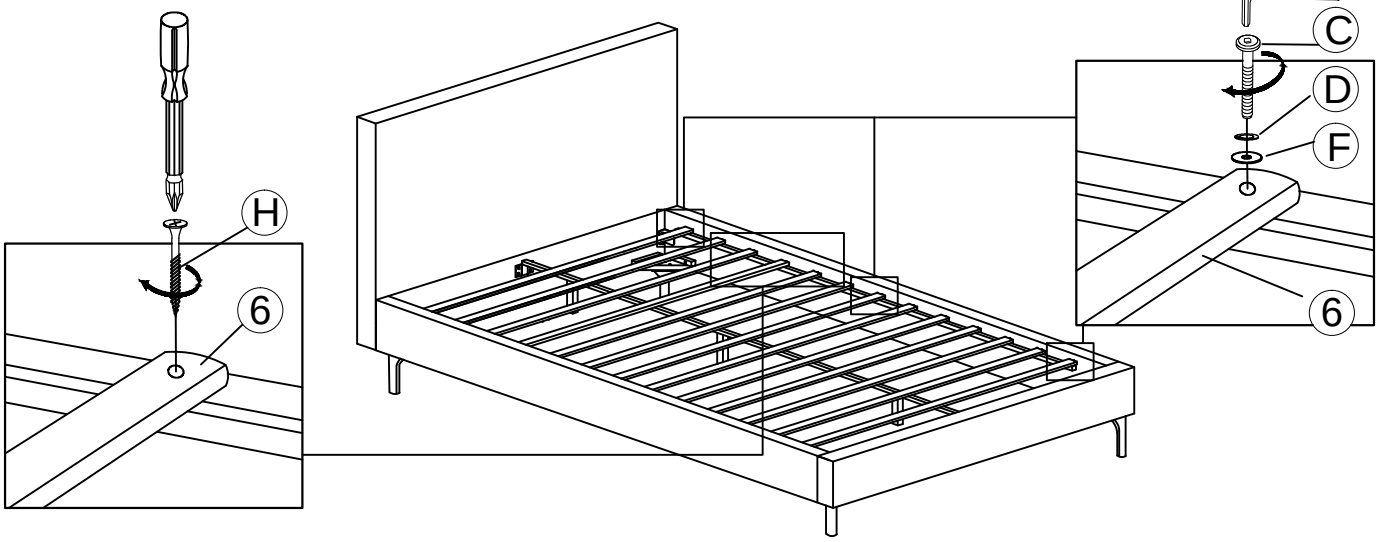
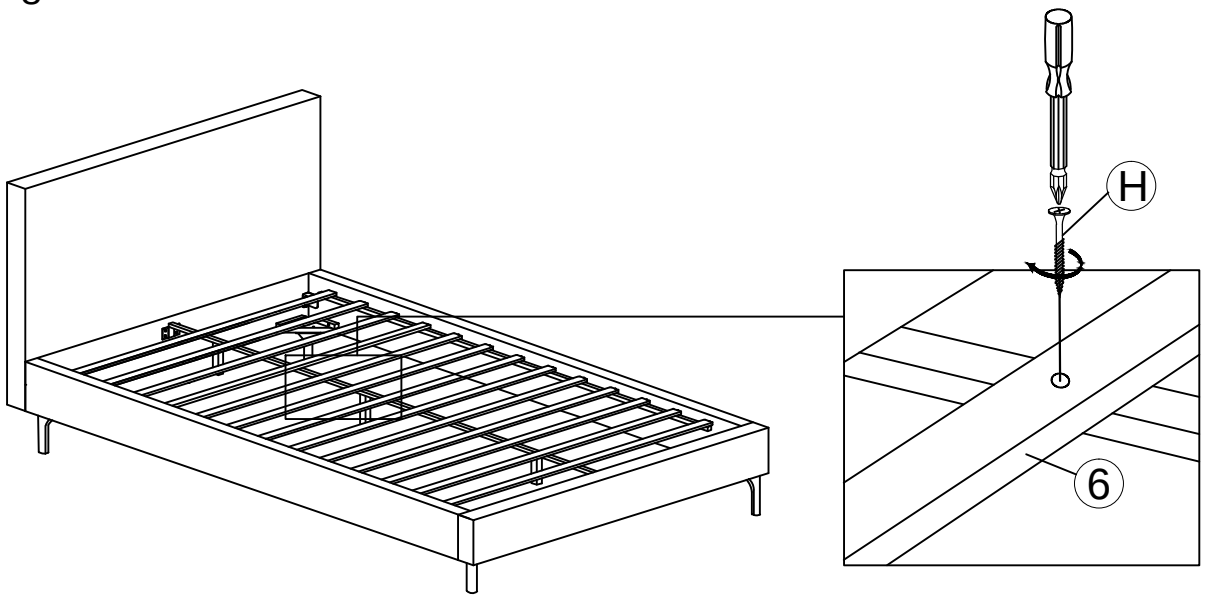
STEP 8