# Assembly Instructions

9115794 TV Stand - Light Oak
9115797 TV Stand - Sorrento Brown

**Product Issues? Please Call Us Before Contacting Your Retailer At 1-800-549-3300.**
**Email customerservice@mshome.co, or visit www.mshome.co**
**We can help with Assembly Issues, Part Requests, Damages, & All Other Product Related Questions**

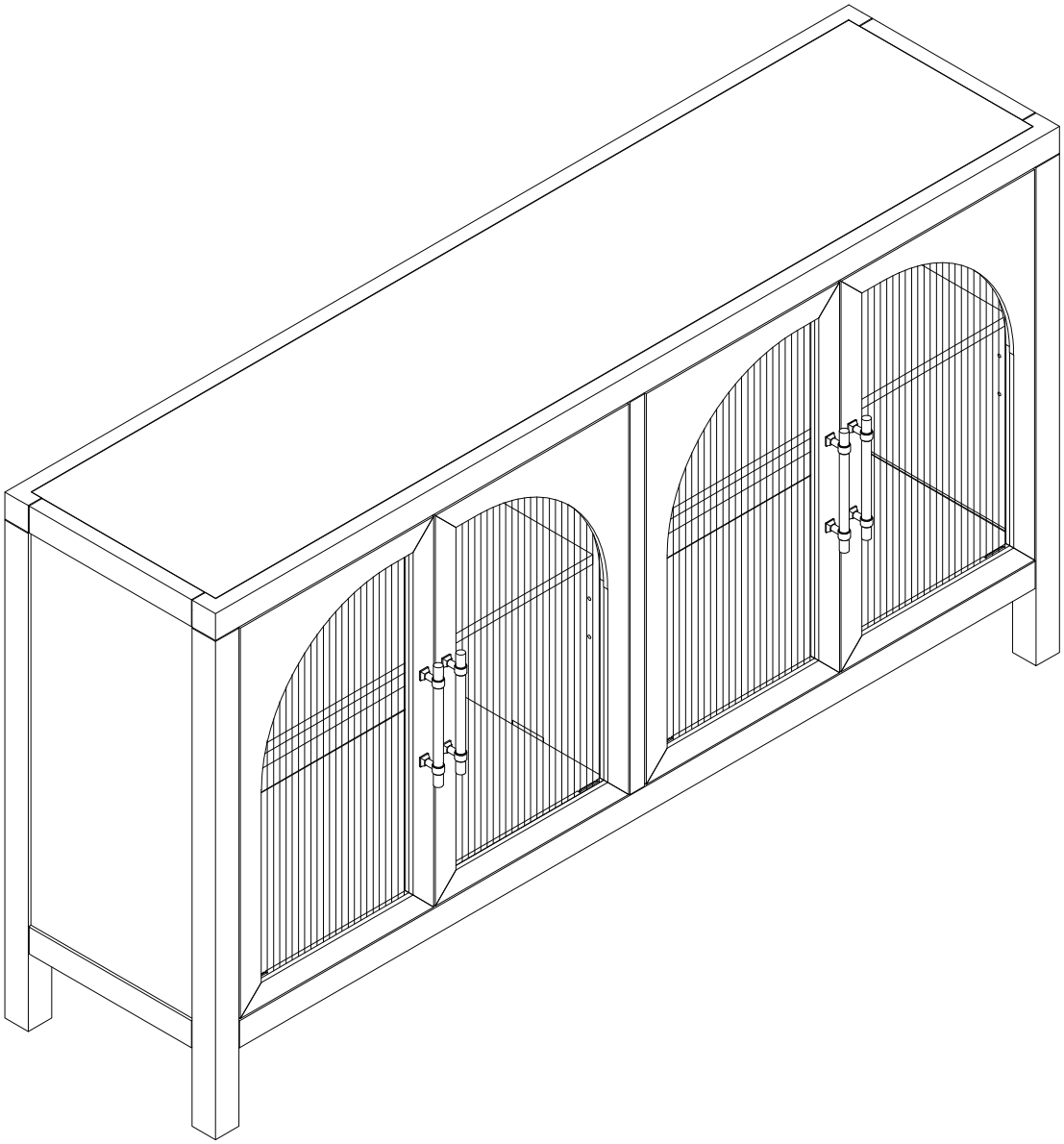

MSH - USA

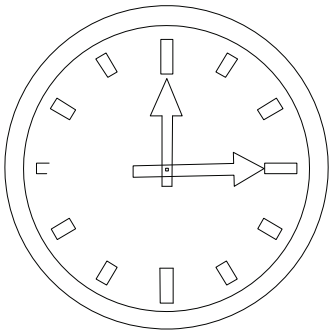

15 min

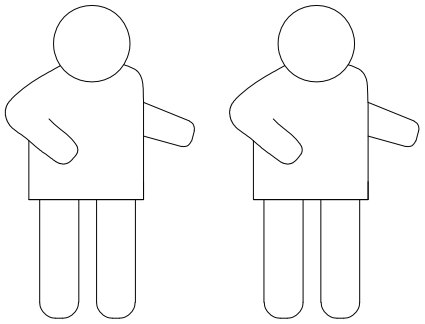

Two People Required
for Assembly

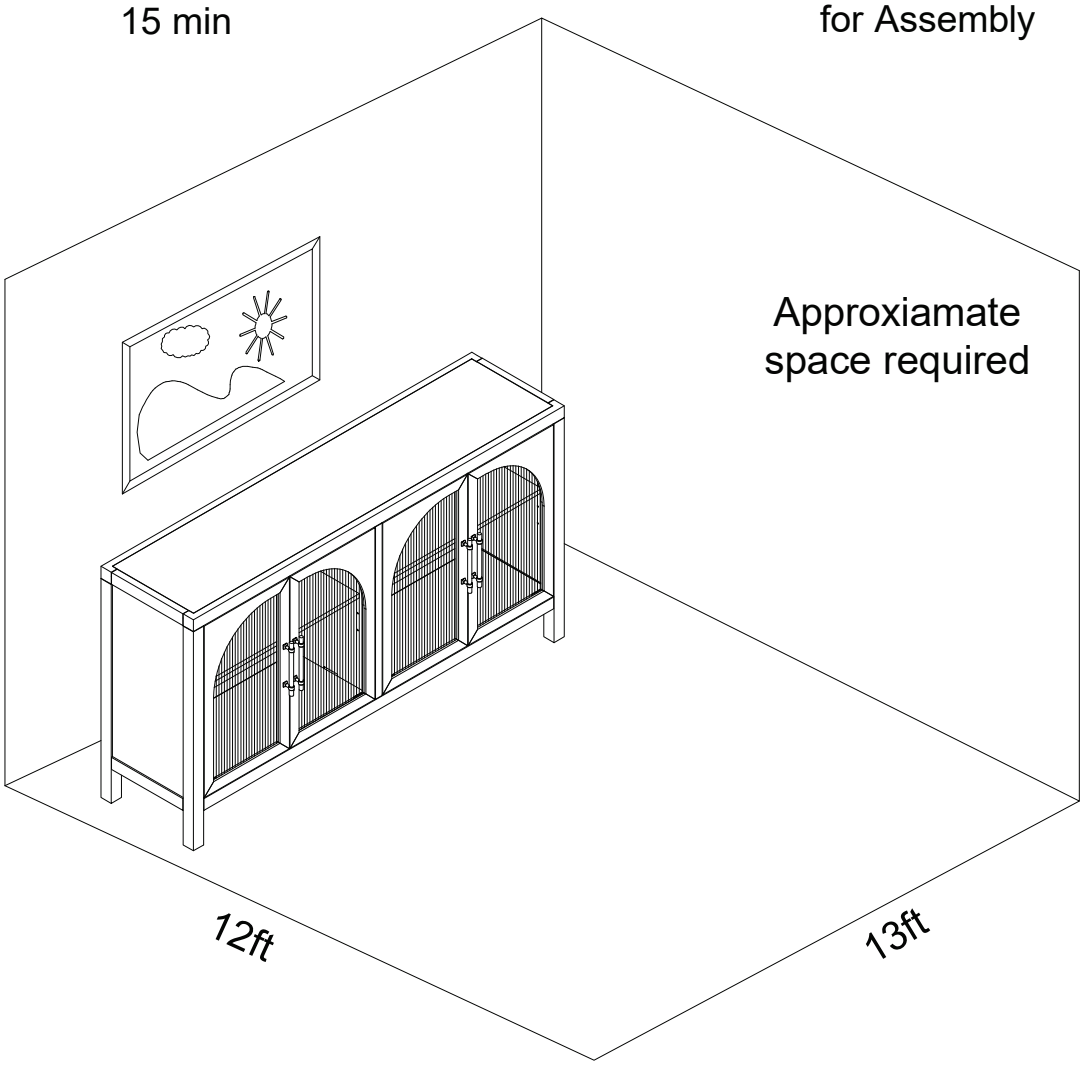


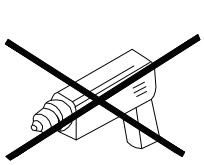

Do Not Use Power Tools

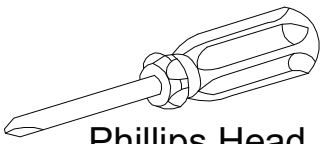

Phillips Head
Not Provided

**PARTS INCLUDED:** 9115794/ 9115797

- (C1) Top Panel x 1
- (C2) Side Panel x2
- (C3) Front Frame x1
- (C4) Partition Panel x 1
- (C5) Bottom Panel x 2
- (C6) Shelf Panel x 2
- (C7) Back Panel x 1
- (C8) Support Leg x 1

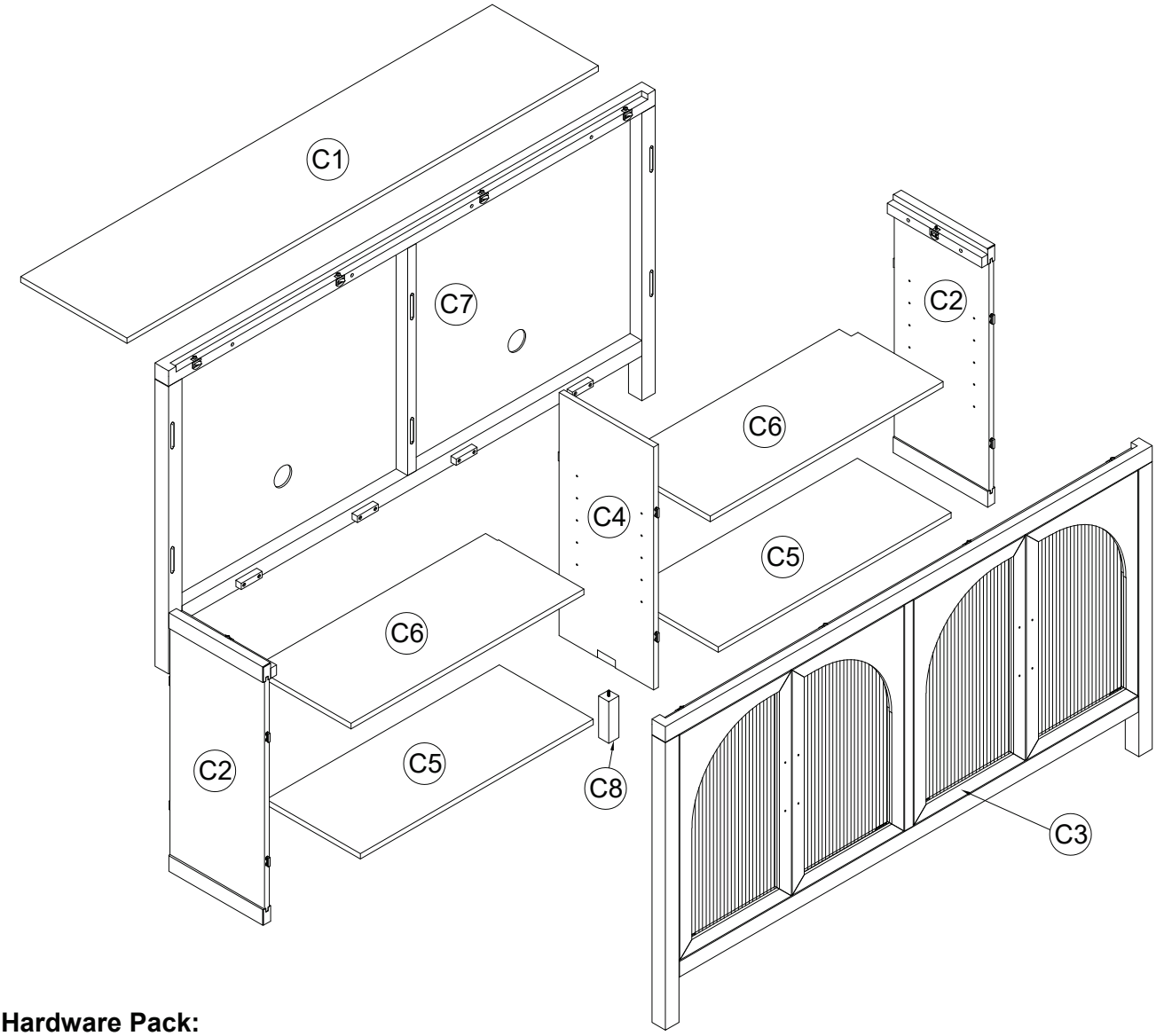


**Hardware Pack:**

| A | B | C | D | |
|---|---|---|---|---|
|  |  | 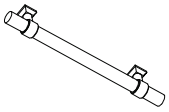 | 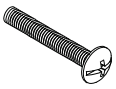 | 2sets  |
| 8pcs | Ø3.5x15 (mm) 8pcs | 4pcs | Ø4x30 (mm) 8pcs | **ANTI-TIP SET** |

1

- Please lay all components on smooth flat surface to prevent scratches.
- Use the EPE foam to protect the plastic hardware before assembly.

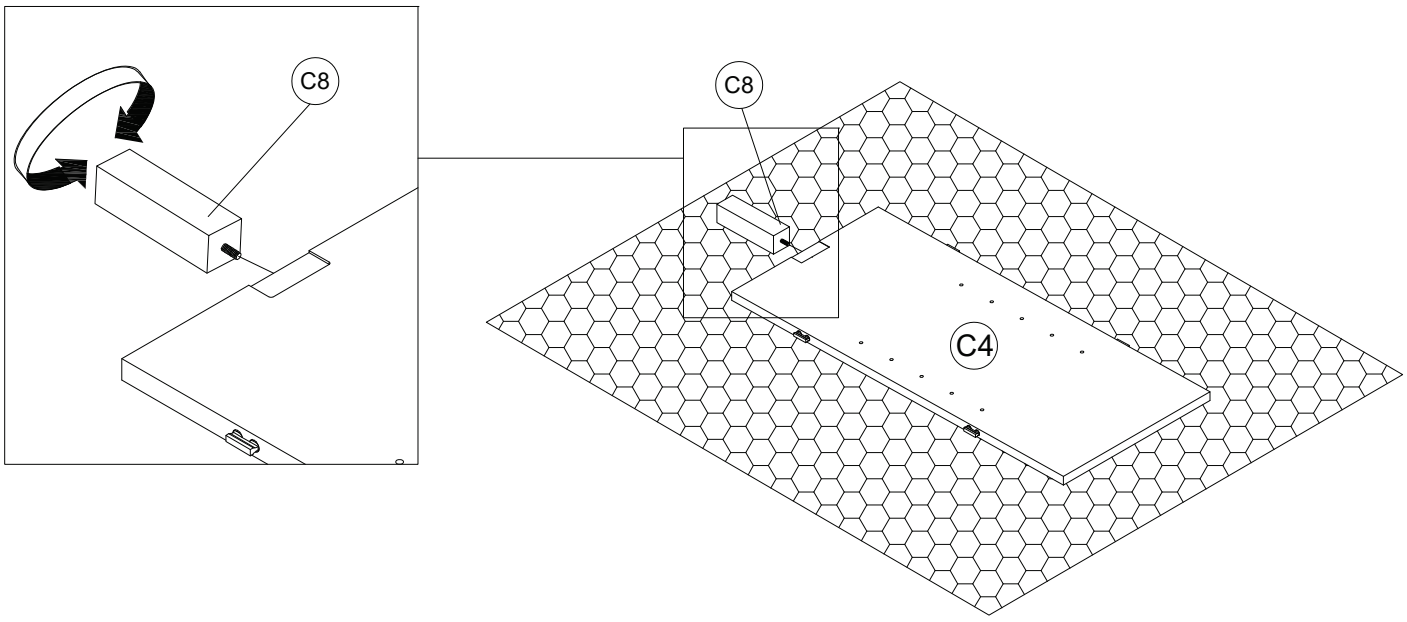


2

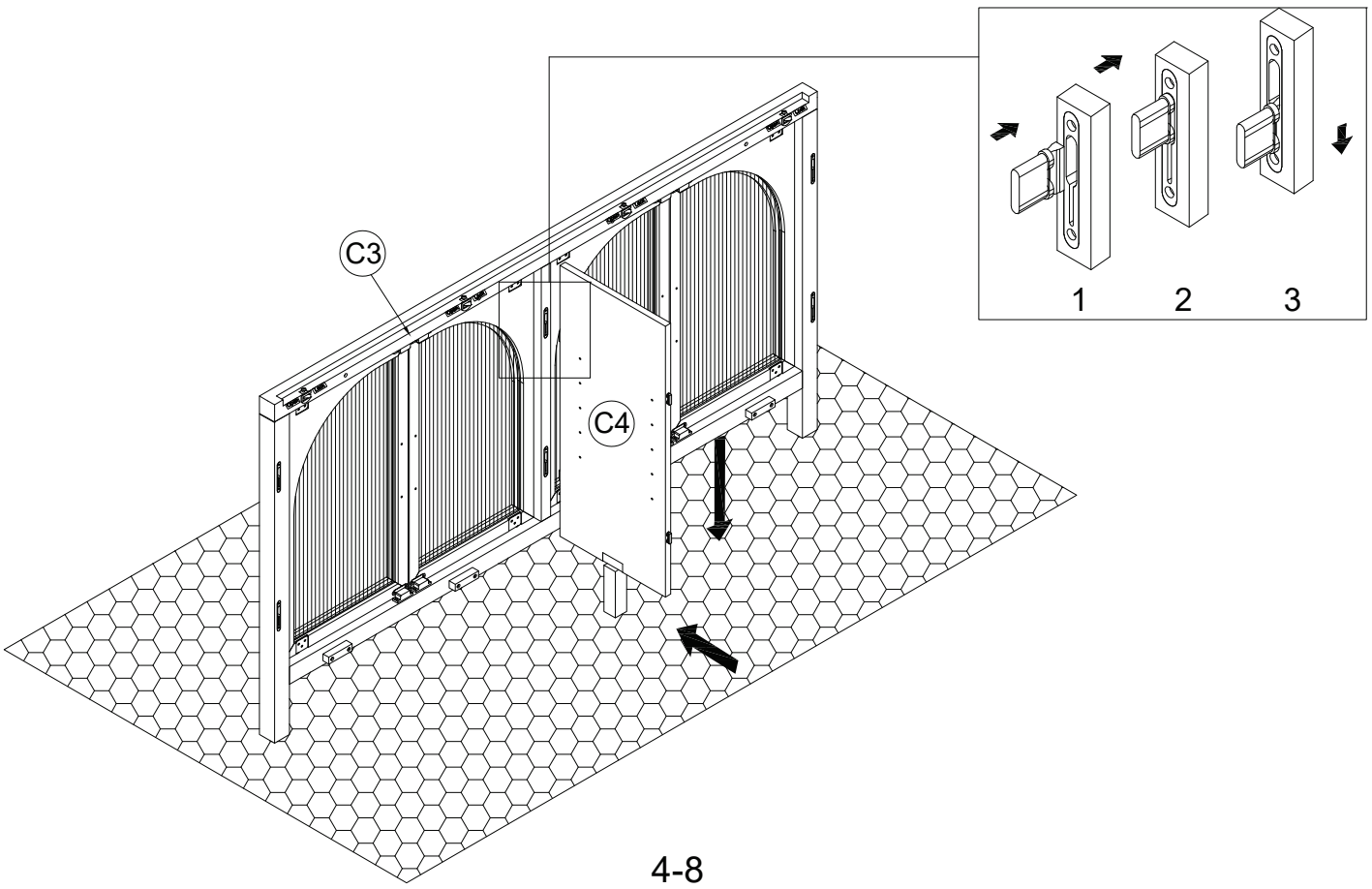

3

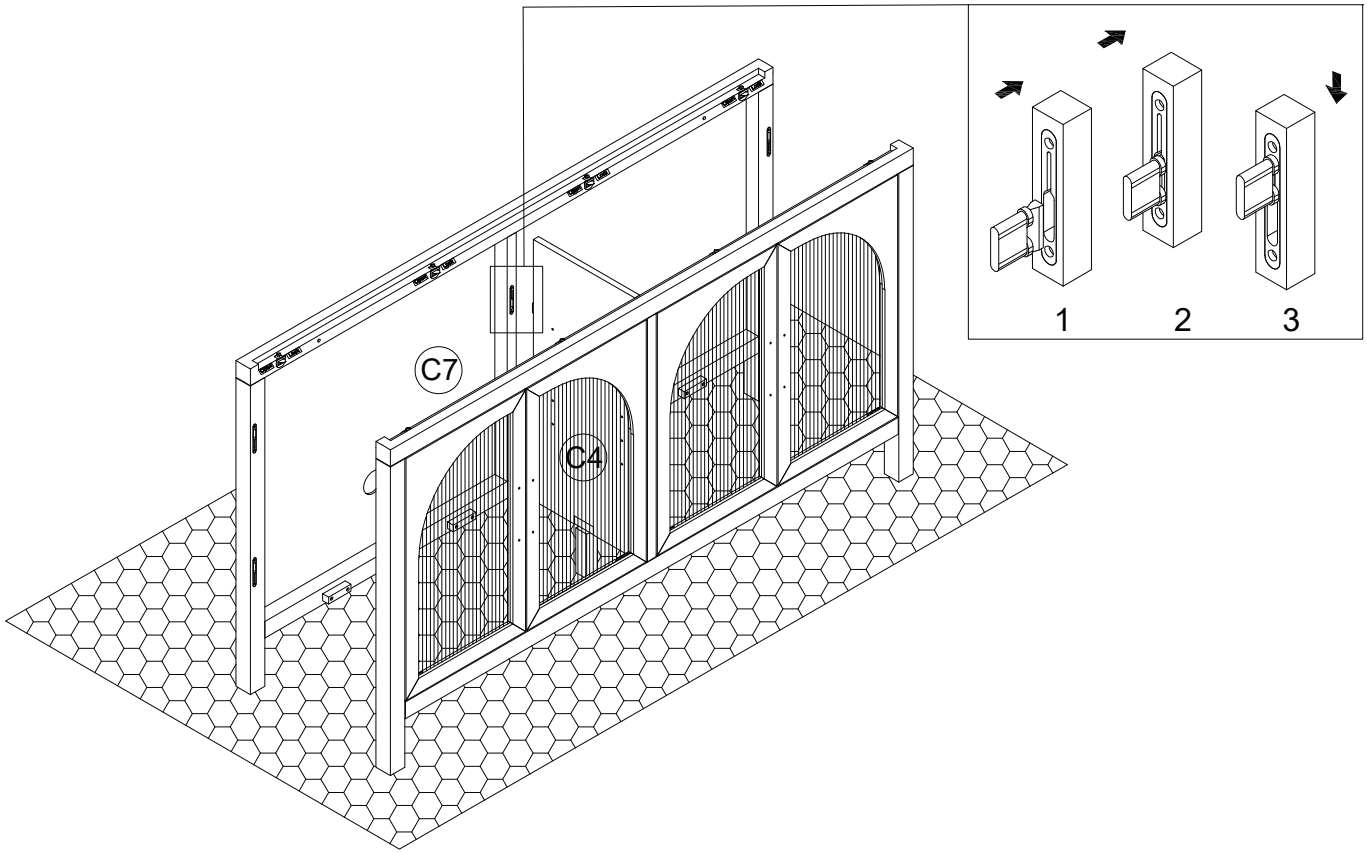


4

! Please match the corresponding numbers up to lock into place

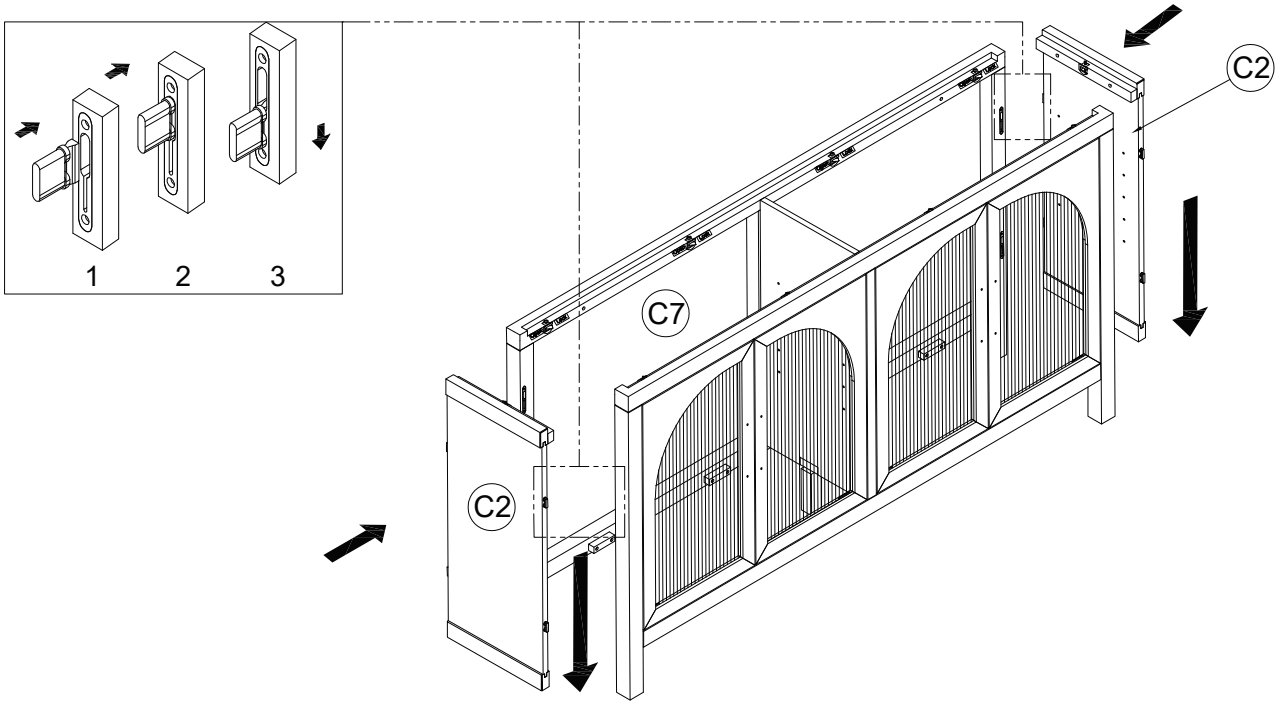


- INSERT both "Side Panels C2" into the assembly tracks of "Front Frame C3" and "Back Panel C7". Make sure all panels are in the correct position.
- Kindly PULL DOWN on the "Side Panels C2" to lock all components in place.

5

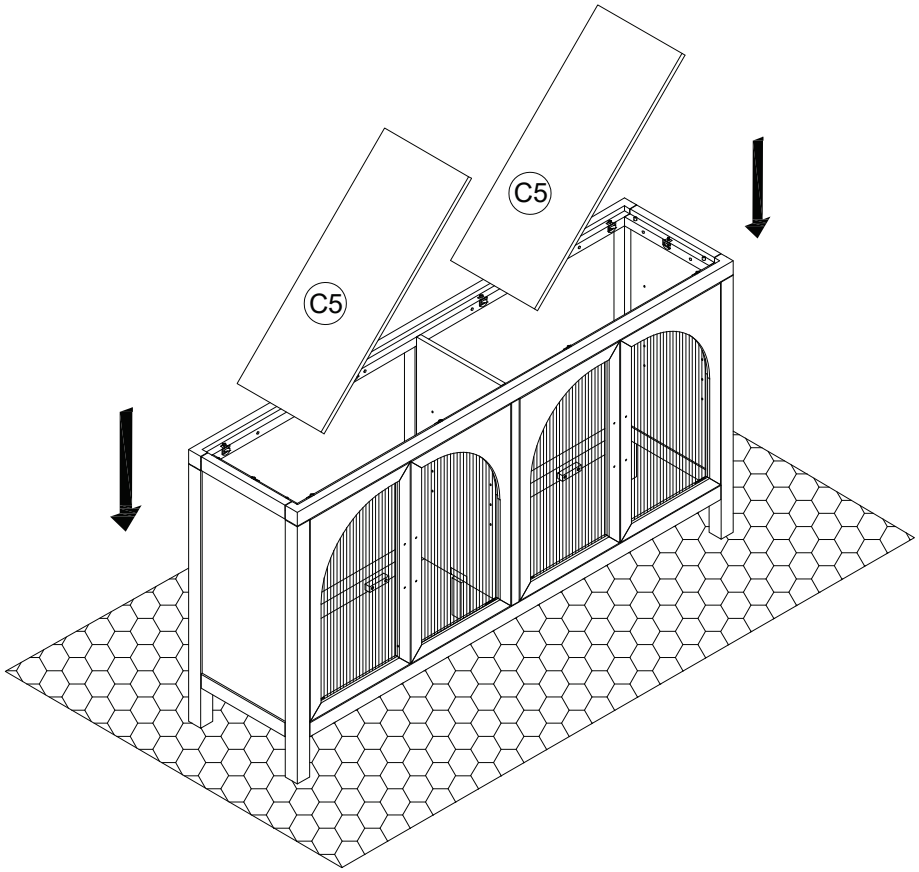


6

| | | | |
|---|---|---|---|
| A x 8 |  | B x 8  | Ø3.5x15 (mm) |

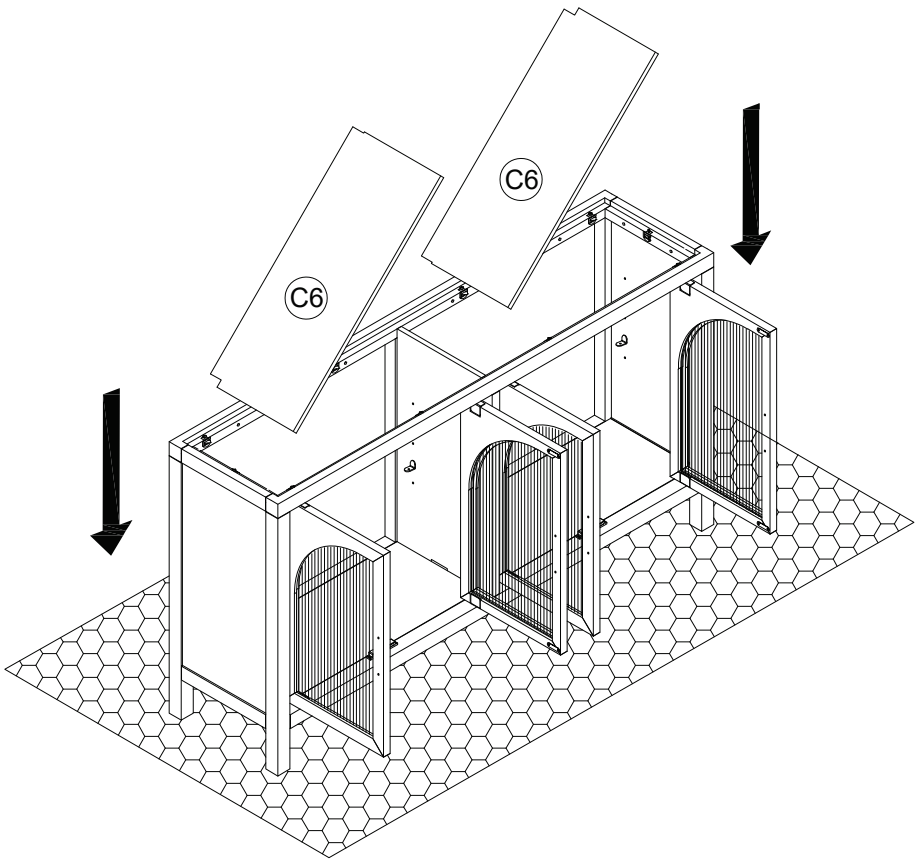


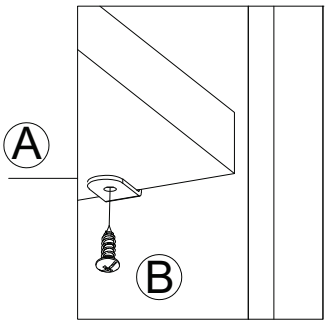

7

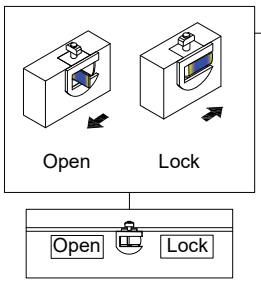


Make sure all latches are in the open position before installing Top Panel (C1)

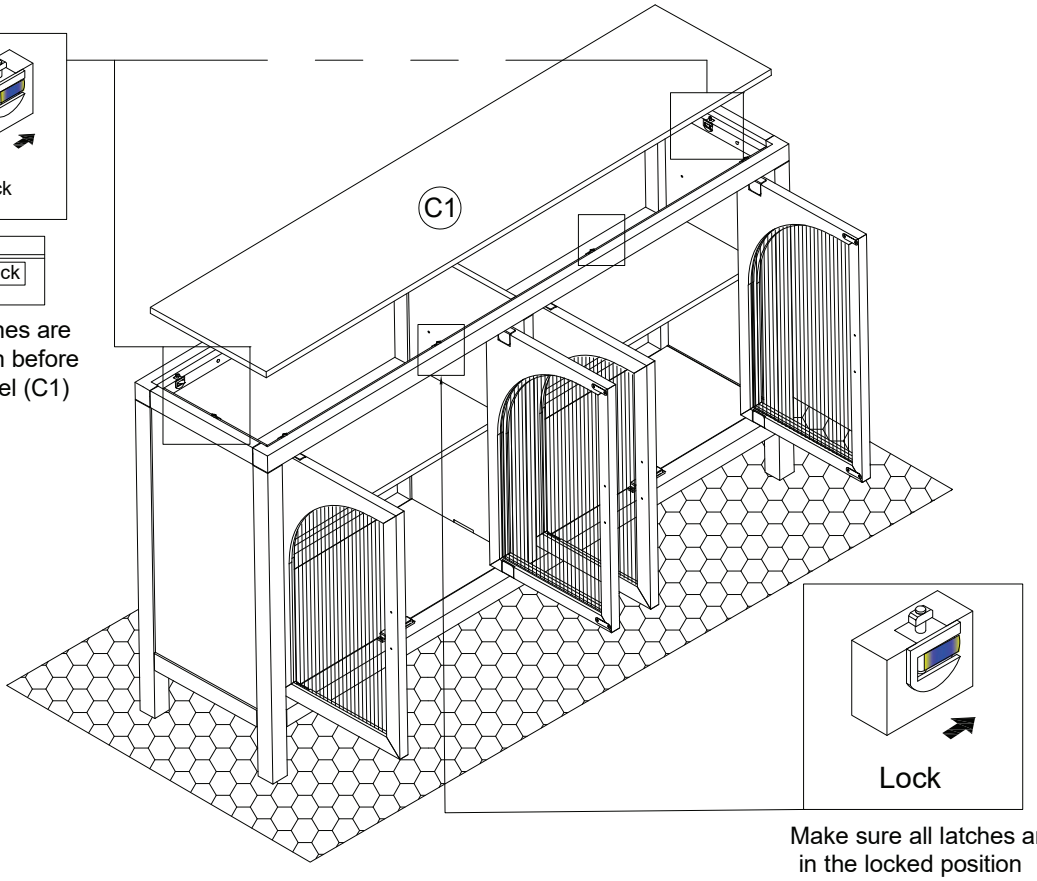


Make sure all latches are in the locked position

8

| | | | |
|---|---|---|---|
| C x 4 | 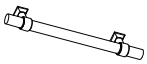 | D x 8 |  Ø4x30 (mm) |

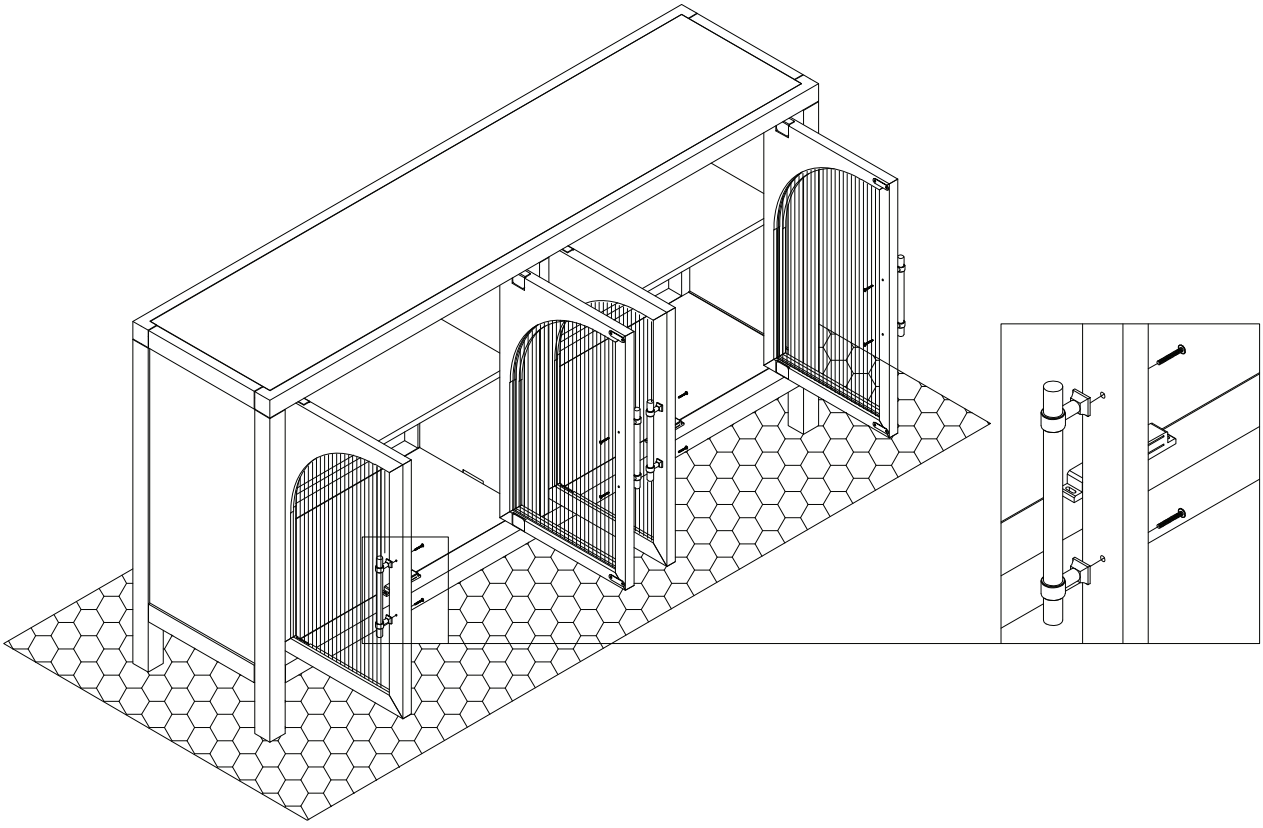

9

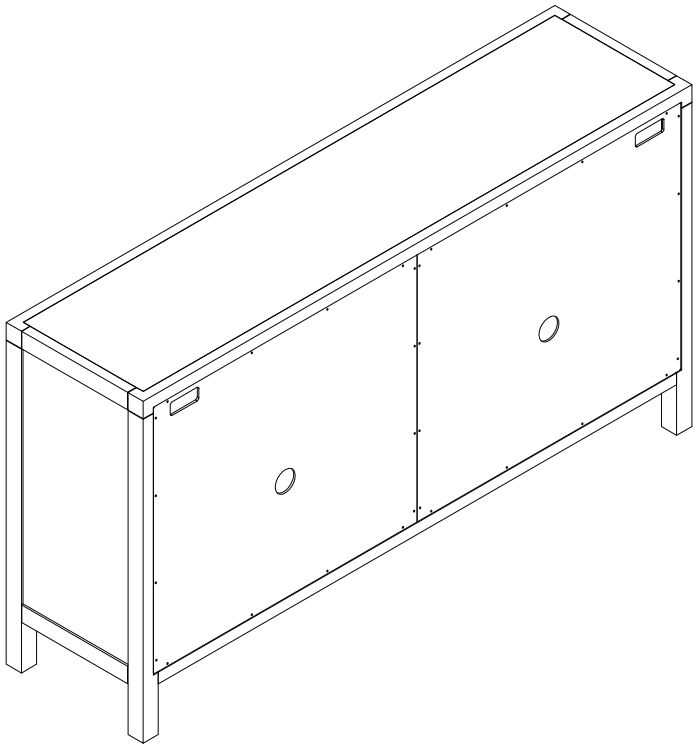

2 Step

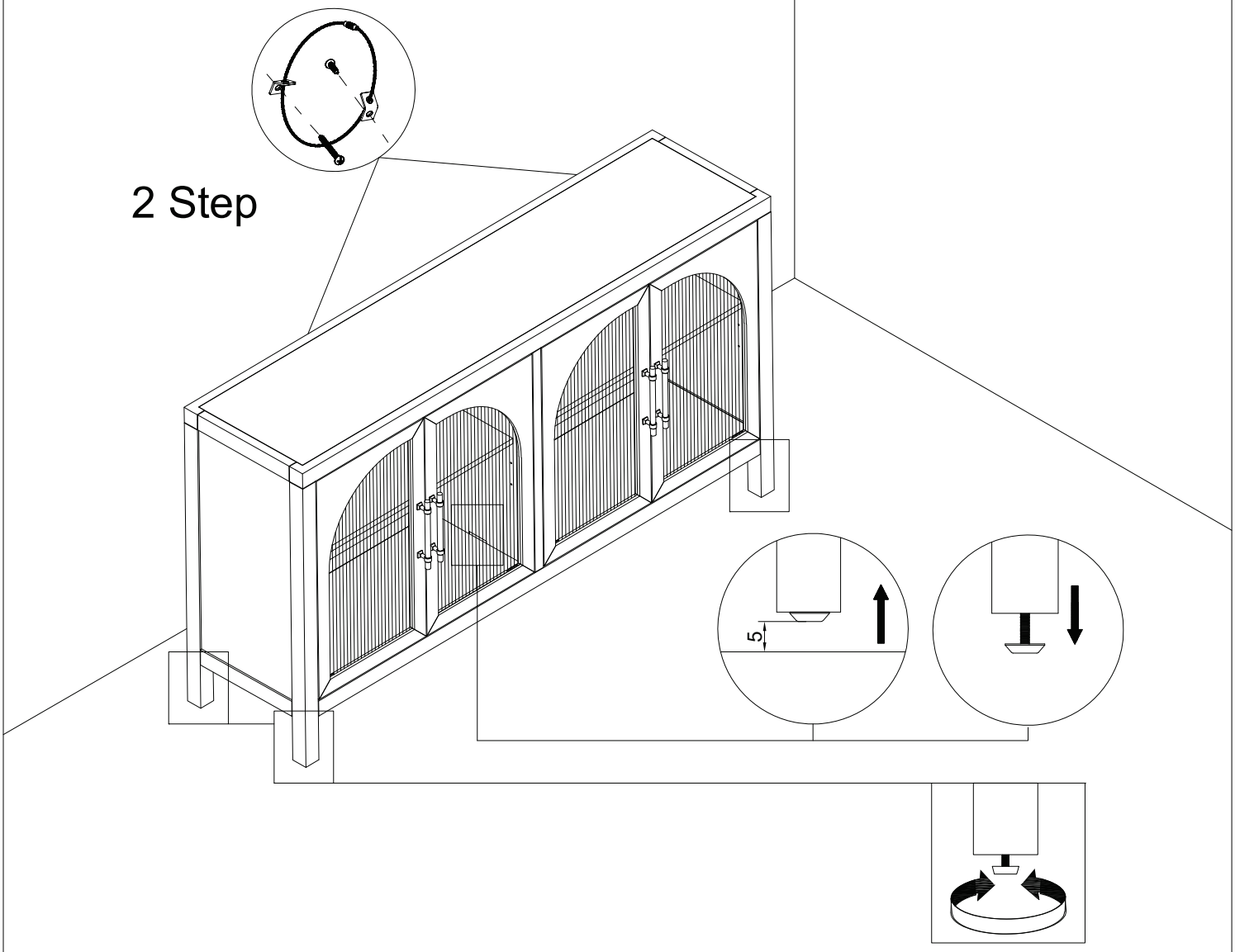


Adjustable floor leveler

# Replacement Part Form

Have an issue?  Need a replacement part?

Please E-mail us before contacting your retailer, we will be happy to fix your issue.

This process will be hassle free! We will replace your part for free!

Please follow these easy steps below.

**You will need to E-mail *Martin Svensson Home* Customer Service: Customerservice@mshome.co (Please note it is .CO not .com)**

**Please scan or take a picture of this form filled out.**

1. **Customer Name:** _____
2. **SKU# with issue:** _____
3. **Replacement Part # needed**_____
   *Please reference the Assembly Instructions to identify needed part #'s
4. **Photos of the Damaged Part** (please include in the e-mail)
5. **Brief description of the part issue:** _____
6. **Proof of Purchase** (please provide a copy of your purchase receipt)
7. **Ship to Address:** _____
   _____
   _____
8. **Other contact information:**
   **Email Address**_____
   **Phone #** _____

*If possible, could you please provide the UPS or FedEx tracking from original shipment_____

*If possible, could you please provide the P.O. # - information found on back/underneath product _____

*If you have any other question, we are happy to assist with assembly questions or all other parts related questions.  Thank you for your purchase!