ASSEMBLY INSTRUCTION

WALL CABINET

Estimated Assembly Time: 30 - 40 minutes
2-person assembly recommended

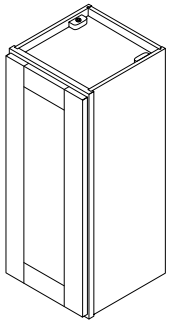

TOOLS REQUIRED

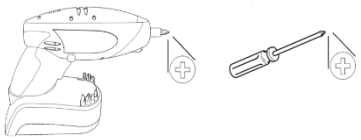

PART	DESCRIPTION	QTY	PART	DESCRIPTION	QTY
A1	Box side panel - left	1	D	Face frame & door panel	1
A2	Box side panel - right	1	K	Adjustable shelf	3
B	Box bottom panel	1	L	Box top panel	1
C	Box back panel	1			

HARDWARE CONTENTS

DD Rubber bumper x 2

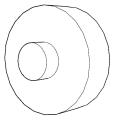

EE Adjustable shelf clip x 12

FF 1″ Flat head phillips screw x 4

1

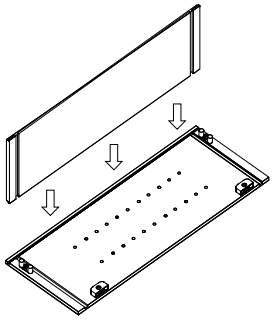

2

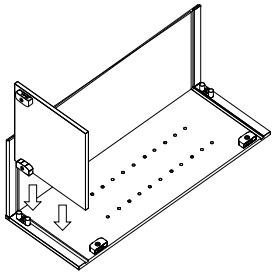

3

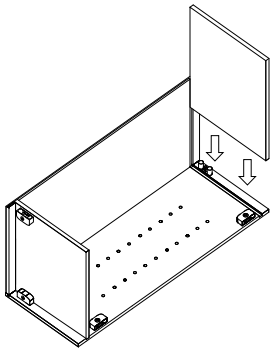

4

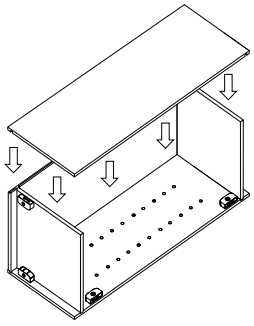

5

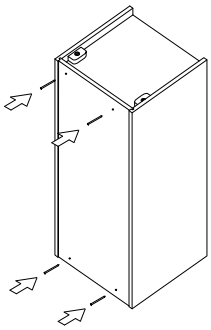

6

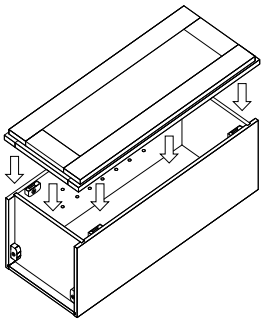

7

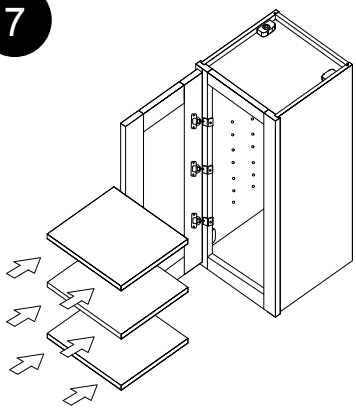

8

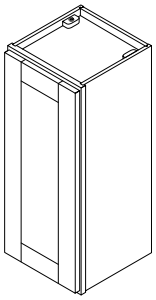

CAMLOCK CONNECTION

1. Insert the camlock to the locker.

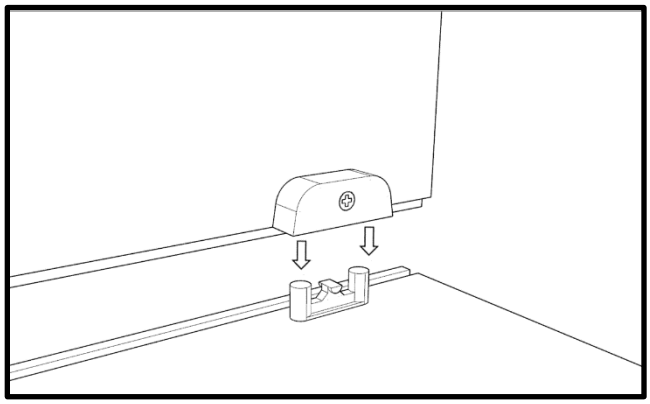

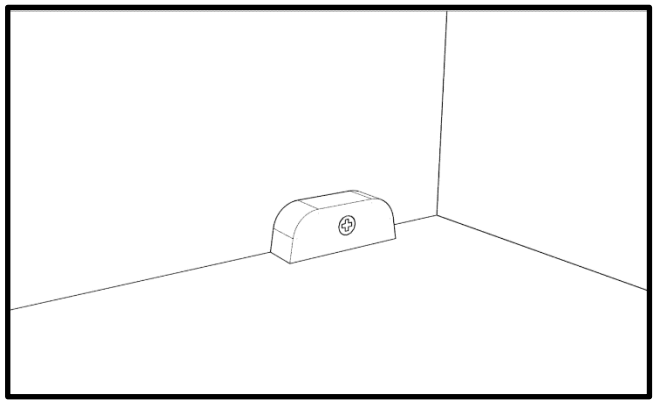

2. Turn the nut clockwise to latch two parts.

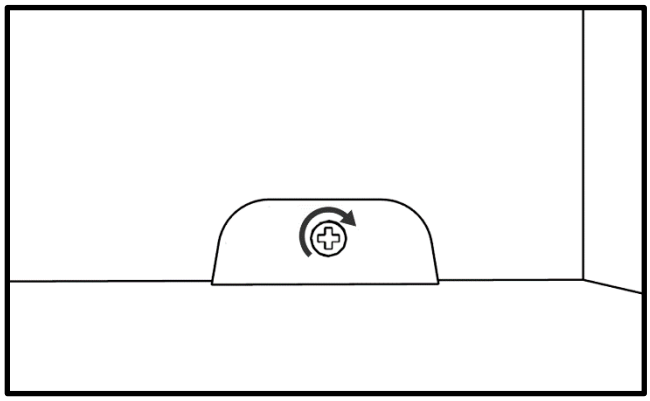

REVERSE DOOR INSTRUCTION

1. Remove the 3/4" round head Phillips screws from each hinge and take out the door panel.

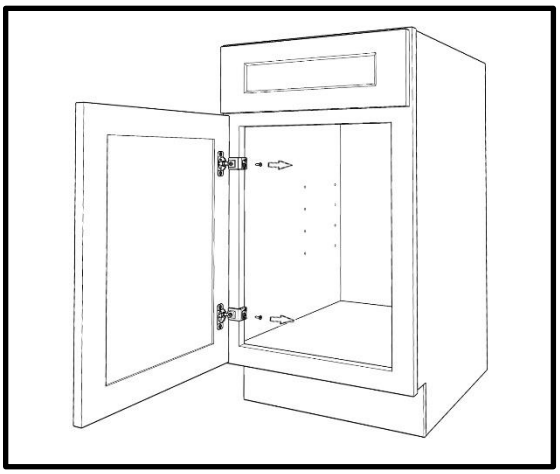

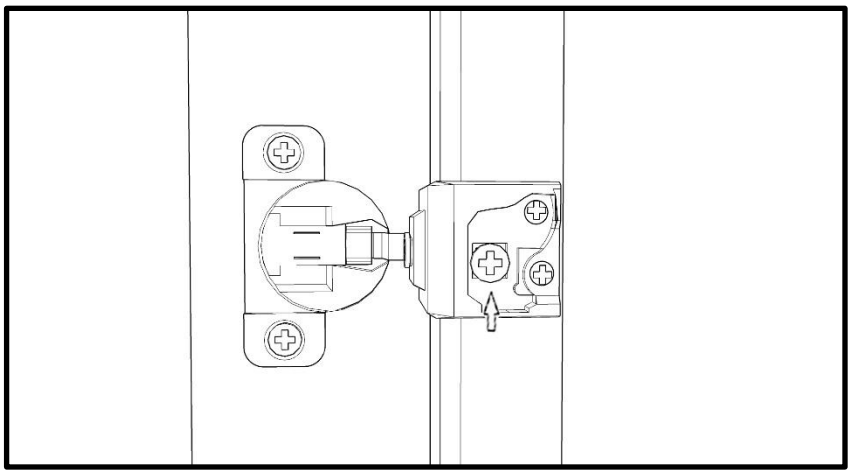

2. Reverse the door panel and drill the 3/4” round head Phillips screws into each hinge through the pre-drilled holes to tighten the hinge to the cabinet frame.

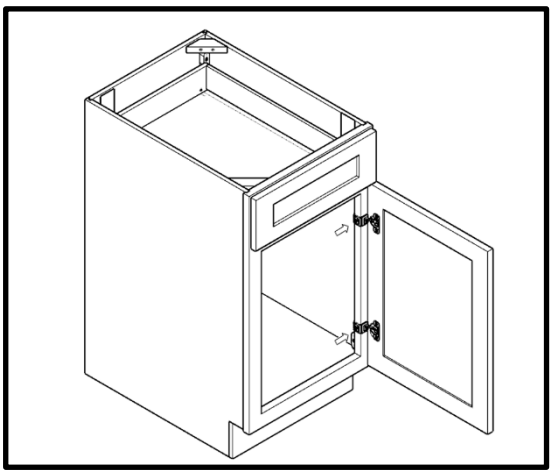

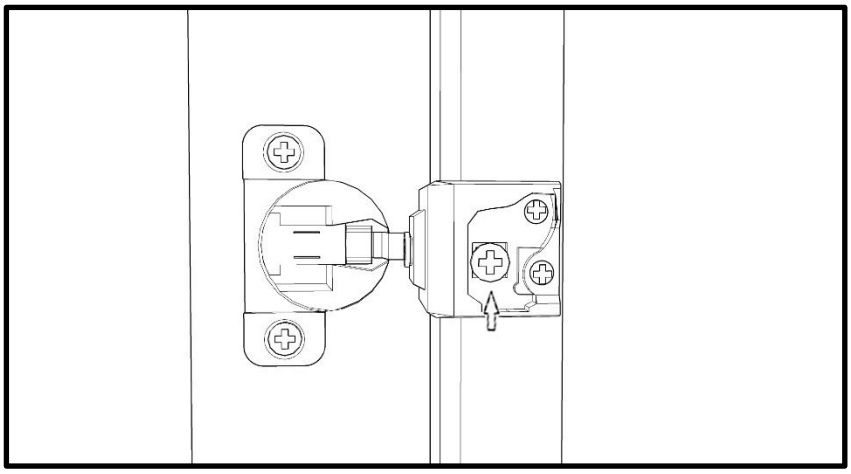

3. If the door is not level when it is installed, the customer will need to turn the screw clockwise to extend the hinge or counterclockwise to shorten the hinge.

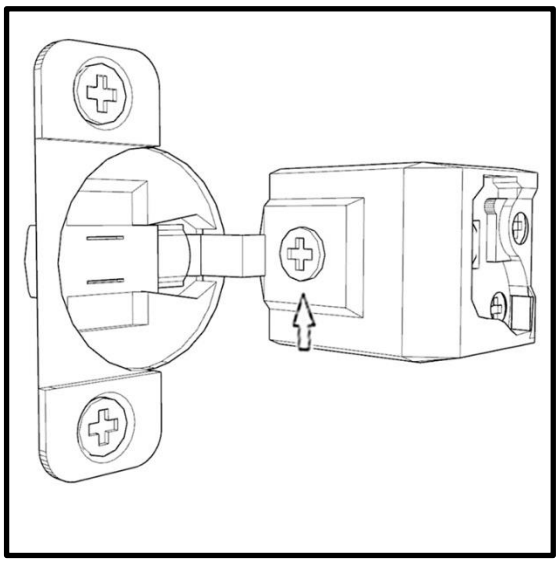

ADJUSTABLE SHELF INSTALLATION

1. Insert four shelf clips into the pre-drilled holes on the inner side of cabinet box side panels at the same height for one shelf.

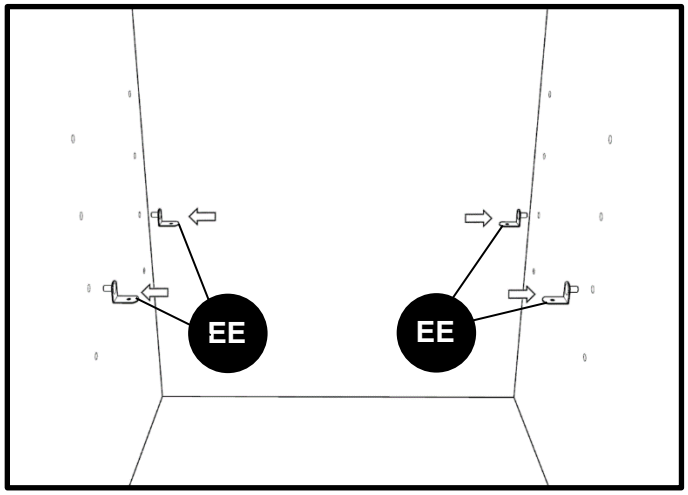

2. Insert the adjustable shelf at a tilted angle.

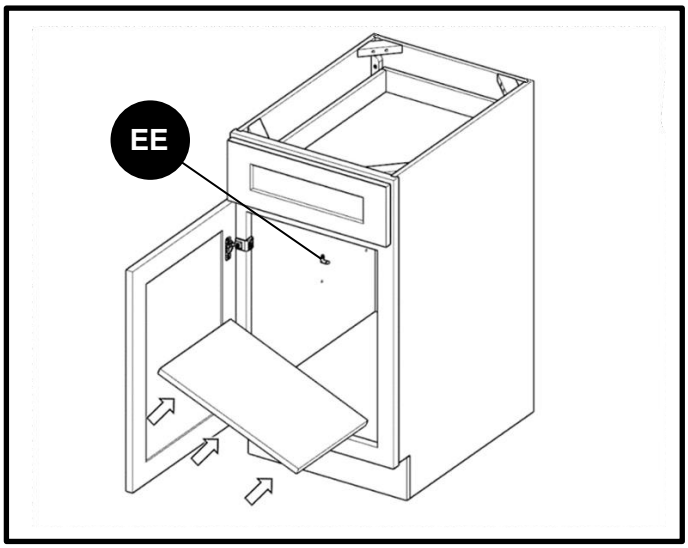

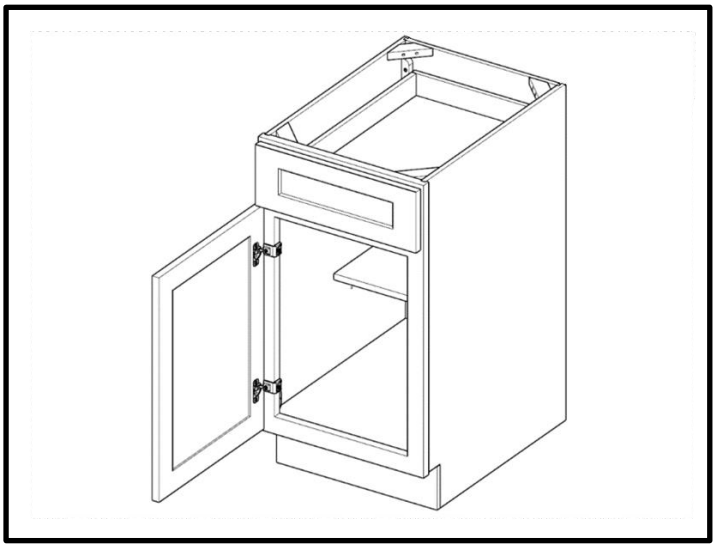

FASTEN BOX BOTTOM PANEL AND BOX BACK PANEL

1. Drill 1” flat head Phillips screw to the predrilled holes and fasten box bottom panel with box back panel

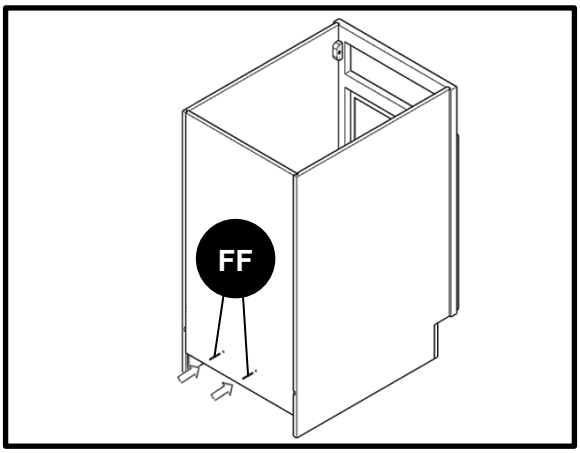

RUBBER BUMPER INSTALLATION
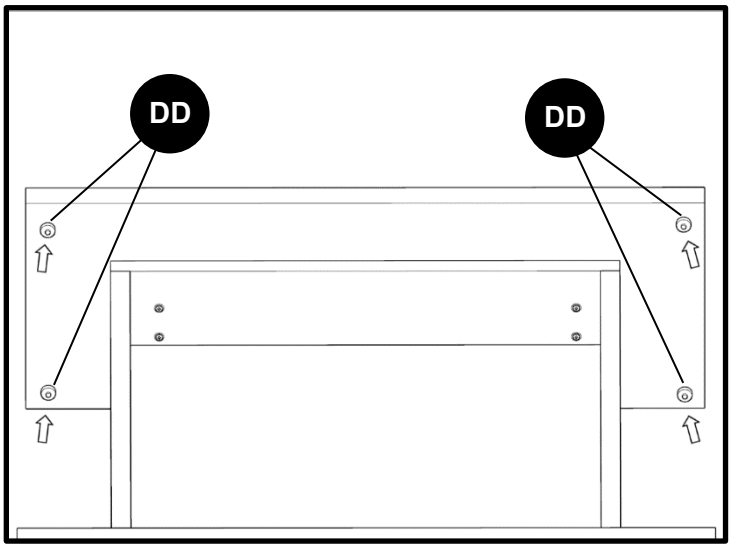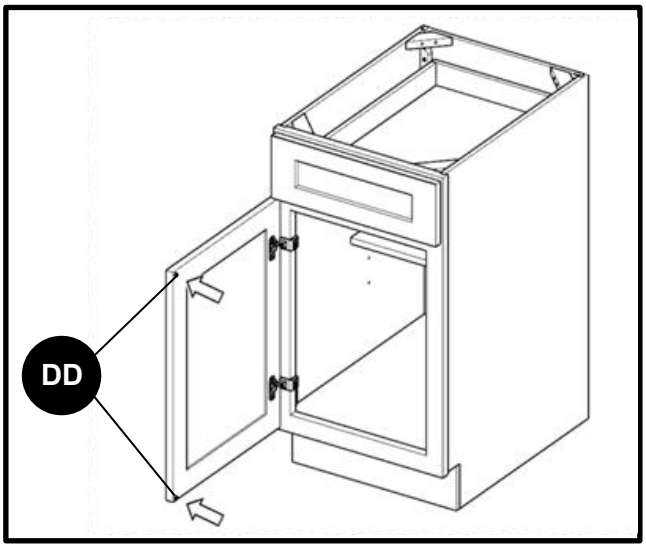
1. Attach rubber bumpers to 4 corners of each drawer face panel and 2 outsider corners of each door panel.