ASSEMBLY INSTRUCTIONS

FULL FLOOR BED WITH FENCE

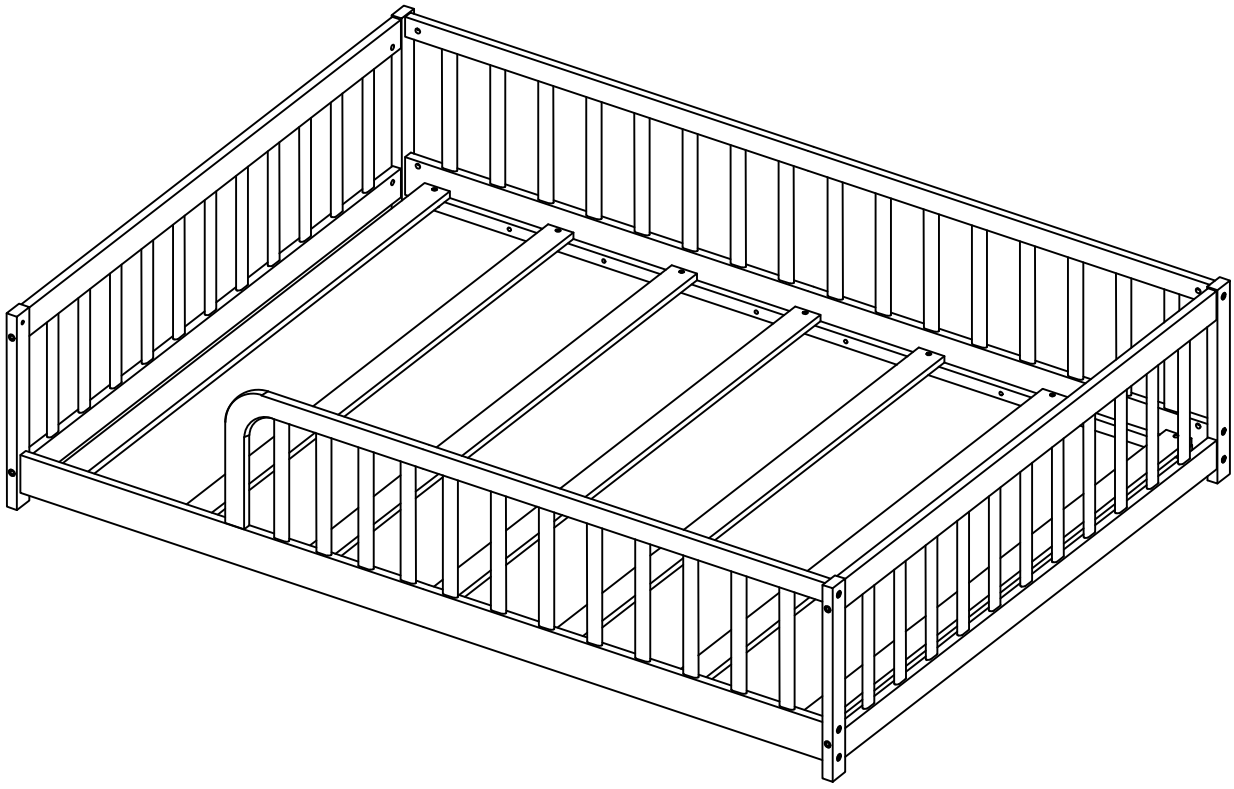

MK33942

Detail View

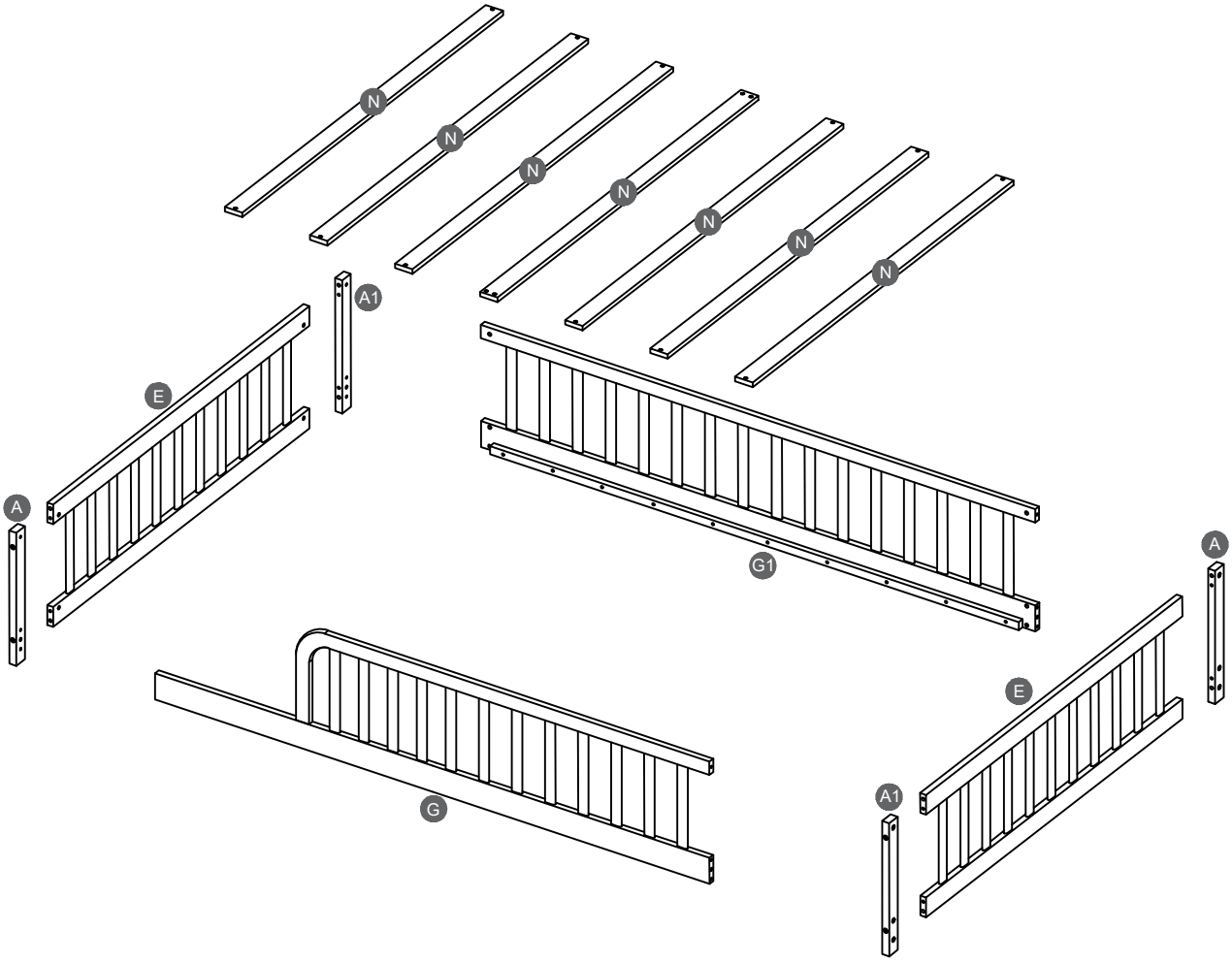

Part List

A 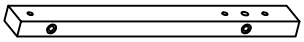 Leg - 2pcs	**A1** 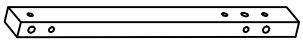 Leg - 2pcs
E 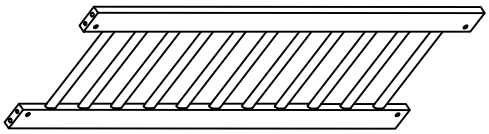 Hb. Fb. Panel - 2pcs	**G** 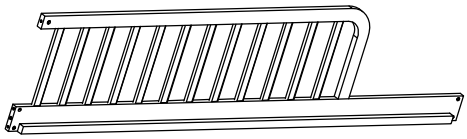 Side Rail Front - 1pc
G1 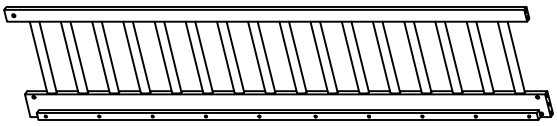 Side Rail Back - 1pc	**N** 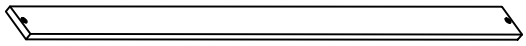 Bed Slats - 7pcs

Hardware List

1 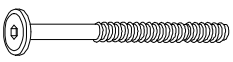 M6 x 80mm JCBC (8pcs)	**2** 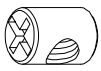 M6 x 15mm Barrel Nut (19pcs)	**3** 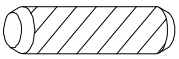 M10 x 40mm Wood Dowel (12pcs)
4  Sticker Cap (2pcs)	**5** 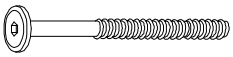 M6 x 65mm JCBC (11pcs)	**6**  20 x 20 x 228mm Wood Block (1pc)
7  M4 x 25mm CSK Screw (14pcs)	**8**  M4 Allen Key (1pc)	

ASSEMBLY TOOLS REQUIRED (NOT INCLUDED)

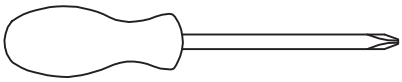



PLEASE BE CAREFUL DO NOT DAMAGE THE HOLE POSITION WHEN YOU USE POWER TOOLS !

STEP 1:

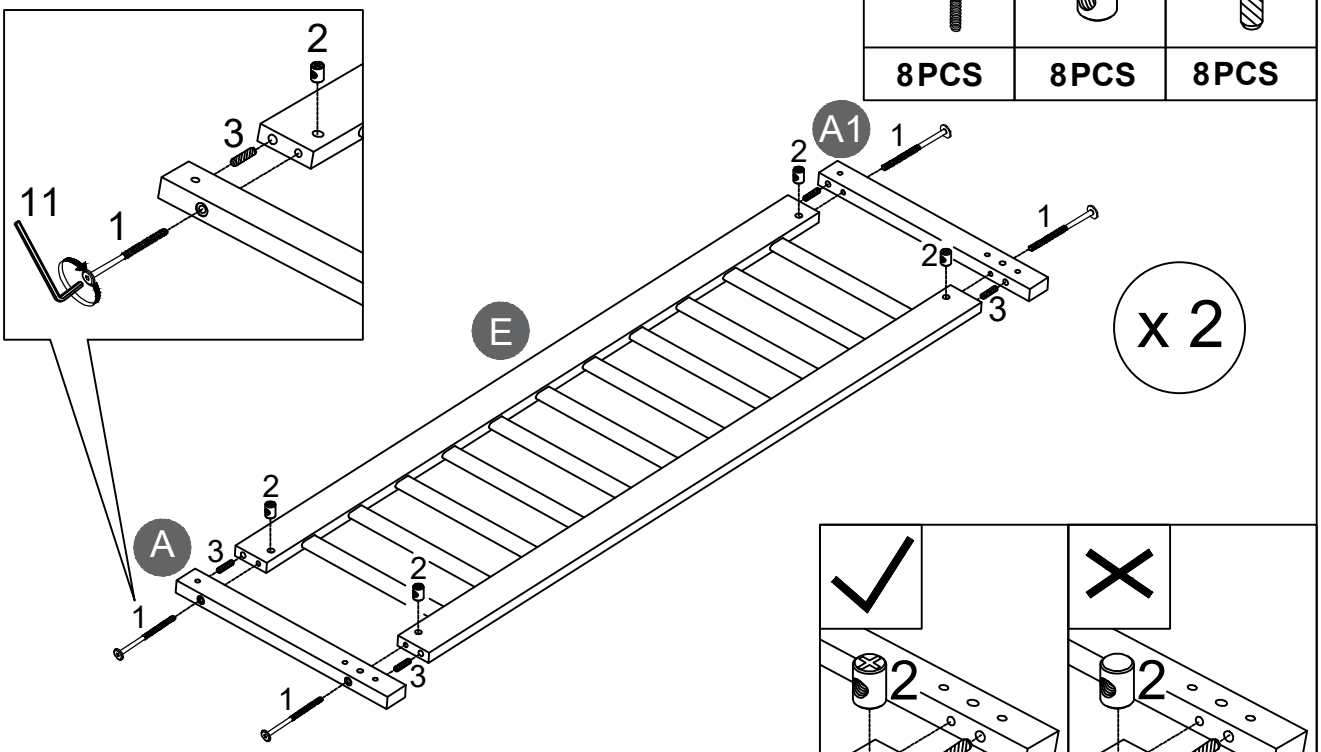

Note:Part2 will face up with the"+" mark on it, otherwise it cannot be tightened

STEP 2:

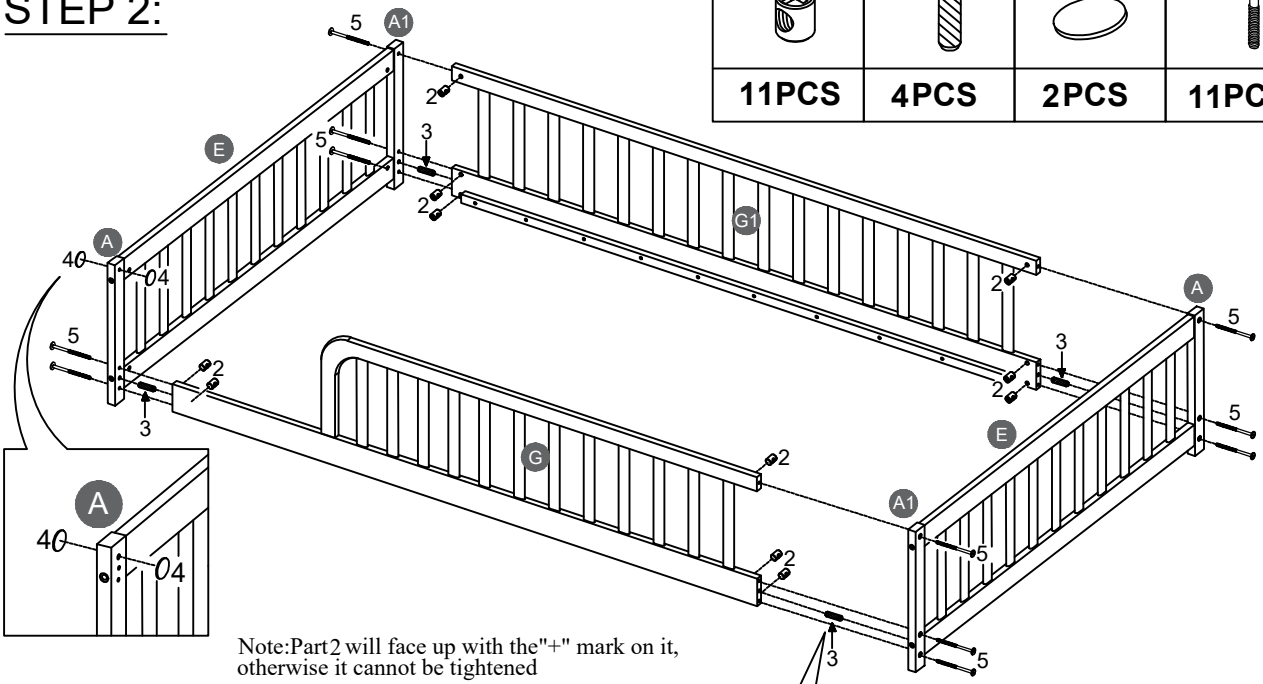

Note:Part2 will face up with the"+" mark on it, otherwise it cannot be tightened

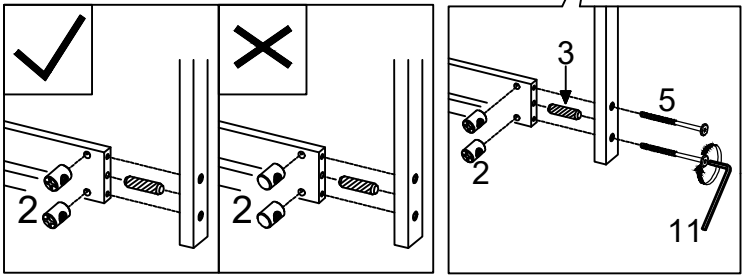

STEP 3:

6	7
1 PC	14PCS

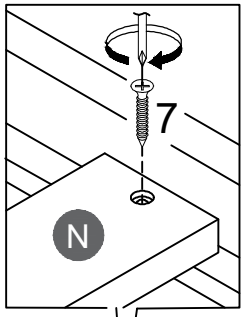

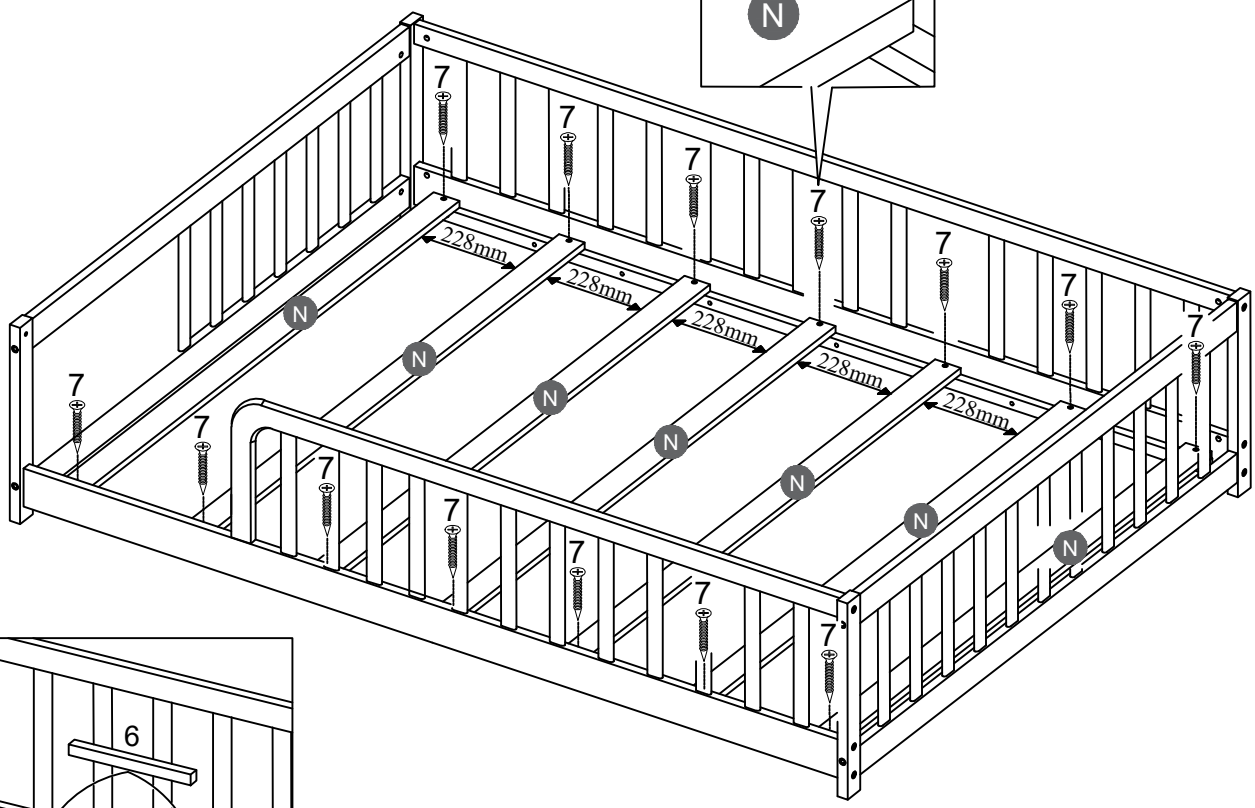

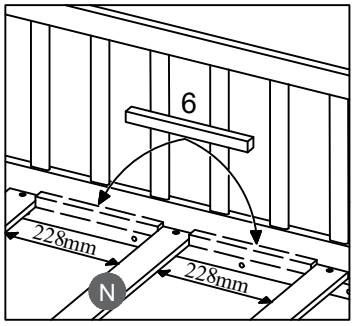

Note: Use Wood Block as a guidance distance between Bed Slats.

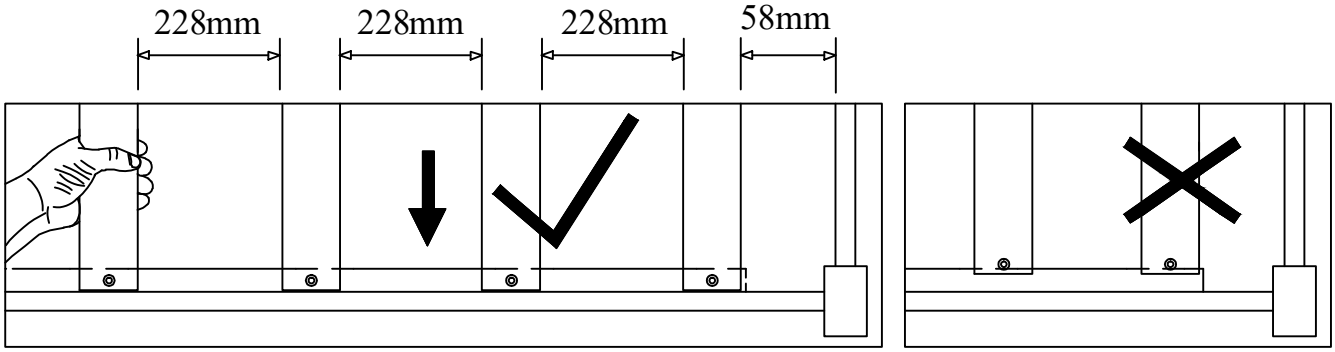

Note: Do not lock the screws of the bed slats to the outermost edge of the bed slats, you need to leave a certain space at the edges, otherwise it will cause the board to break. Do not lock the bed slats on the edge of the wood, please hold firmly before screwing , hold it in place with one hand, then lock the screw.