DeerValley Bathroom Sliding Shower Door

DeerValley®

Model #DV-1SD0246B

Overall Dimension: 60" W x 76" H

Features:

- 3/8" thick tempered safety glass provides impact durability and high strength; Hardware is crafted from superior stainless steel, corrosion-proof to ensure long-lasting performance.
- The premium materials and advanced construction of this framed bathroom glass door ensure a watertight seal, preventing any water from escaping from your shower and bathroom floor, providing a superior wet/dry separation experience.
- The semi-frameless shower door slides left and right, comes with illustrated instructions and all necessary accessories for easy installation. Installation by a professional is recommended. Available in three colors: black/silver/gold.
- High-quality anti-collision parts provide effective protection for walls, preventing scratches, dents, and other damage caused by impacts. These components are designed to absorb and dissipate the force of collisions, thereby minimizing the risk of surface damage.
- The front LED light strip around the vanity mirror is brighter, clearer and more realistic than backlit vanity mirrors, allowing you to see your truest self while applying makeup, beauty and skincare. Although this is a modern LED bathroom vanity mirror, it can also be used in bedrooms, beauty salons, hotels, checkrooms and more.



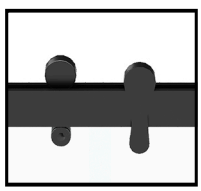





Package Included:

- Mounting Hardware Included
- 2 Handles Included
- Anti-Collision Parts
- Movable Doors

DeerValley Bathroom
Sliding Shower Door

DeerValley®

Technical Specifications:

+ Product Size: 60" W x 76" H
+ Weight: 185.2 lbs
+ Door Handing: Reversible
+ Glass thickness: 3/8"
+ Glass Certification: ANSI/SGCC
+ Door Installation Type: Double sliding
+ Installation Method: Drilling holes against the wall

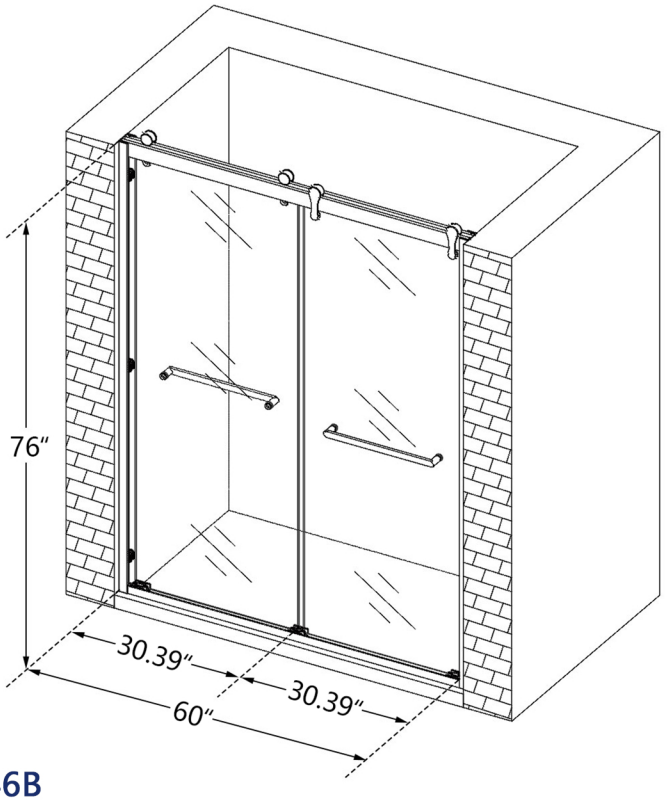

#DV-1SD0246B

Shower doors are individually handcrafted, so sizes may vary slightly.

5 Years Warranty

All DeerValley Shower Door come with our warranty within five years.

TEL: 312-626-9466 | service@deervalleybath.com