Assembly Instructions

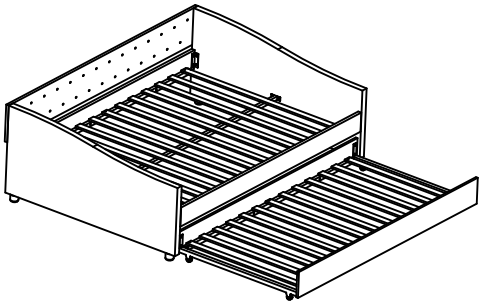

1. Important Safeguards

Read these instructions carefully and retain them for future use. If this product is passed to a third party, then these instructions must be included.

When using the product, basic safety precautions should always be followed to reduce the risk of injury including the following:

⚠ CAUTION **Risk of injury!**

- **Product can tip over! Do not let children climb on or play with the product.**
- Always use the product on a firm, level ground.
- Do not stand on the product or use it as a step ladder.
- Periodcally check to see that all bolts,screws and knobs are firmly screwed. Tighten them if any are loose.
- Stop using the product at first sign of damage or if parts become detached.
- Keep the fire or all sharp objects away from the product.

2. Before First Use

⚠ DANGER **Risk of suffocation!**

- **Keep any packaging materials away from children and pets** - these materials are potential source of danger, e.g. Suffocation.
- Check the product for transport damages. Unpack all hardware bags and components to ensure you have all parts before assembly.
- Assemble product on a clean non-marring surface. Remove all the packing materials.

3. Cleaning and Maintenance

- Clean spills immediately by using a soft, clean, lint-free cloth to prevent staining.
- Never use harsh chemicals or solvents on your product as this may damage the product.
- Marks and stains are difficult to remove, we recommend you consult a professional. If you use a professional product, pretest it in an inconspicuous area for any signs of discoloration or shrinking.

A x 1	B x 1	C x 2
D x 1	E x 1	F x 1
G x 2	H x 1	I x 1
J x 1	K x 4	L x 4
M x 4	N x 2	O x 40 1/4" x 3/4"
P x 6 1/4" x 1-1/2"	Q x 16 M4 x 10mm	R x 28 1/4"
S x 28 1/4"	T x 1	U x 1

⚠ NOTE:

Suggest to assemble the product by 2 or more people.
Do not tighten screws before all product parts be together.

1

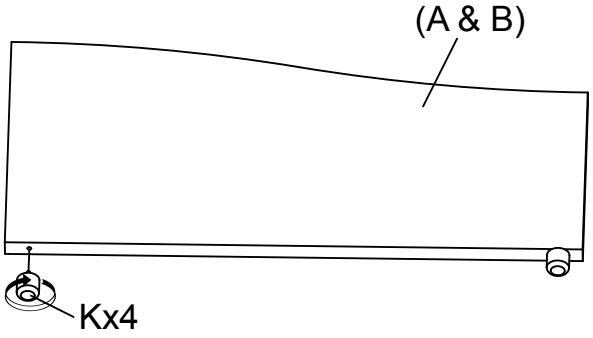

2

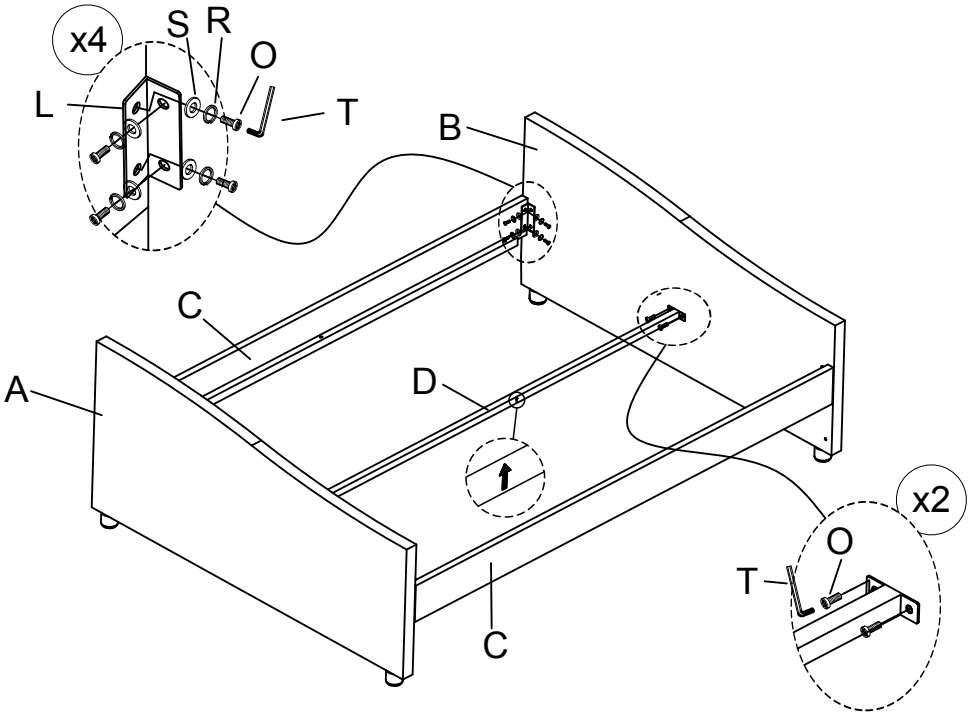

3

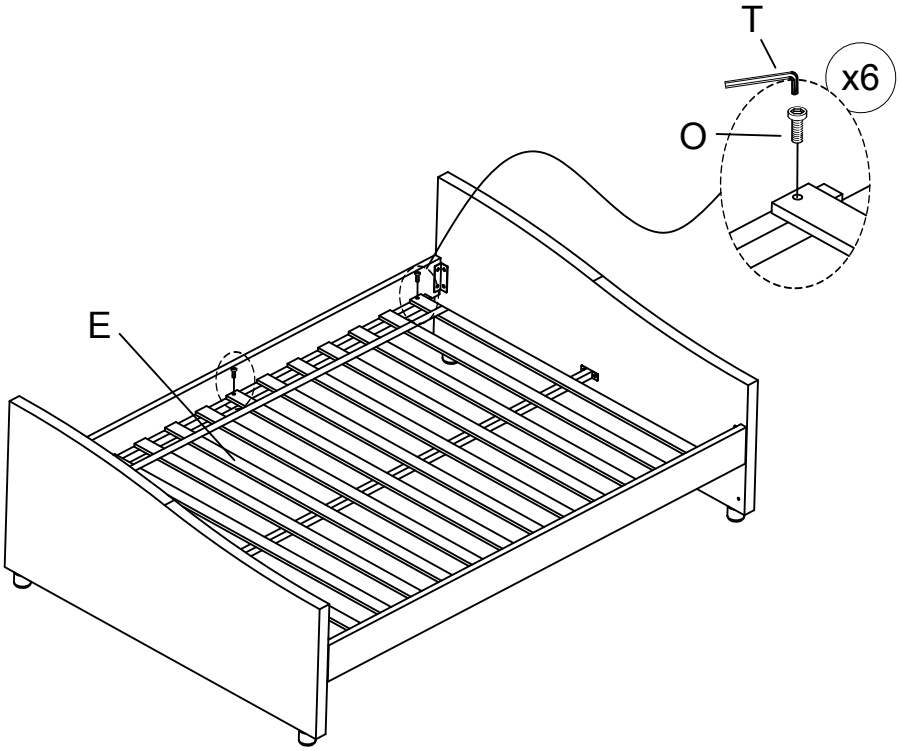

4

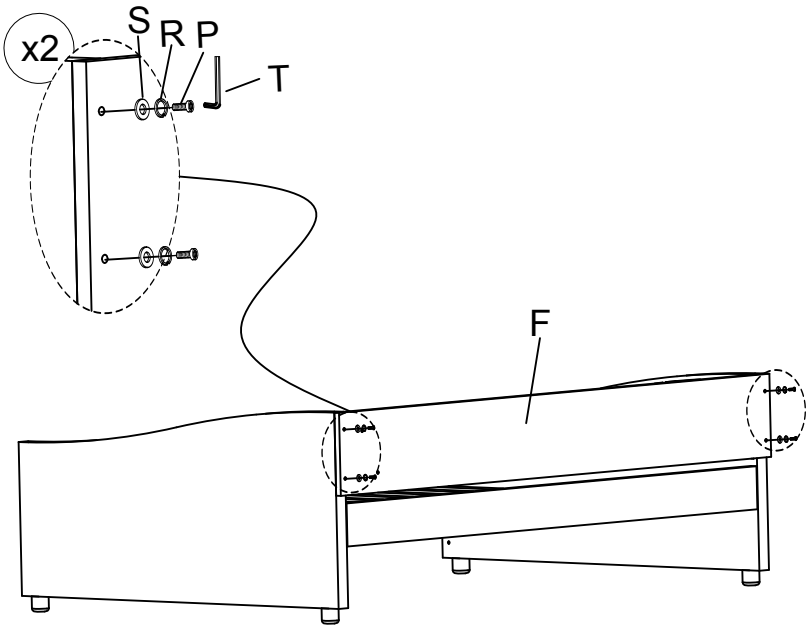

5

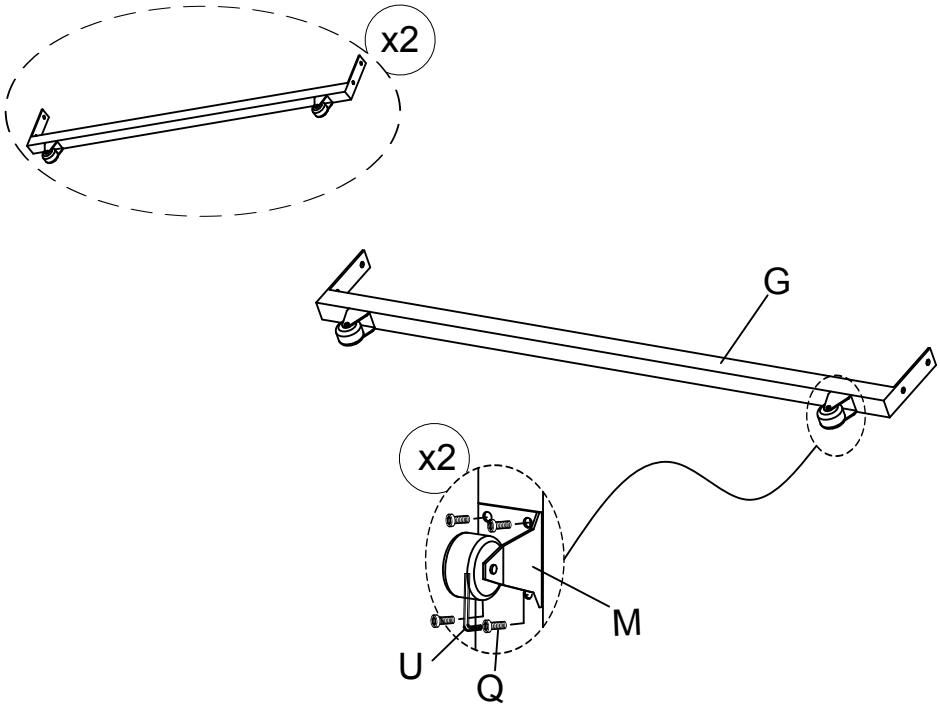

6

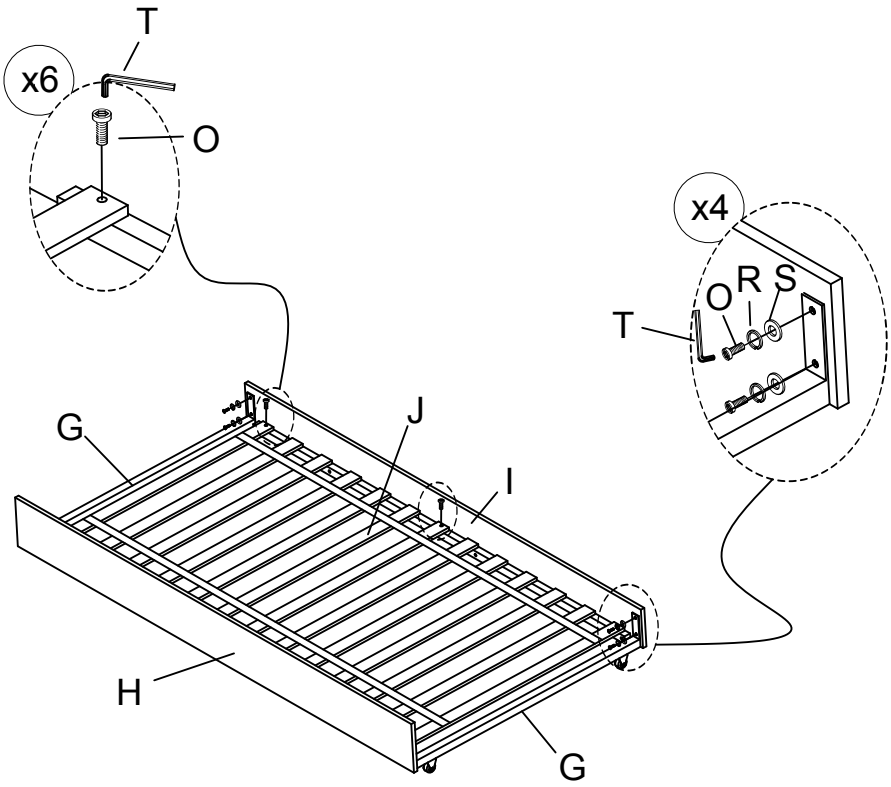

7

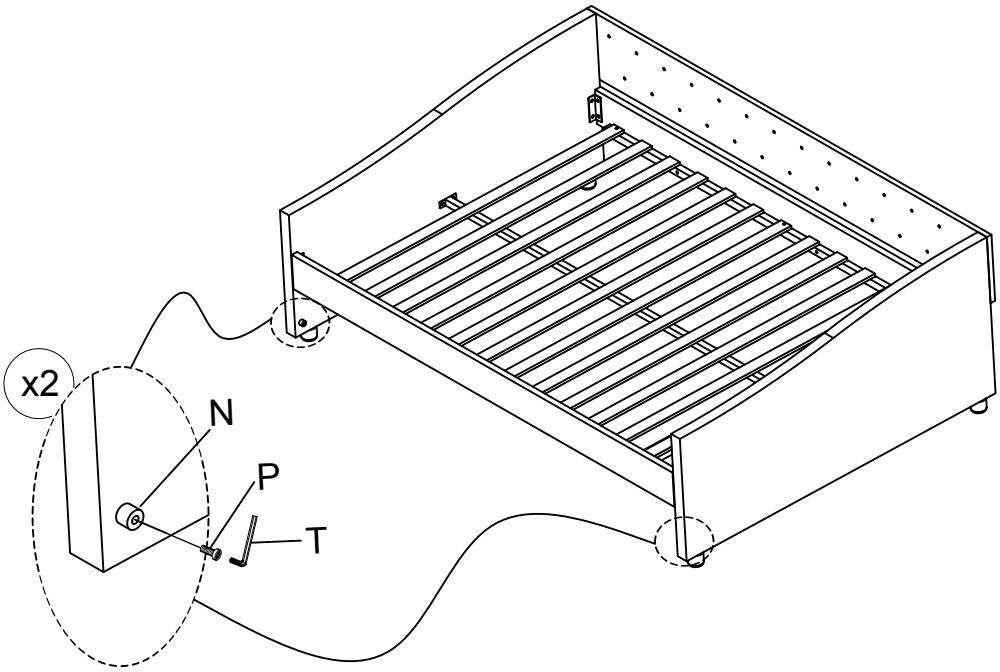

8

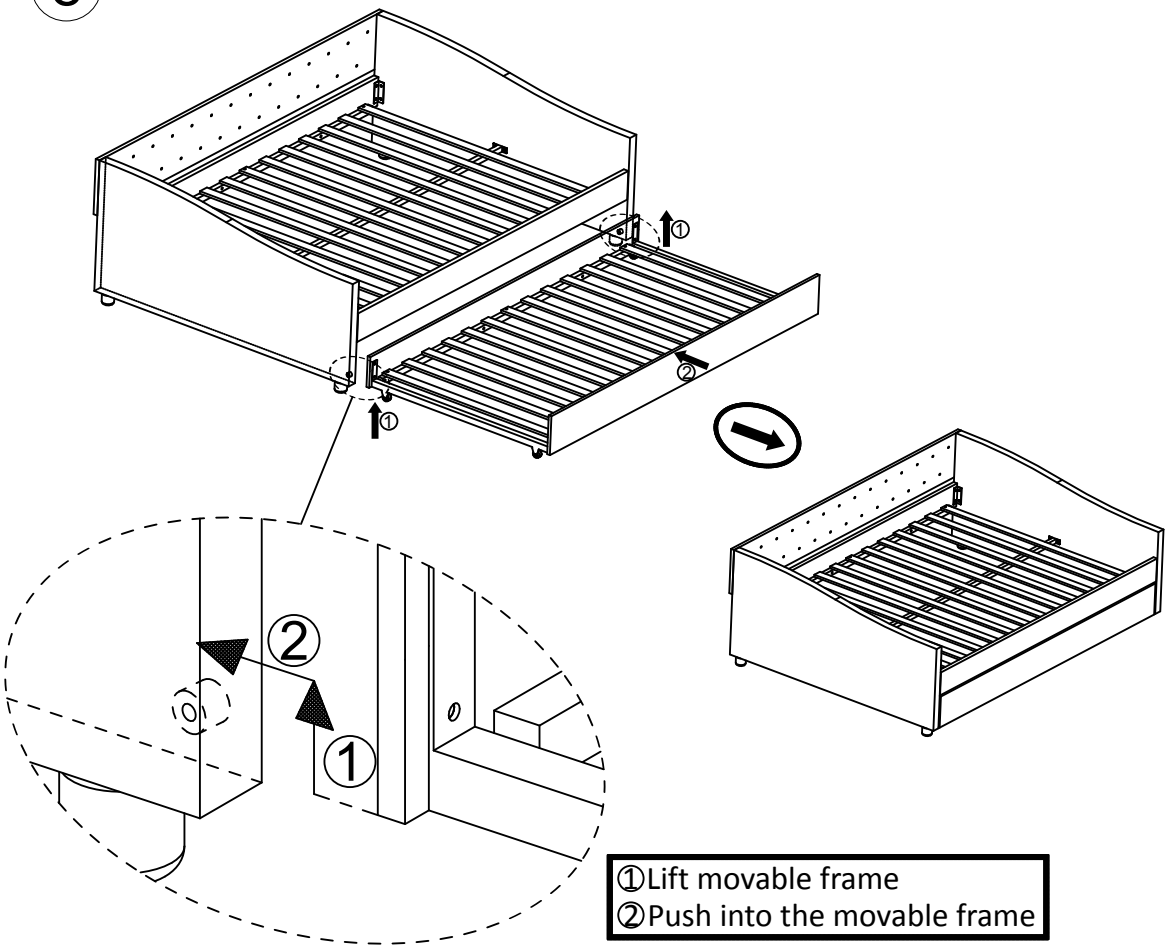

①Lift movable frame
②Push into the movable frame