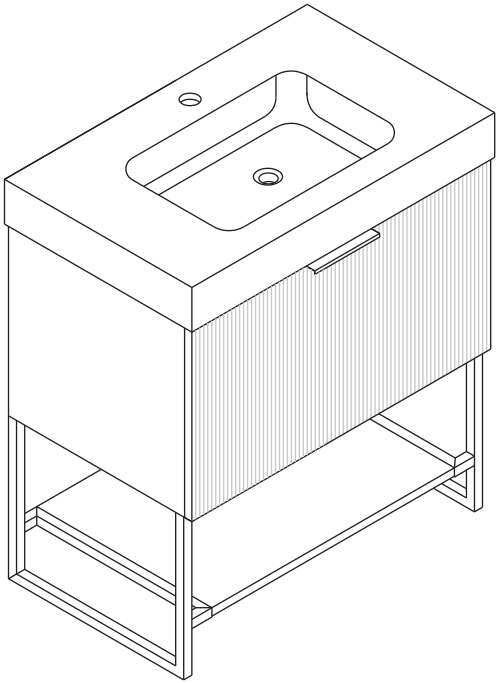

Bathroom Vanity

ASSEMBLY INSTRUCTIONS

Notice:

1.Follow the installation instructions. Please confirm all accessories are preset before installation.

2. Do not fully tighten the screws during initial assembly. Fully tighten screws only once all pieces which are correctly assembled.

3. If you encounter any problems during installation, please contact our customer service.

4. Please unbox the item from the side with an open-label and put a carpet on the foor to avoid scratching it.



Recommended installers : 2



Put a carpet on the floor before unpacking

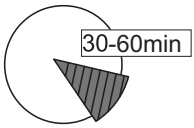

Estimate installation time: 30 minutes

Item no.	Reference Image	Qty
A	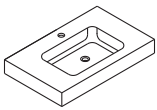	x1
B	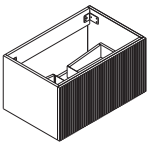	x1
C	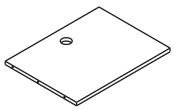	x1
1	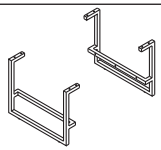	x1
2	 Ø6x26mm	x6

Item no.	Reference Image	Qty
3	 Ø15x9mm	x6
4	 Ø3.5 x 14 mm	x2
5	 Ø4 x 16 mm	x8
6	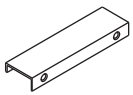	x1

1

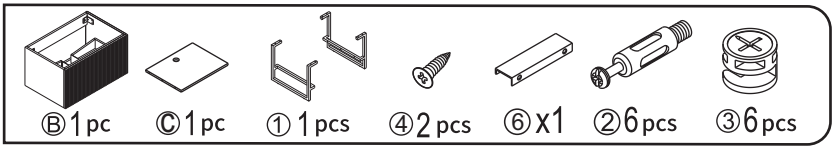

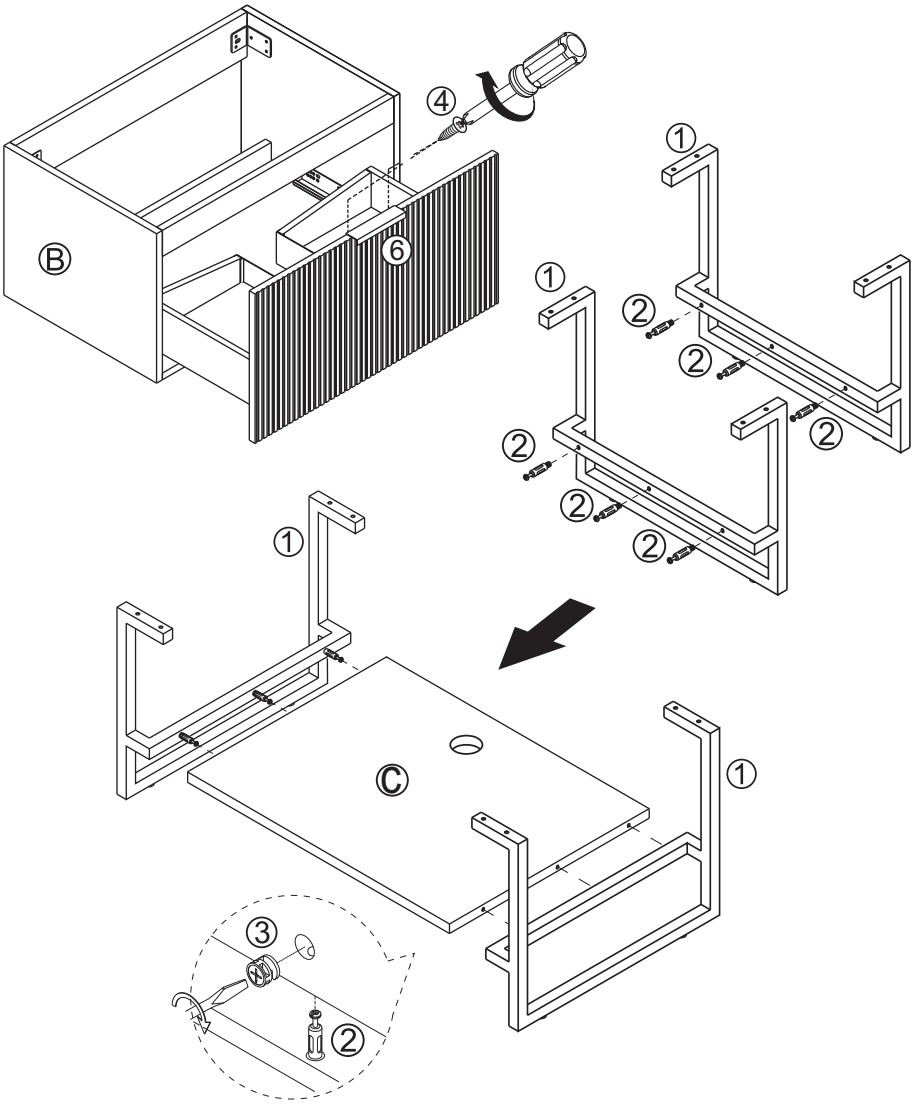

2



⑤8pcs

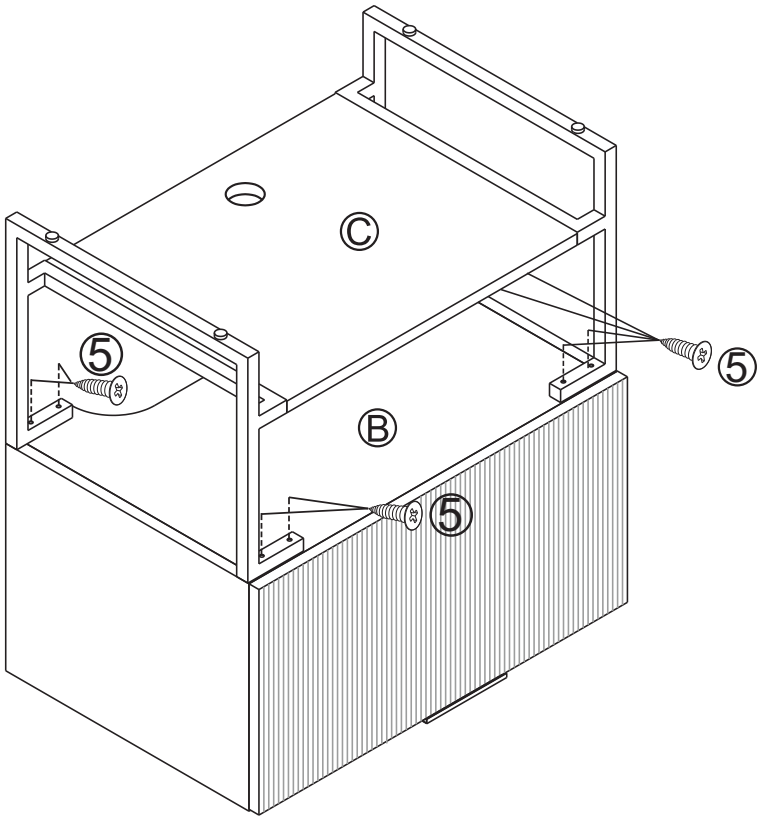

3

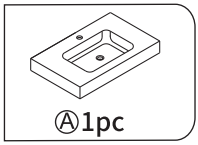

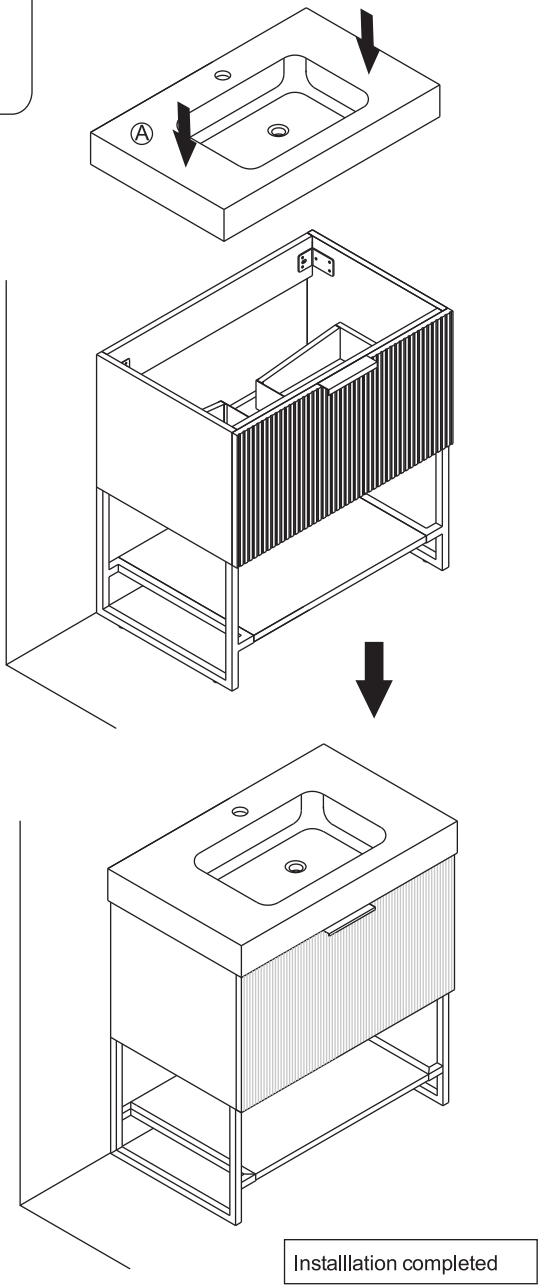

Installlation completed

4

Installation of drain assembly

Turn the screw at the bottom of the guide rail counterclockwise!

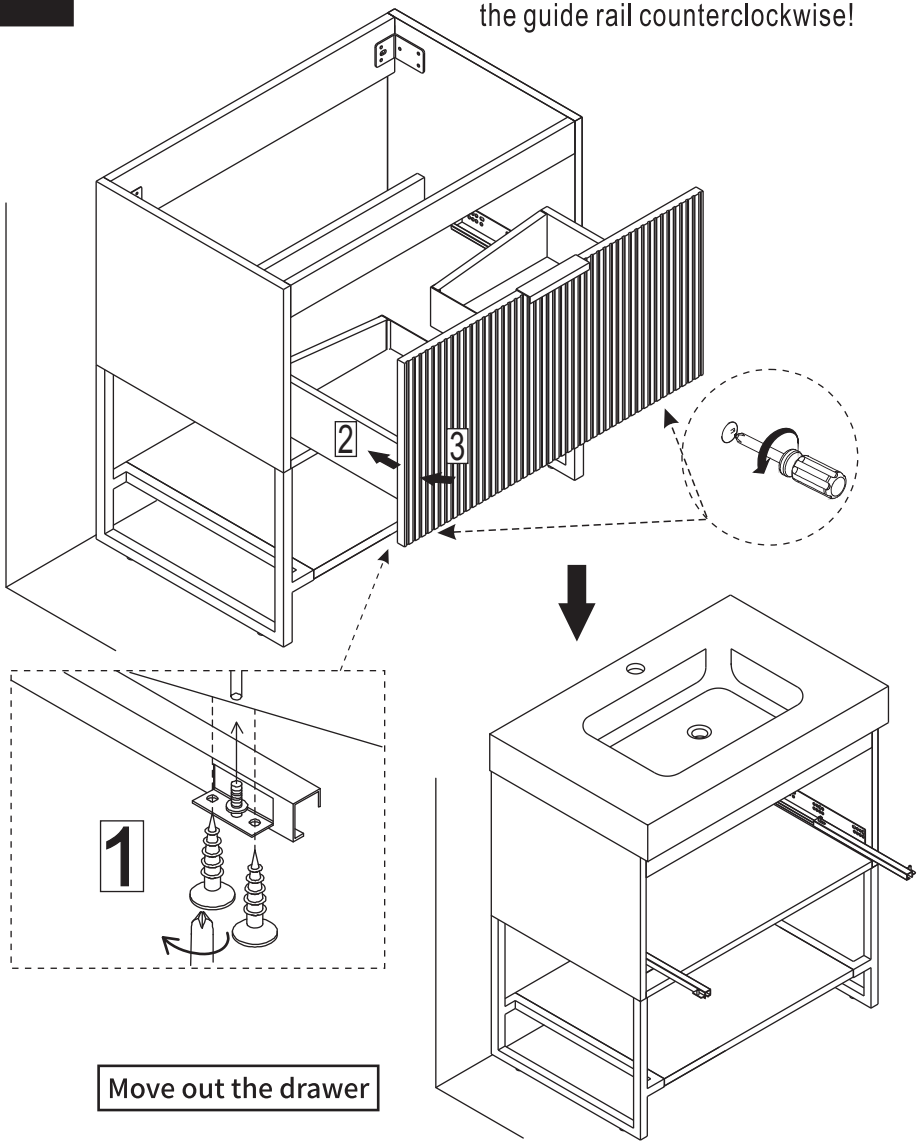

Move out the drawer

5

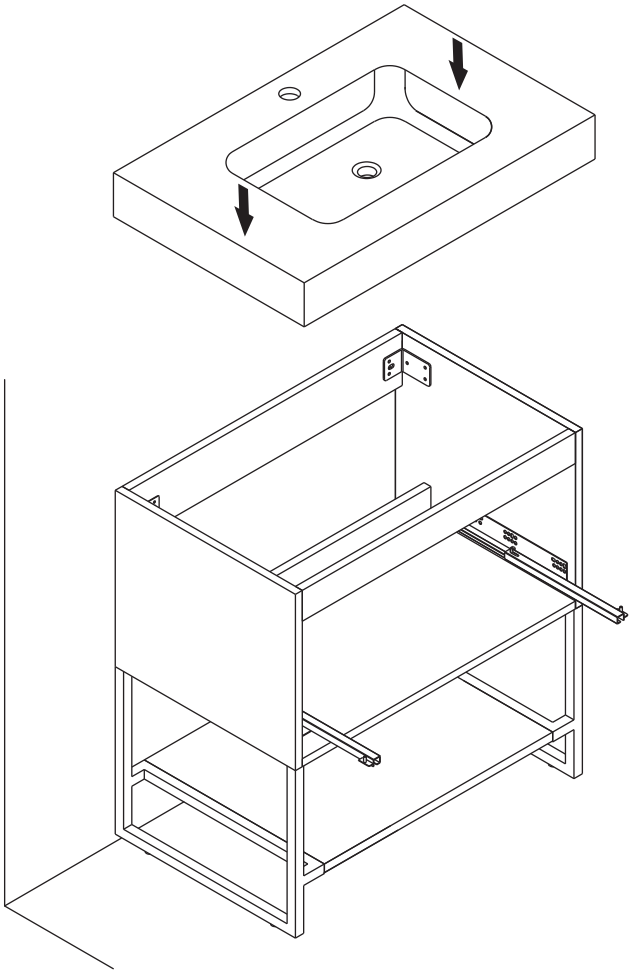

Installation of drain assembly

6

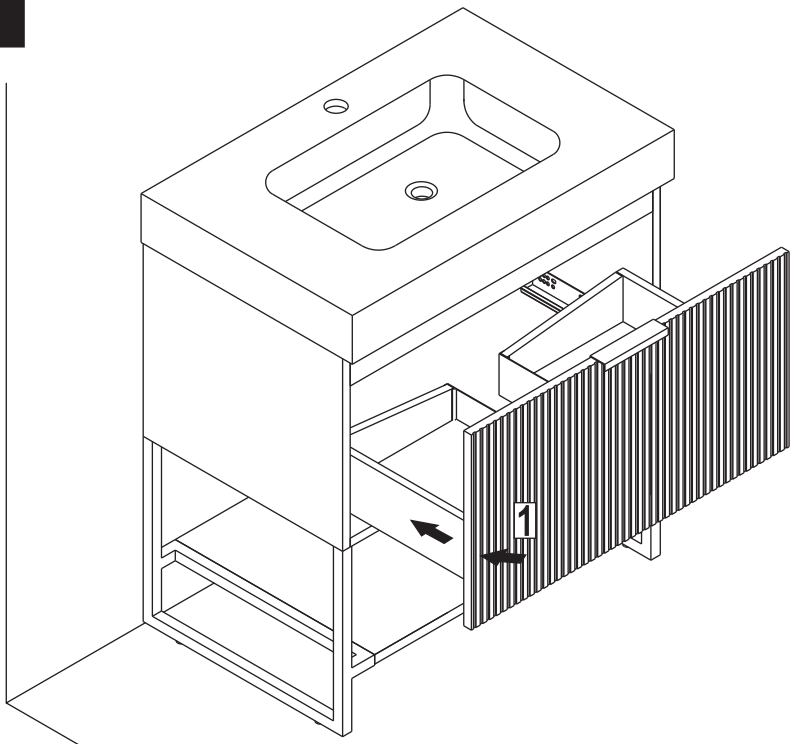

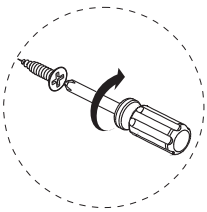

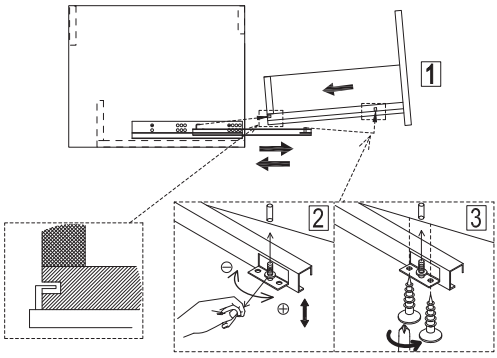

Installlation completed