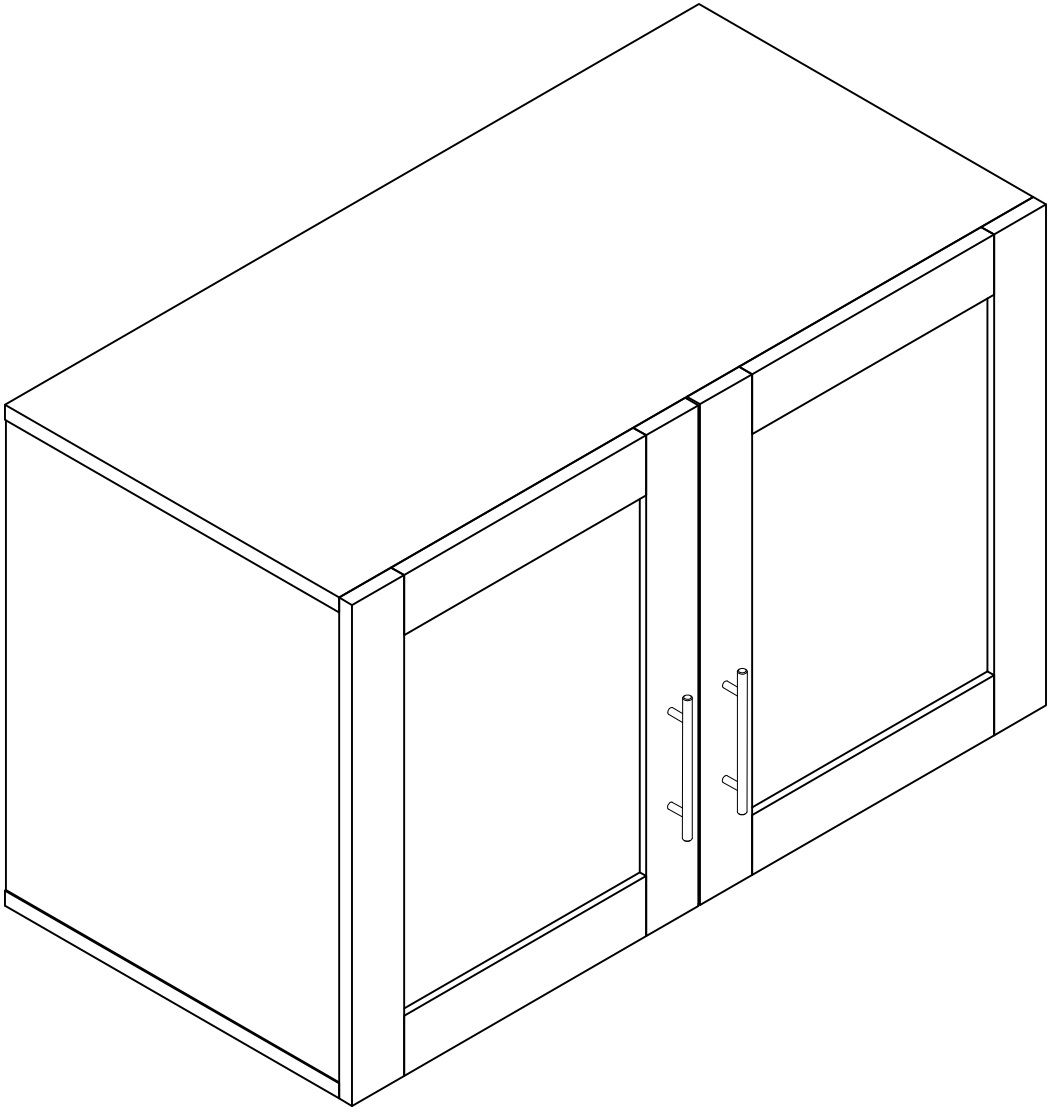

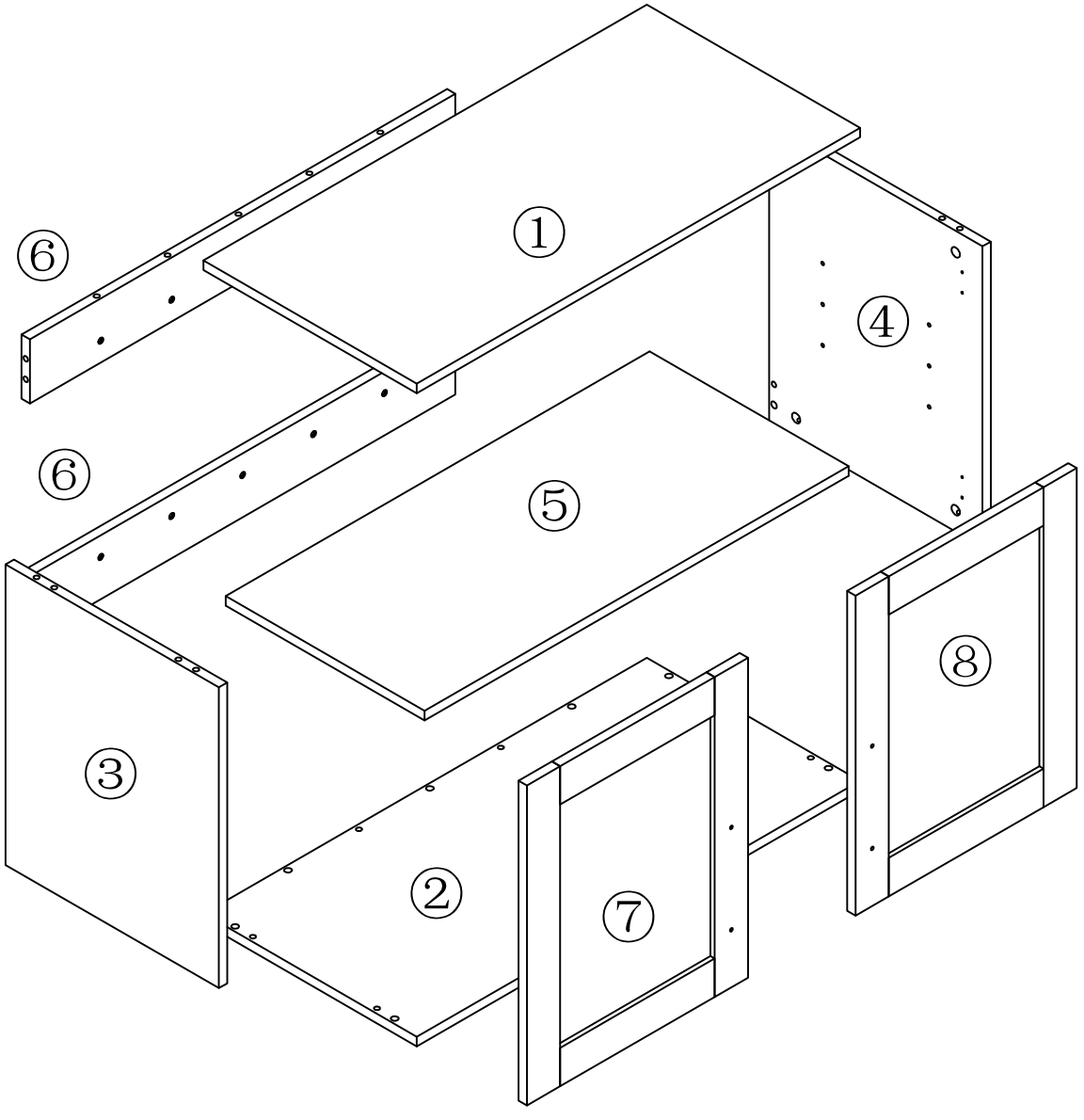

A	B	C	D	E	F	G	H	I	J
		8*40 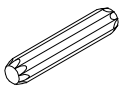	3.5*14	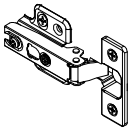	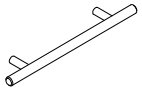	4*18		4*50	8*40 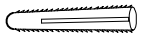
18PCS	18PCS	16PCS	16PCS	4PCS	2PCS	4PCS	4PCS	10PCS	10PCS

1 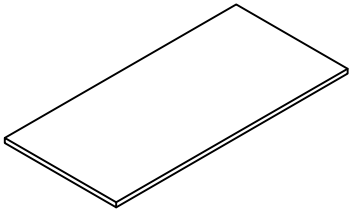 800*385 1PS	2 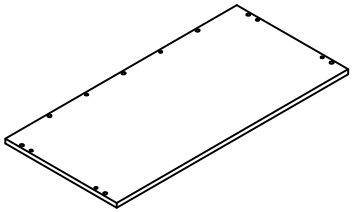 800*385 1PS	3 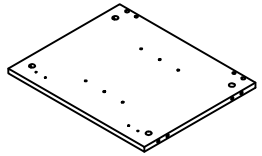 470*385 1PS	4 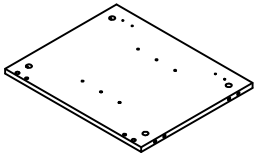 470*385 1PS	5 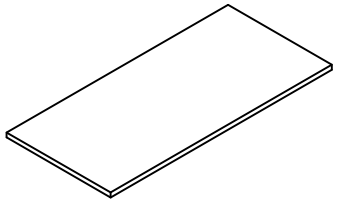 765*395 1PS
6 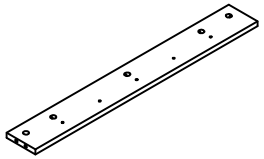 768*100 2PS	7 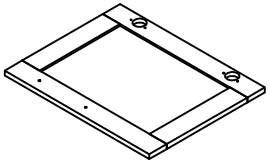 500*399 1PS	8 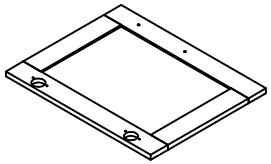 500*399 1PS		

Hardware installation demonstration

NOTE:Please make sure "A"hardware tightened and can't be pulled out!

I

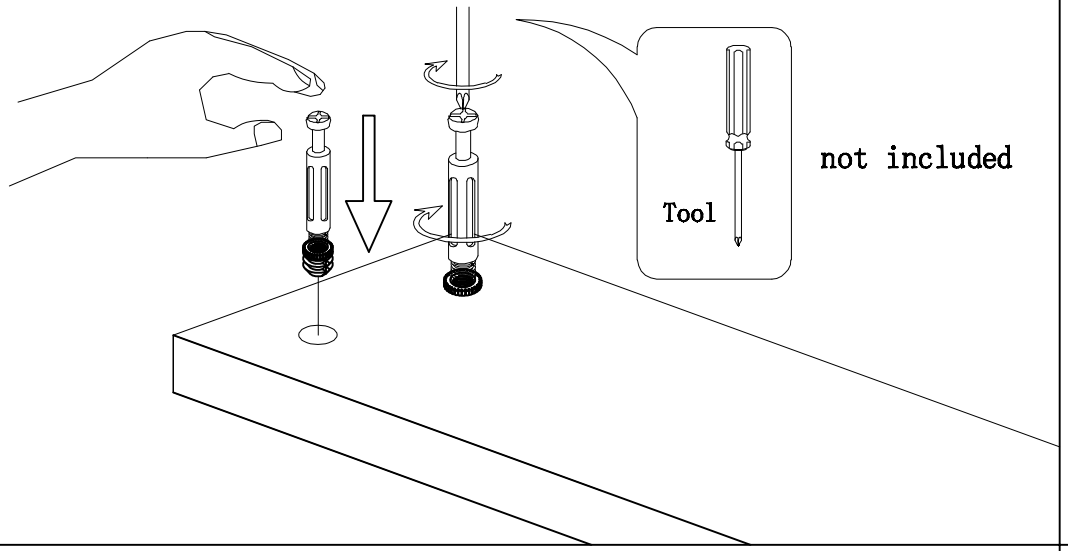

II

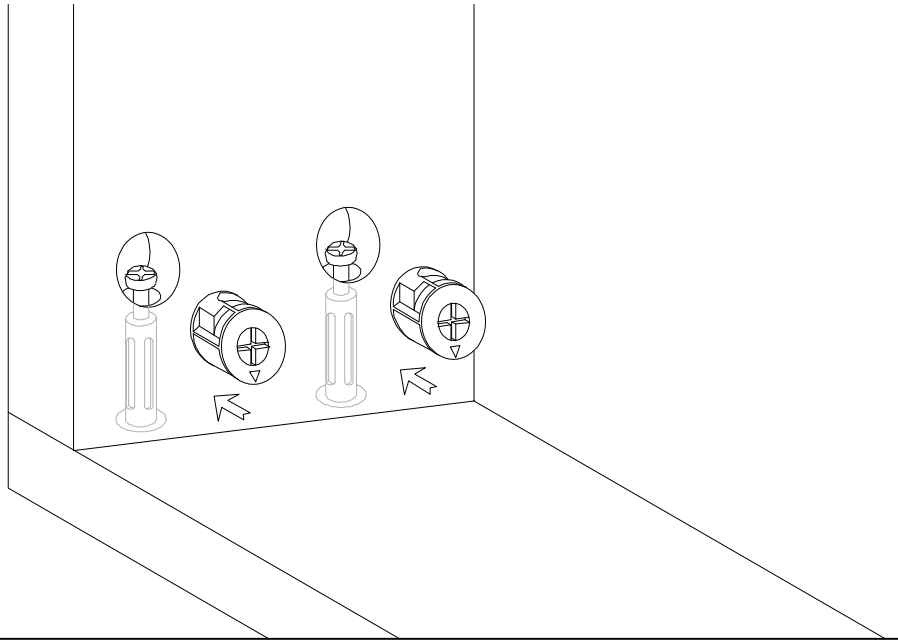

III

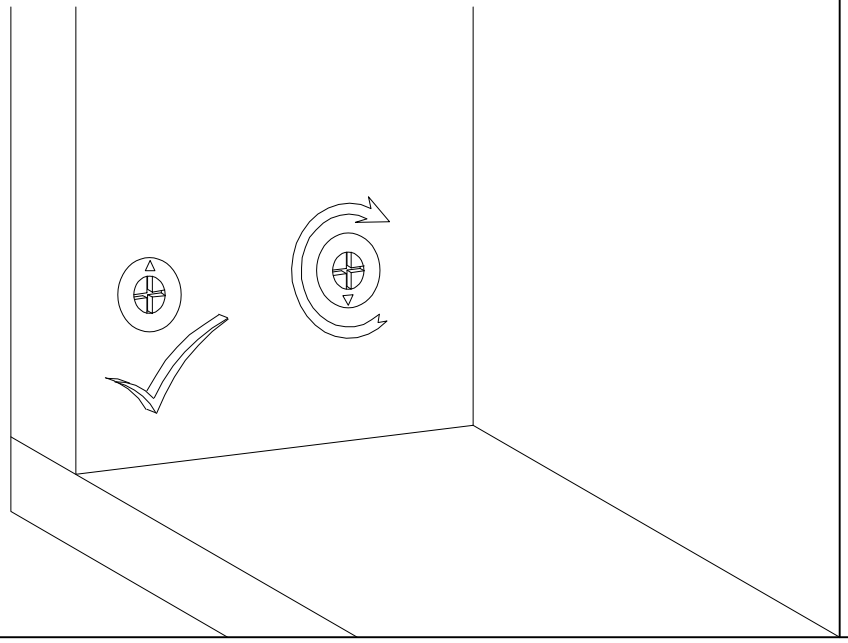

IV

Scan QR code for assembly video

①

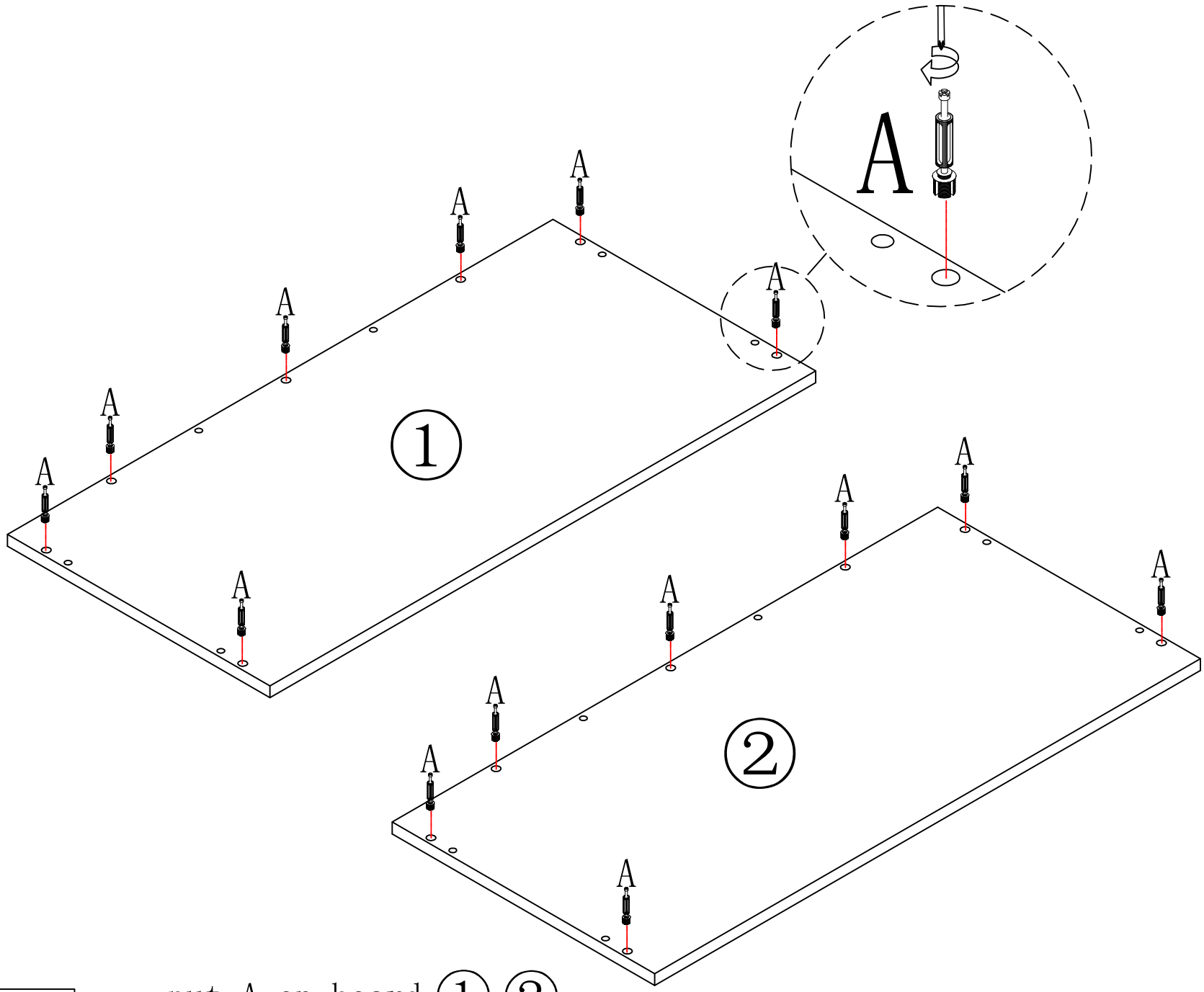

	A*14

put A on board ① ②

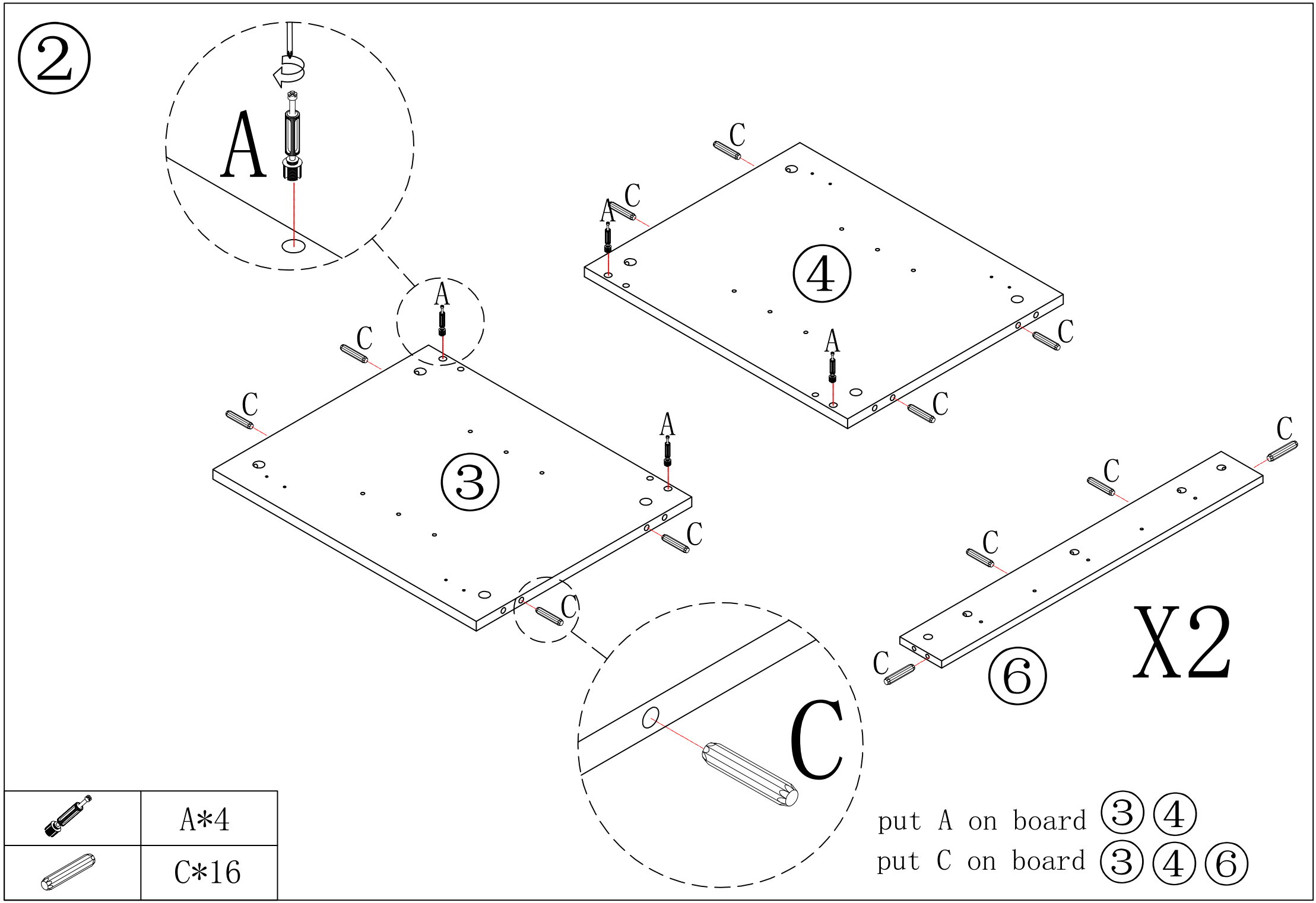
②
A
C
③
④
⑥
X2
put A on board ③④
put C on board ③④⑥
A*4
C*16

③ Make sure the arrow on the screw align to the hole on the side

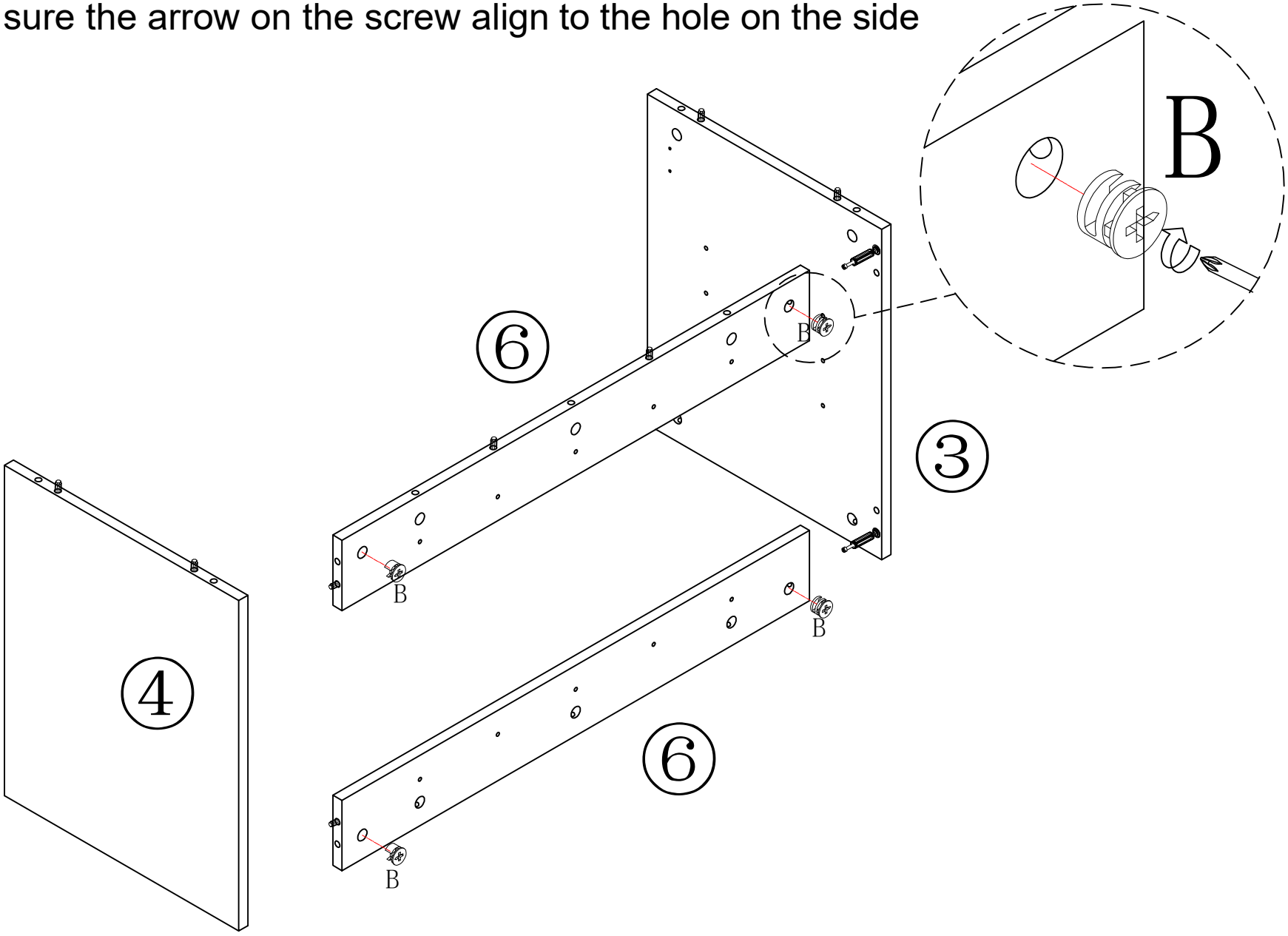

put B on board ⑥

	B*4

④

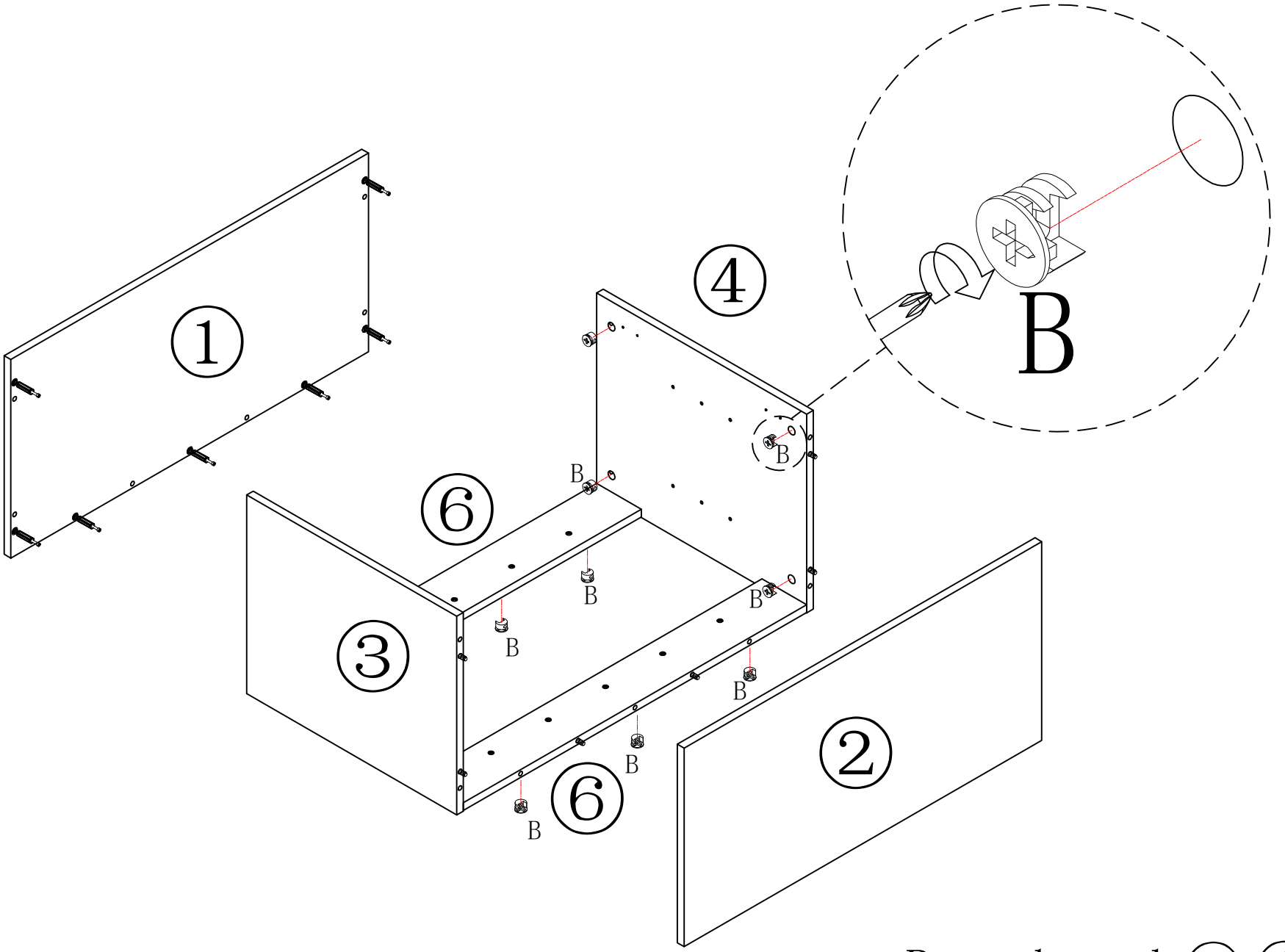

put B on board ③ ④ ⑥

	B*14

5

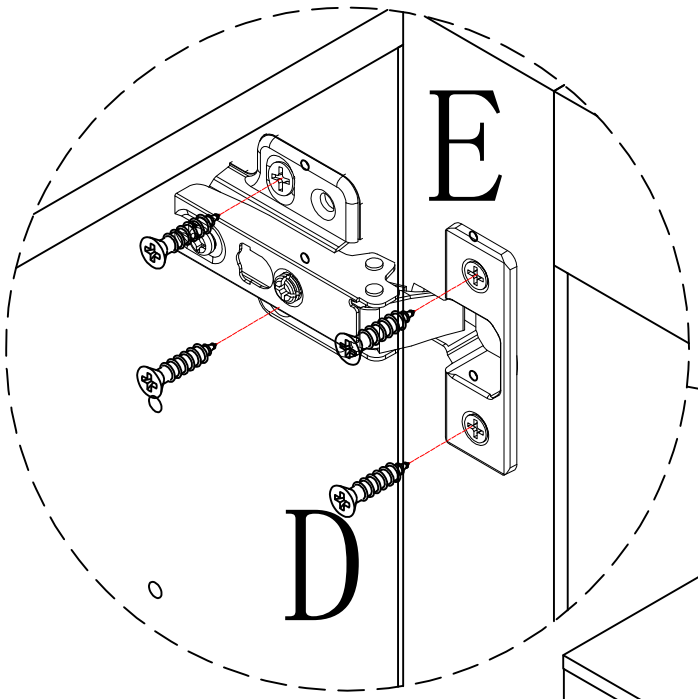

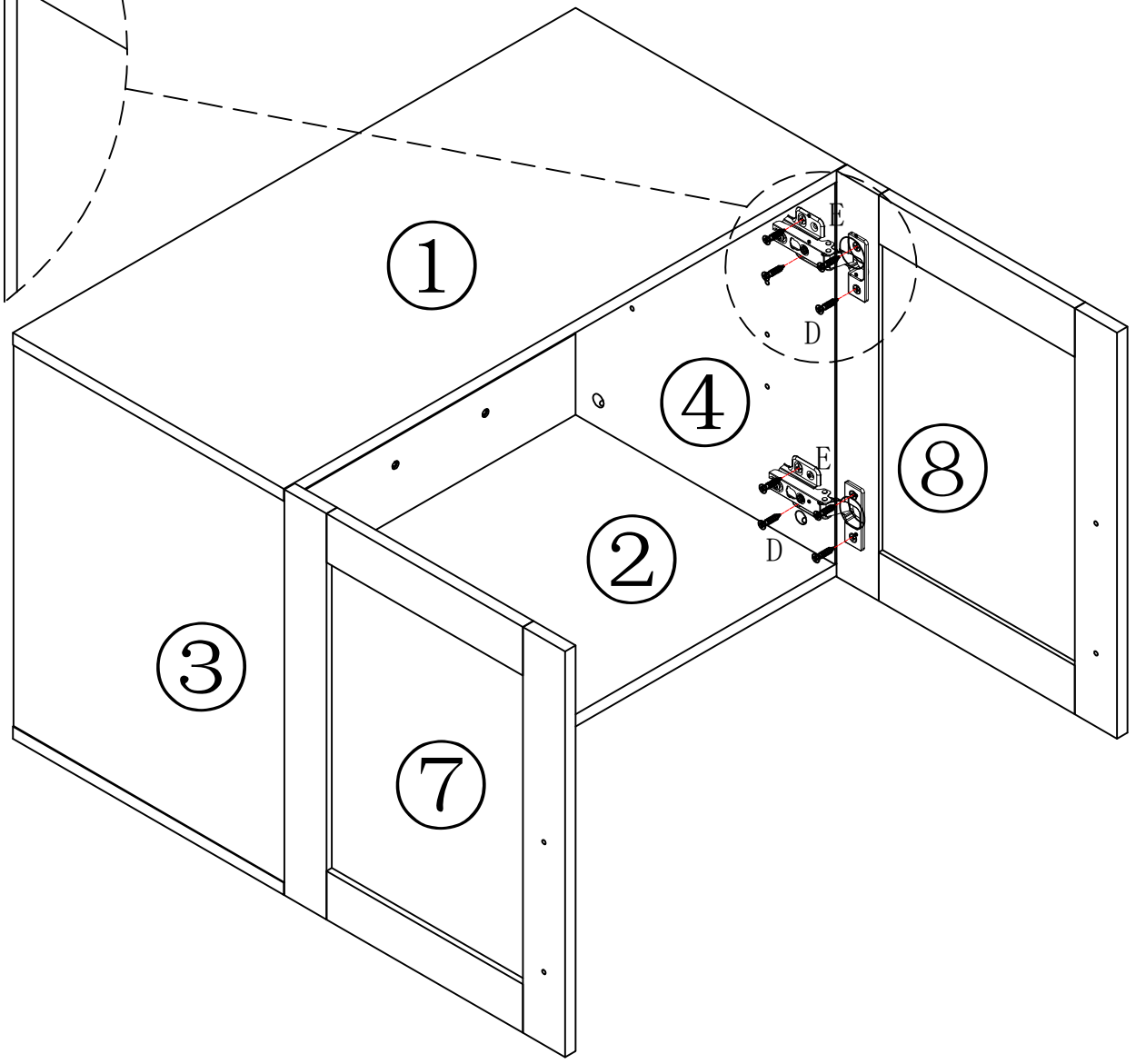

	D*16
	E*4

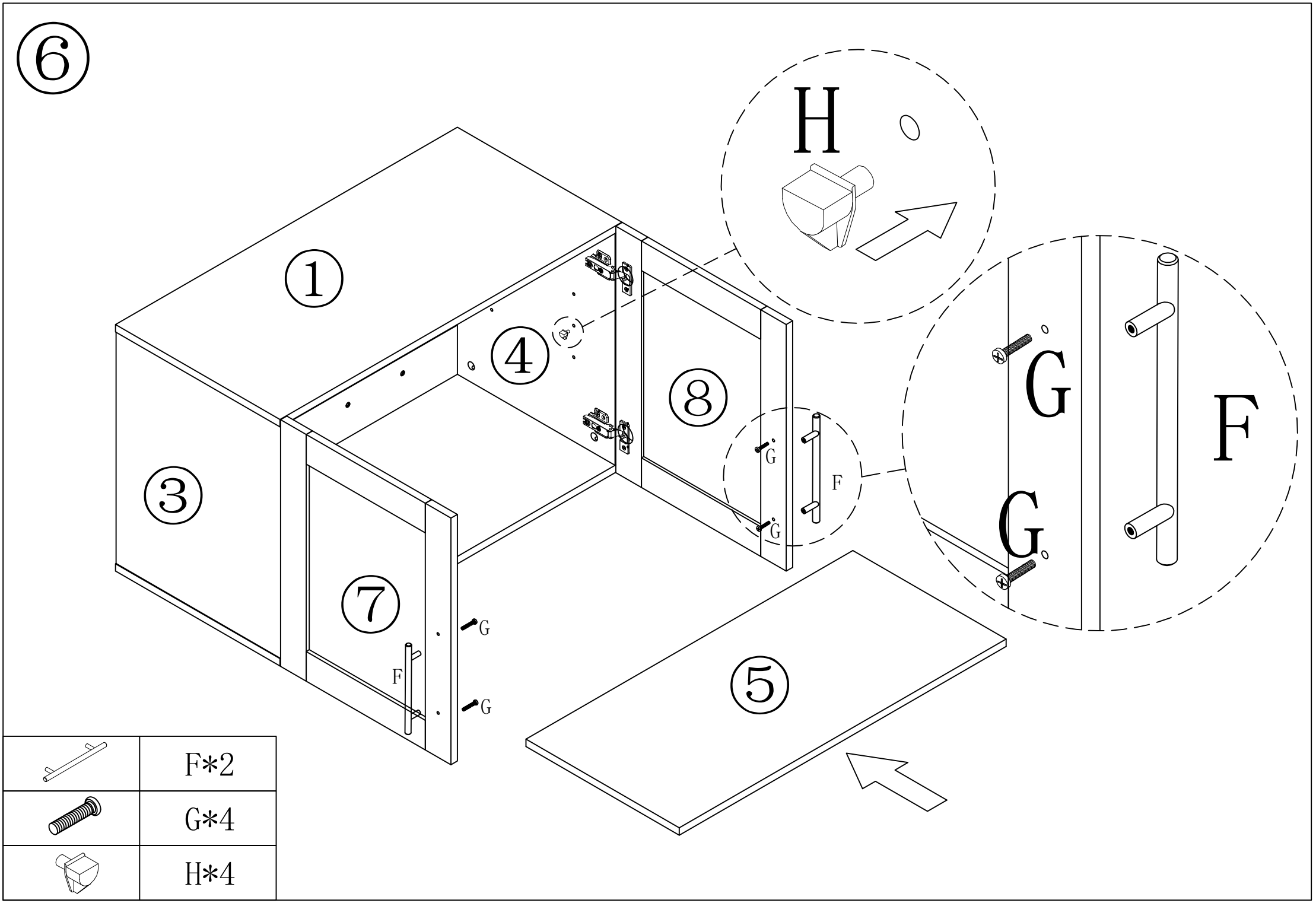

	F*2
	G*4
	H*4

7

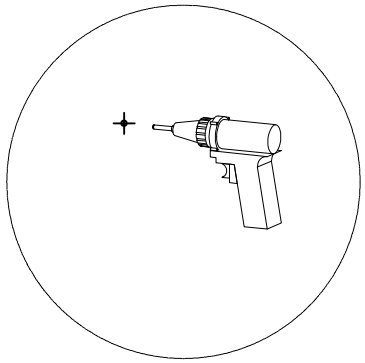

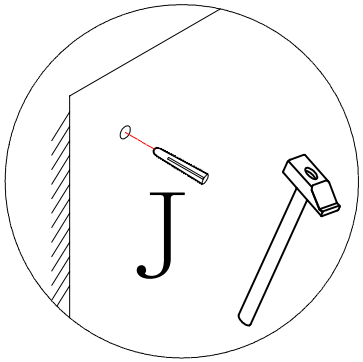

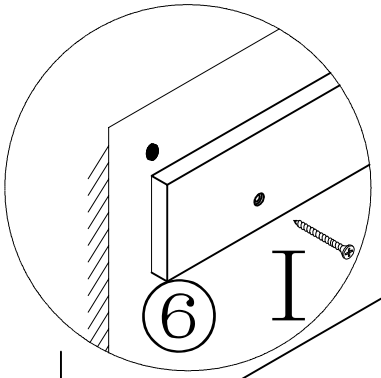

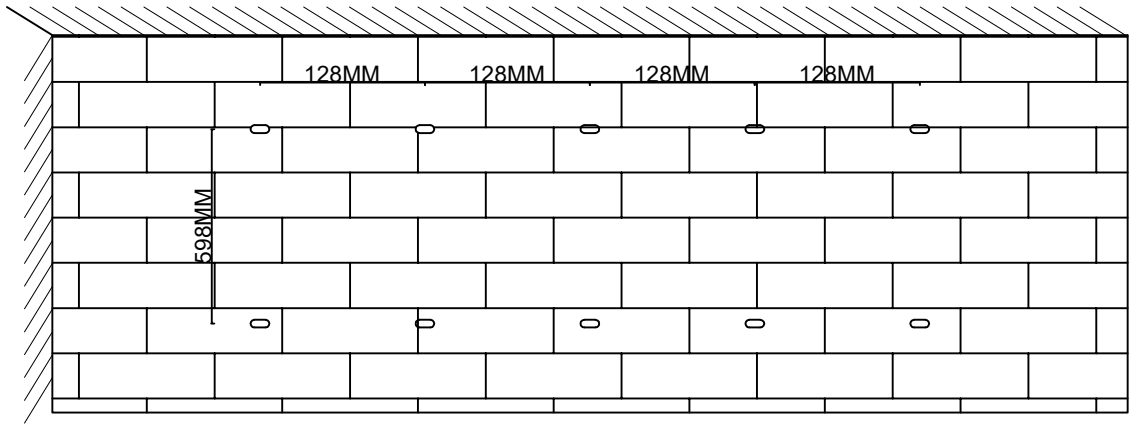

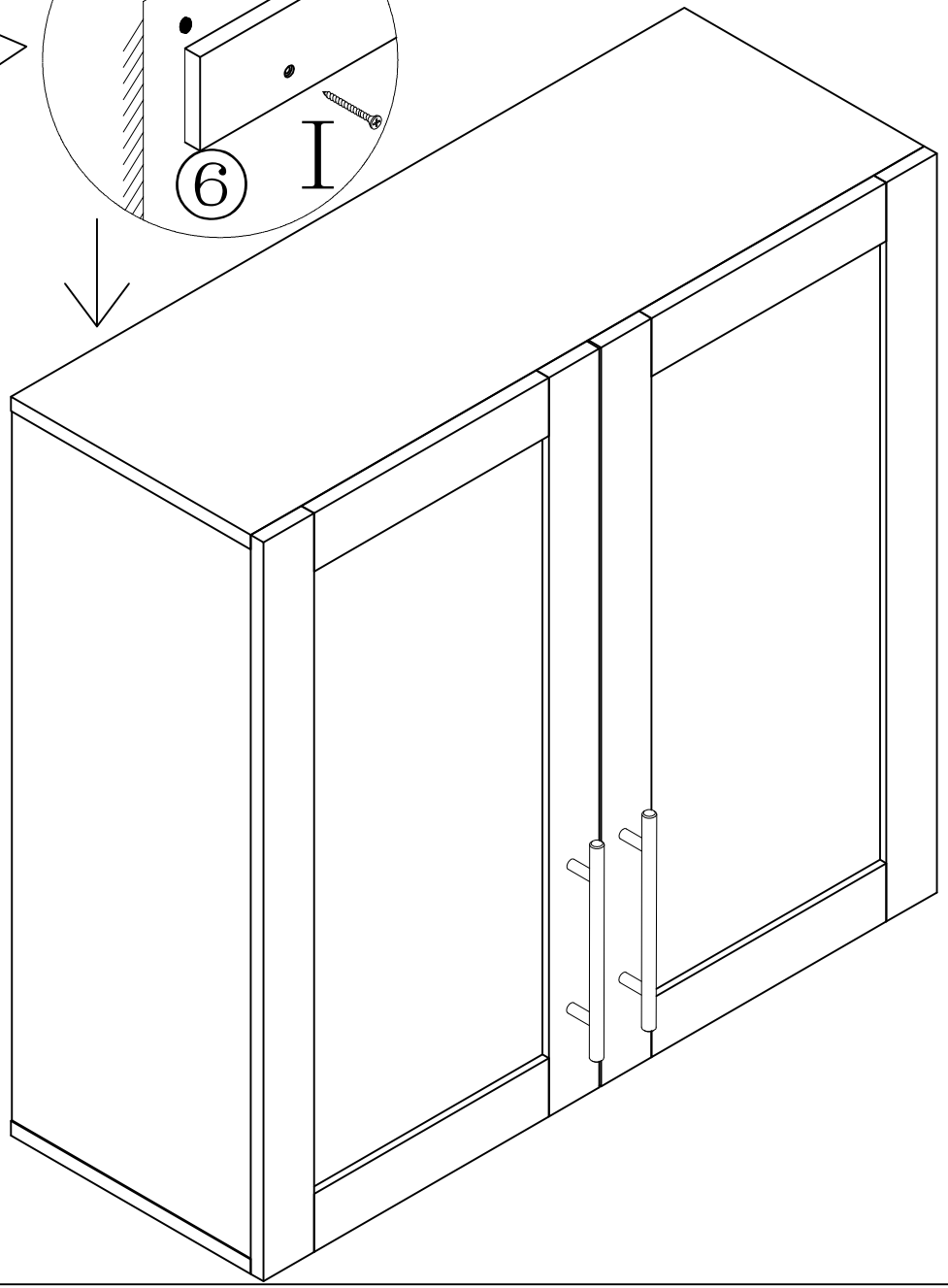

	I*10
	J*10

8

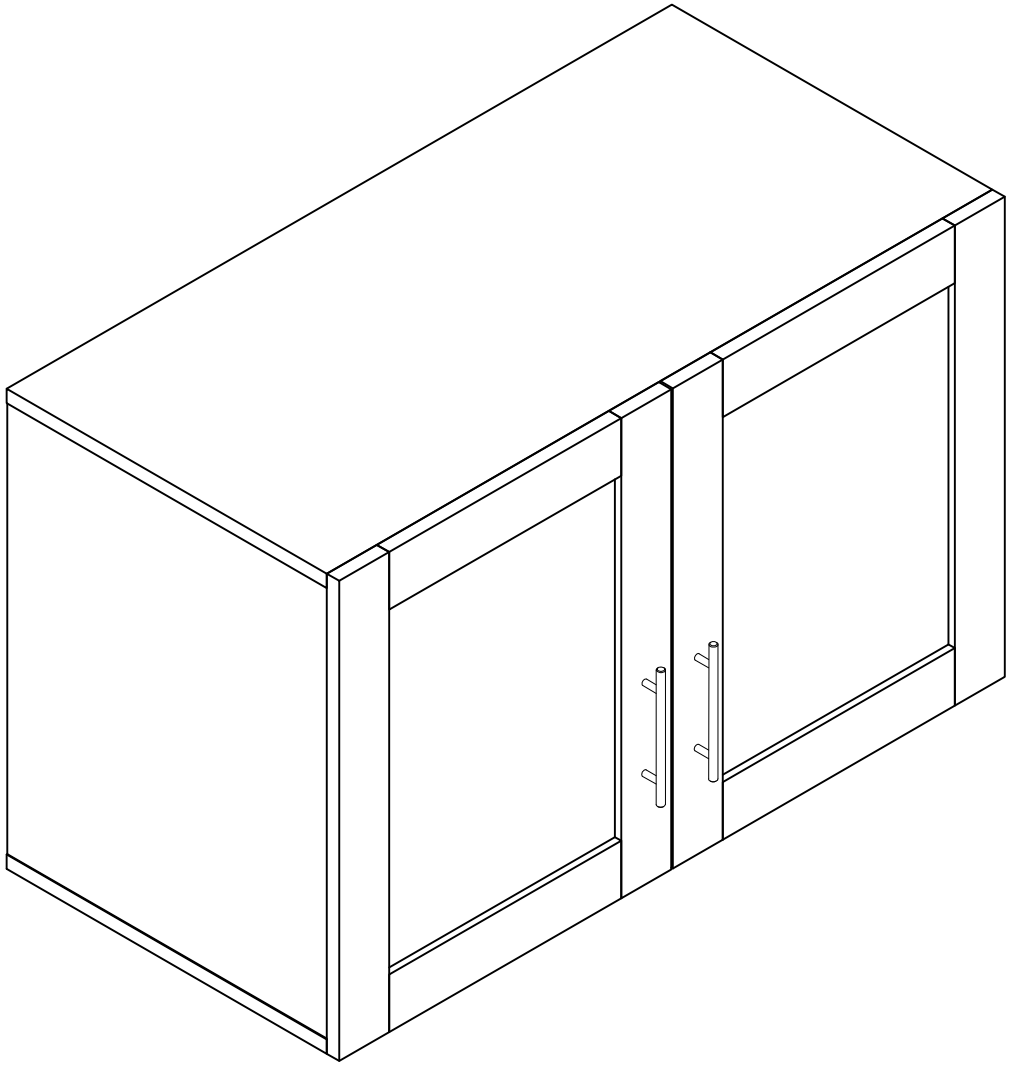

END