LACAVA

KUBISTA
vanity-top sink
H264BT

Specifications:

Installation:	direct vanity-top
Exterior Dimensions:	48”w x 21”d x 7”h
Interior Dimensions:	37 1/8”w x 13 1/8”d x 5”h
Depth to Overflow:	3”
Material:	Solid Surface
Weight:	64 lbs
Overflow:	Yes
Finishes:	001M - Matte White 001G – Gloss White
Faucet Holes:	00 – no holes 01 – 1 hole, center 02 – 2 hole, center and right, 4” spread 03 - 3 hole, 8” spread
Cutout Size:	40 1/2” x 19” (template available upon request)
Faucet Hole Size:	Ø 1 3/8”
Drain Hole Size:	Ø 1 7/8”

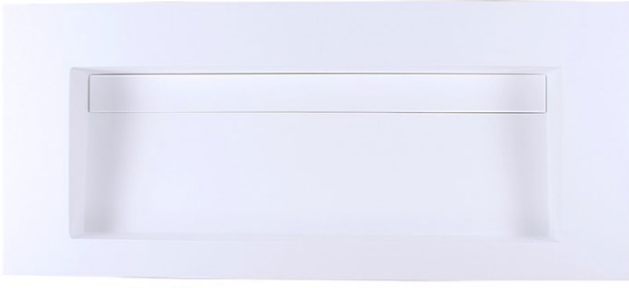

Features:

- Vanity-top installation, replaces countertop (vanity base should account for overhang)
- Full solid surface construction with overflow
- Decorative drain cover included (not shown)
- See technical documents for detail dimensions
- Cut-out template available upon request

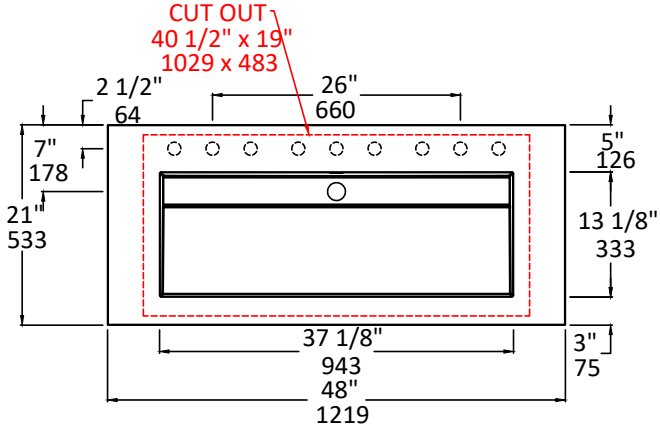

Codes + Standards:

- Meets and exceeds applicable national codes and standards

Recommended Items:

- KUB-W-48 - wall mount vanity with options
- BKS - 6" backsplash in matching finish(es)
- 71OO- 18OF - American grid drain with overflow

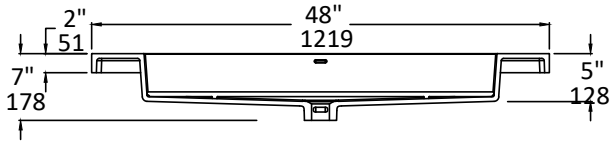

Care + Maintenance:

- To prevent damage to the solid surface material, hot objects and open flame should not be placed in direct contact with the surface

Click Here to find out more about proper care and maintenance

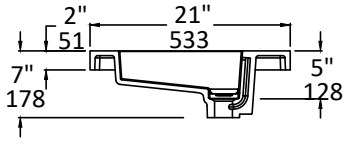

LACAVA reserves the right to revise any dimension or information on this sheet without notice. Dimensions are nominal and may vary within an industry accepted tolerance of 1/4”. Drawings provided herein are meant to give the user an idea of the product and are not made to scale.

Revised: 03/16/26