Product Installation Instructions

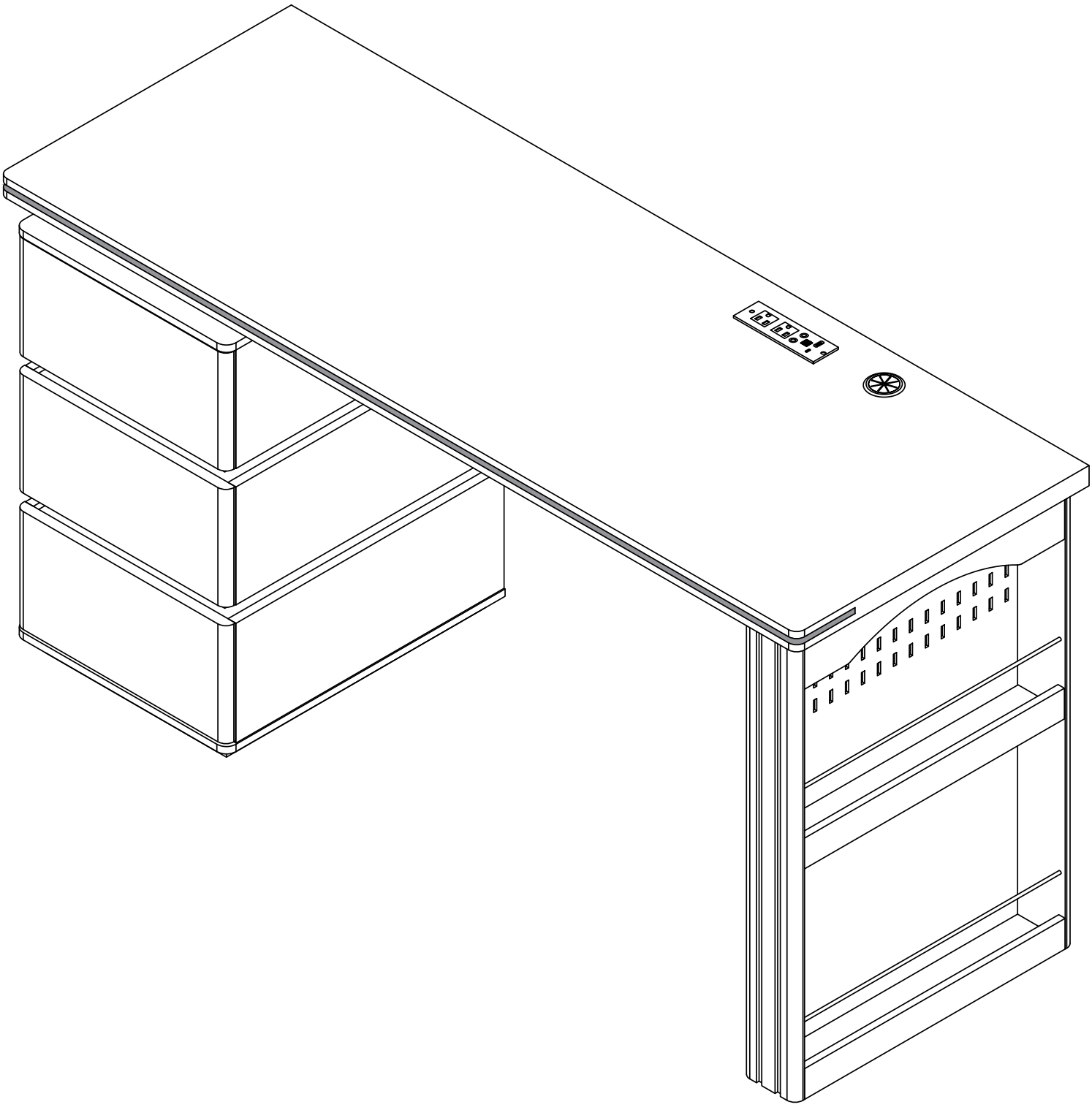

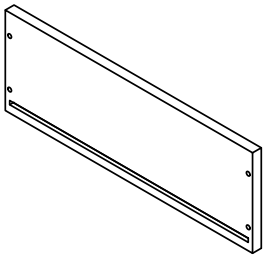

1x3

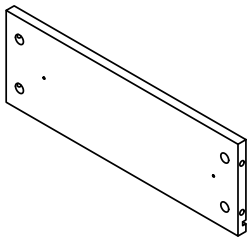

2x3

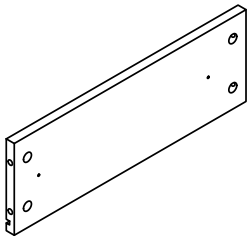

3x3

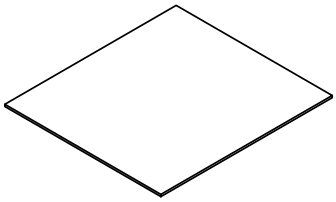

4x3

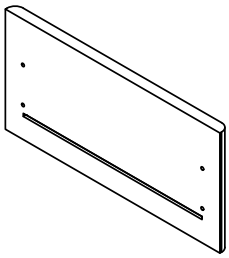

5x3

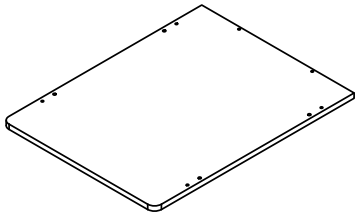

6x1

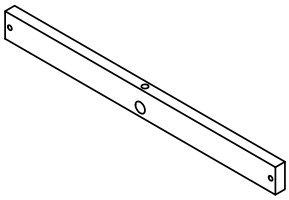

7x2

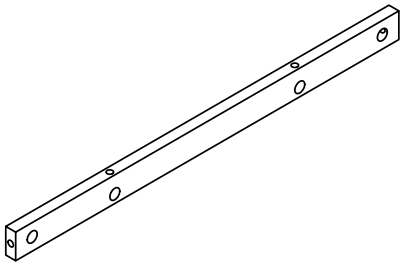

8x2

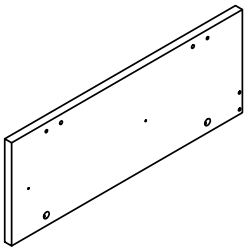

9x1

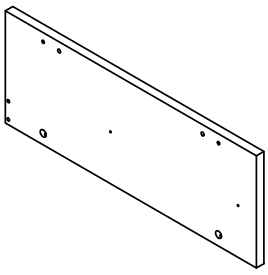

10x1

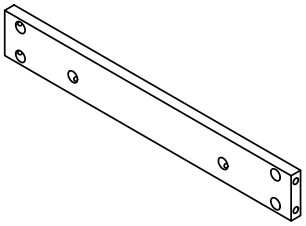

11x3

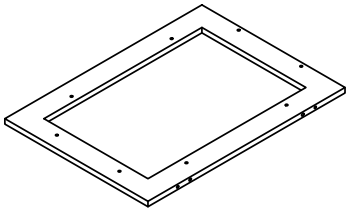

12x2

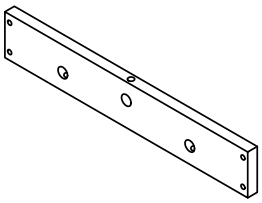

13x4

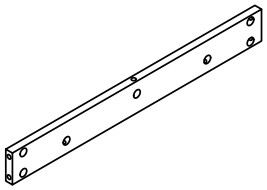

14x4

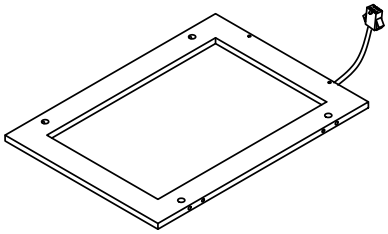

15x2

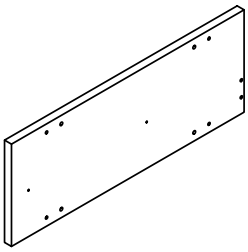

16x1

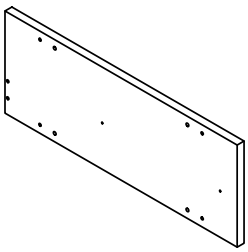

17x1

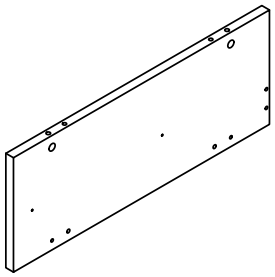

18x1

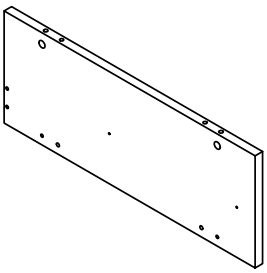

19x1

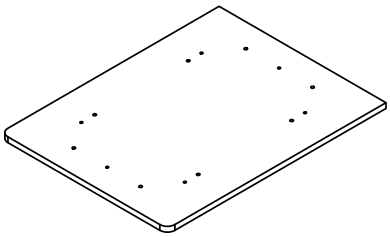

20x1

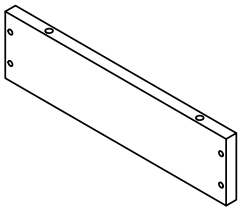

21x2

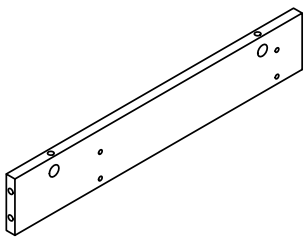

22x1

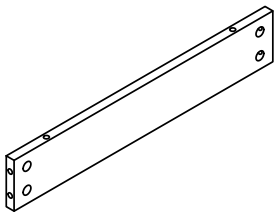

23x1



24x1



25x1

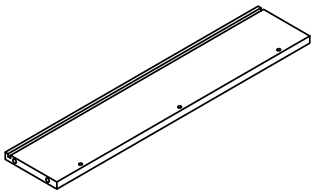

26x1

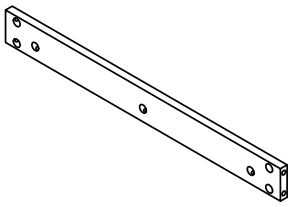

27x2

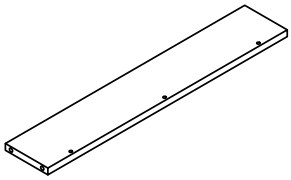

28x1

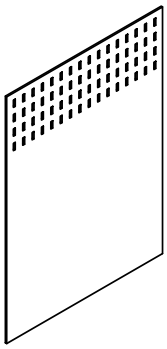

29x1

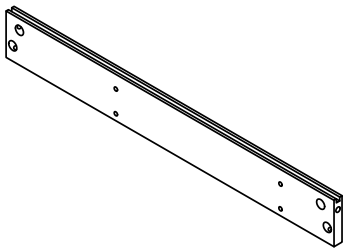

30x1

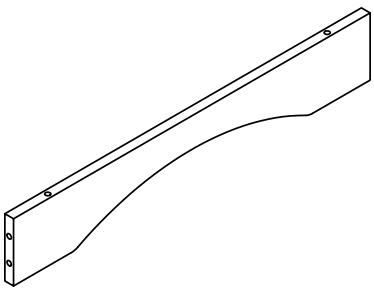

31x1

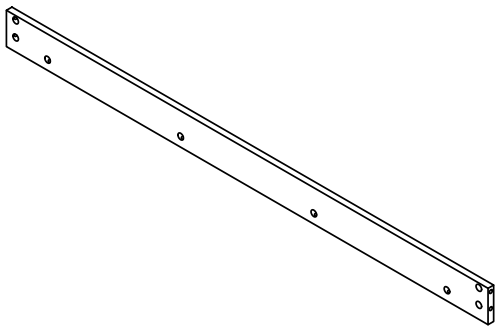

32x2

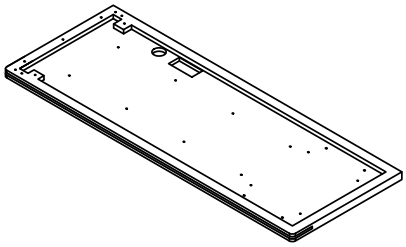

33x1

Accessories list

A	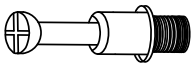	Two in one screw (6x28mm)	174pcs +12pcs
B		Two in one nut (10x12mm)	174pcs +12pcs
C	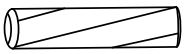	Wood chipping (6x30mm)	36pcs +4pcs
D		Non-slip pads (50x10)	10pcs +2pcs
E		Double end connecting line	3pcs
F	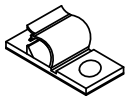	Wire clamp	4pcs +1pcs
G		Iron wire （506）	2pcs
H	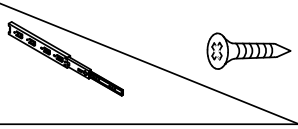	Guide & Screw(34cm) (3x12mm)	6pcs / 30pcs +6pcs
I	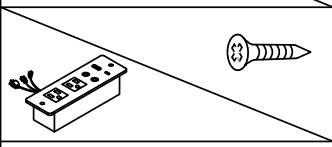	Power Socket & Screw (3x10mm)	1pcs / 2pcs +1pcs
J		Wire cover	1pcs

Double-head screwdriver, use as required

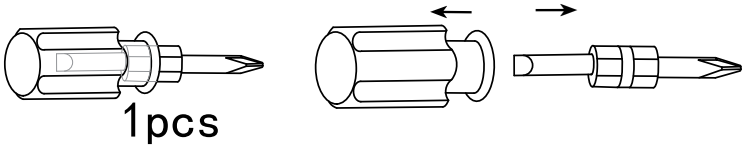

1pcs

Product structure decomposition

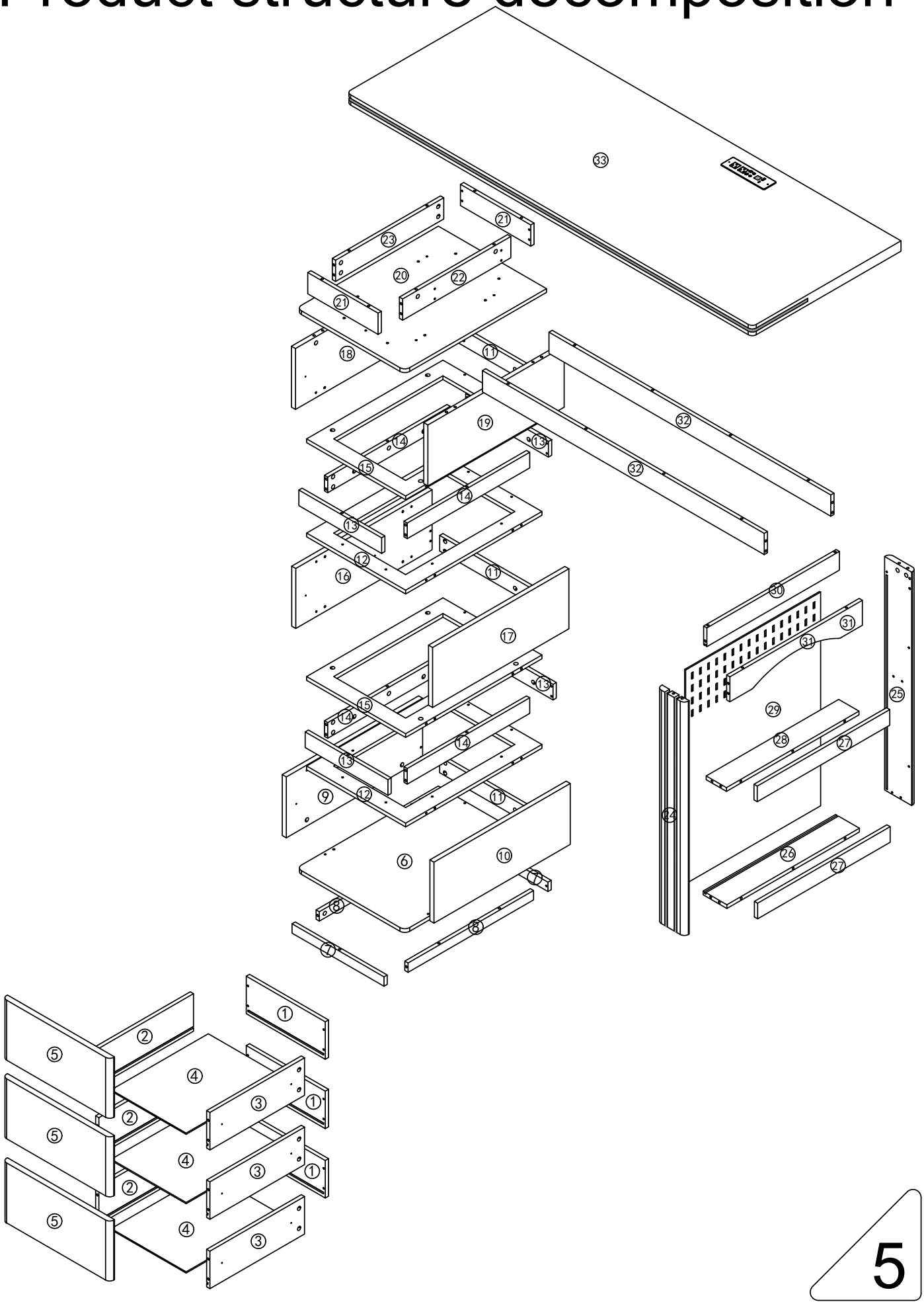

A		24pcs	B		24pcs	H	6pcs	12pcs

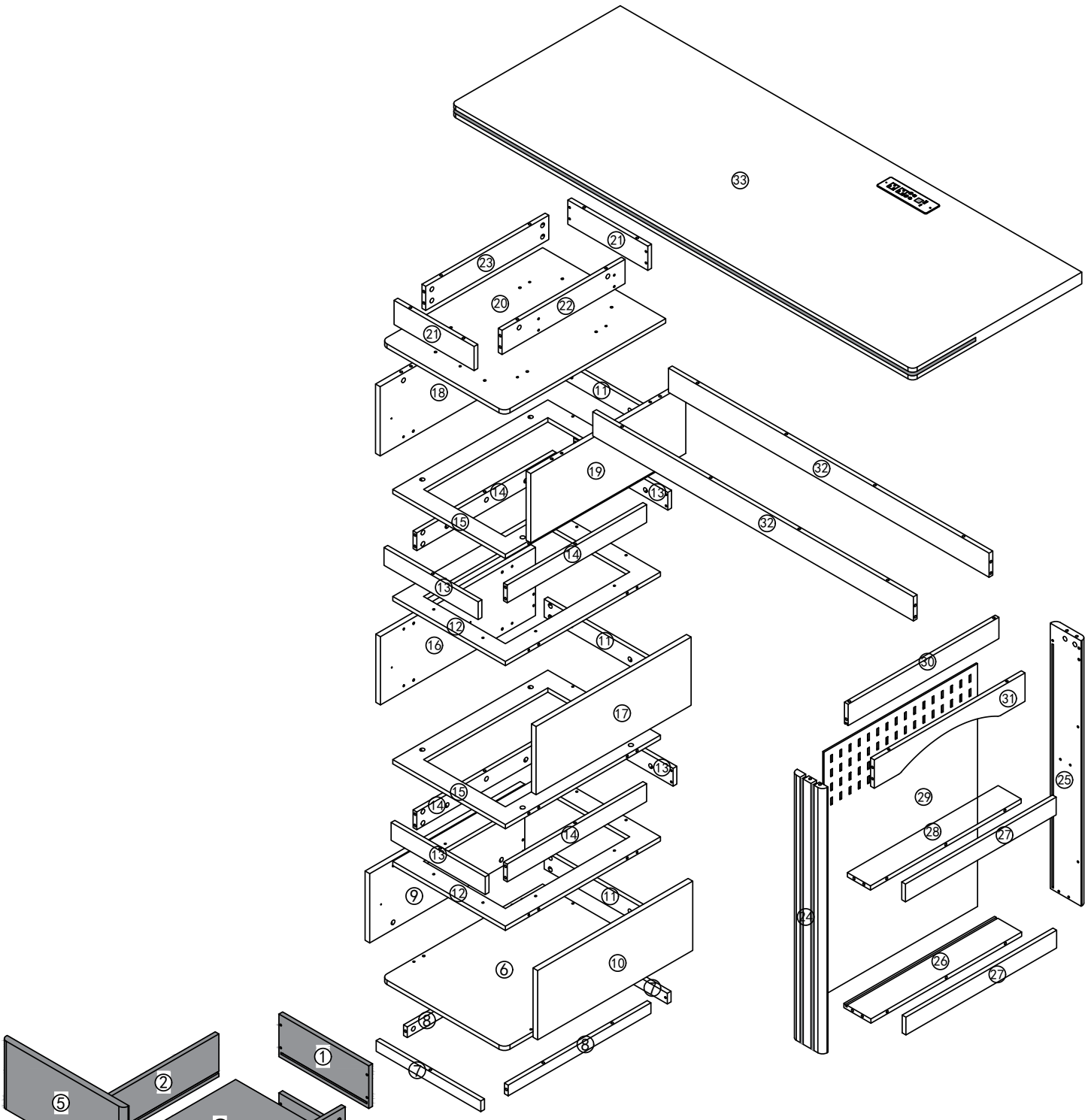

Use parts A and B

Step1

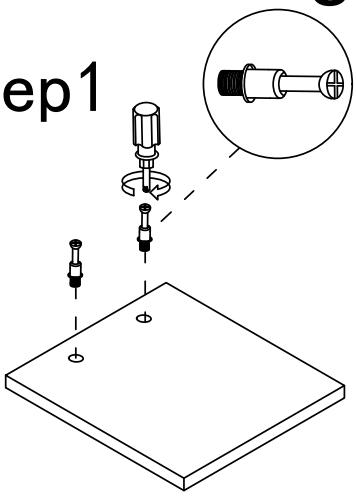

Step2

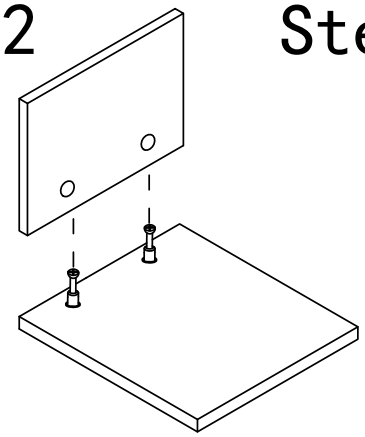

Step3

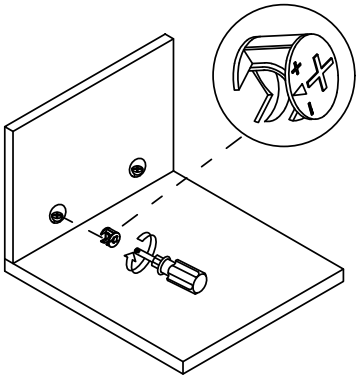

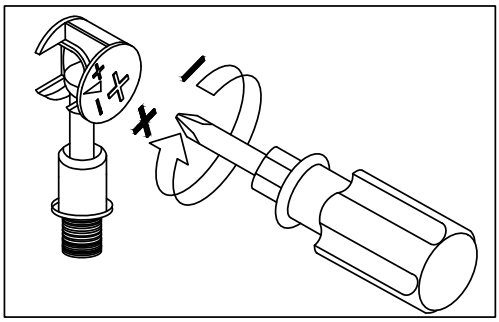

Use a screwdriver to lock in the direction of the "+" sign

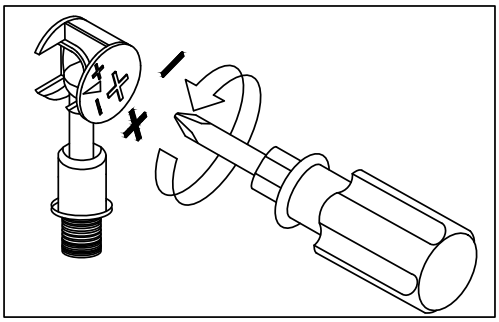

Disassemble along the direction of "-" sign

Step 1

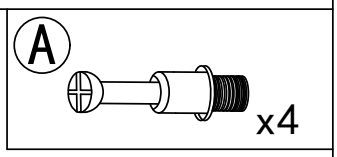

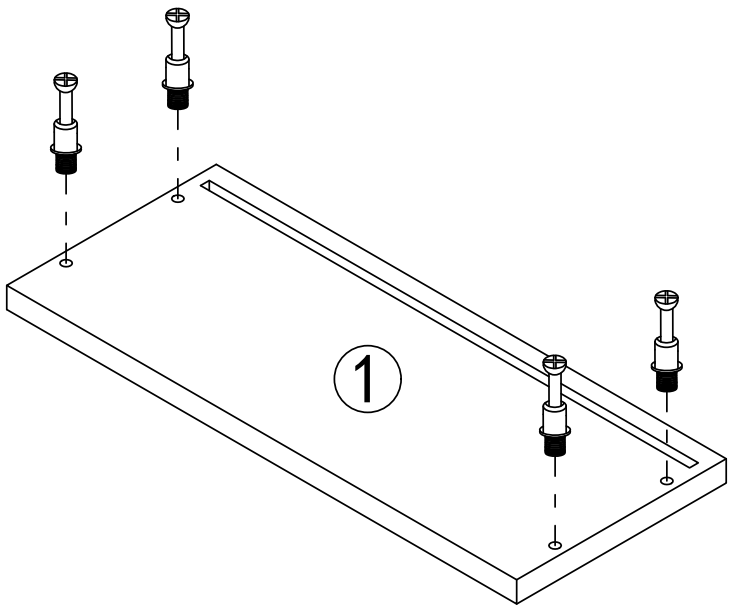

Step 2

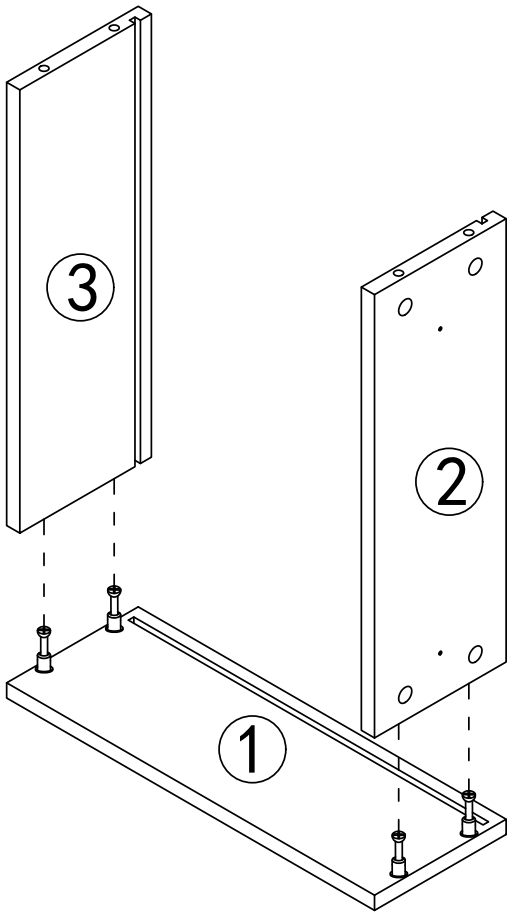

Step 3

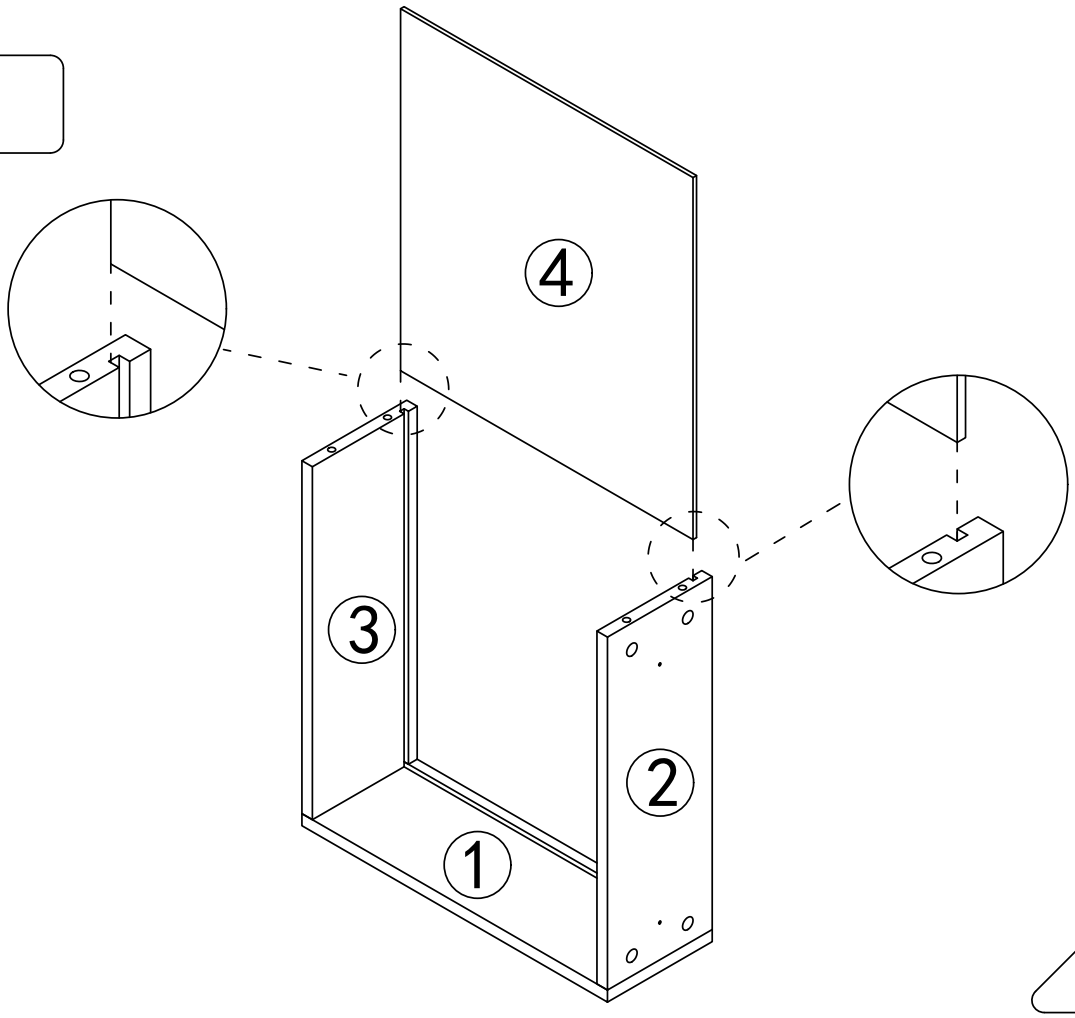

Step 4

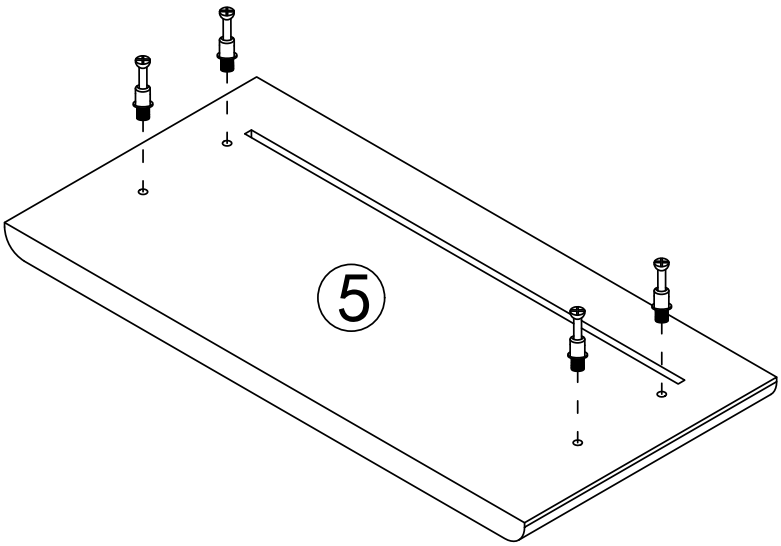

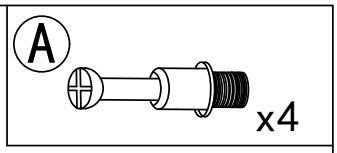

Step 5

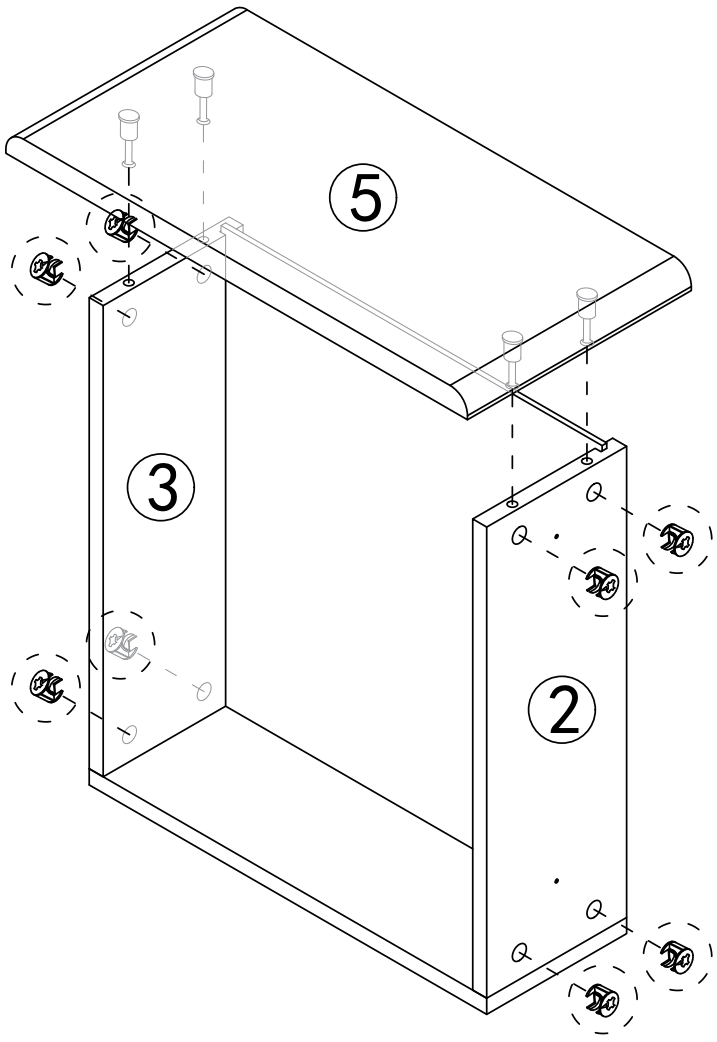

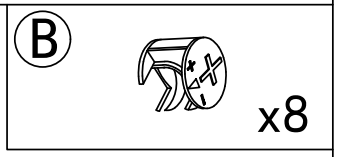

Drawer rail breakdown diagram

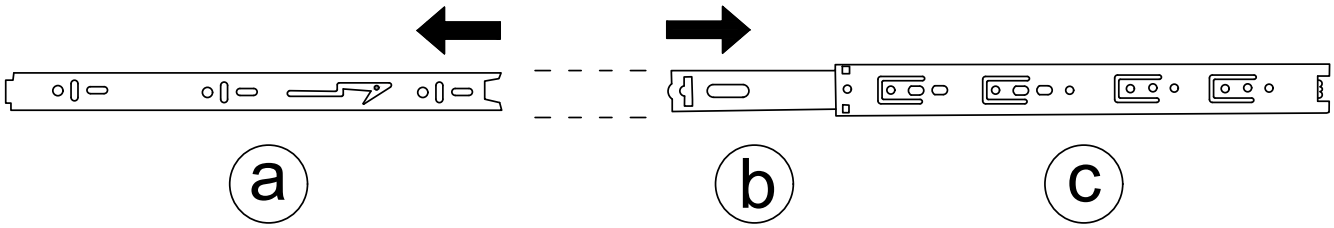

① Dismantle the schematic diagram

Step 1 : Pull the rails apart

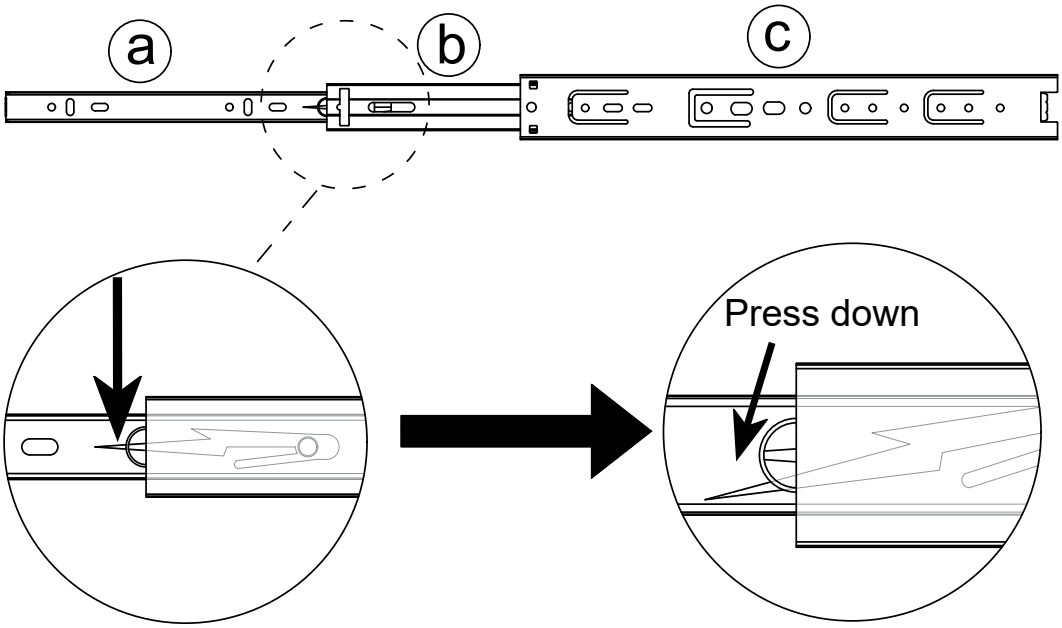

Step 2 : Press the nylon button and pull out ⓐ.

Drawer rail decomposition completed schematic diagram

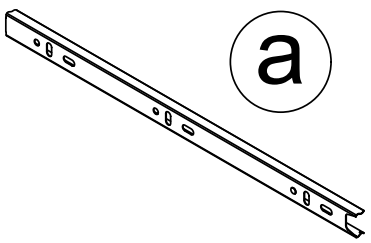

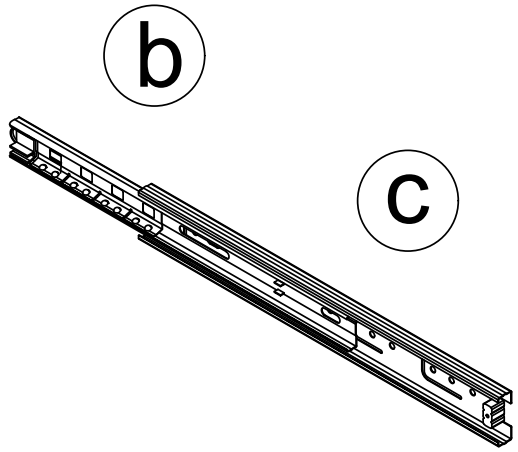

Step 6

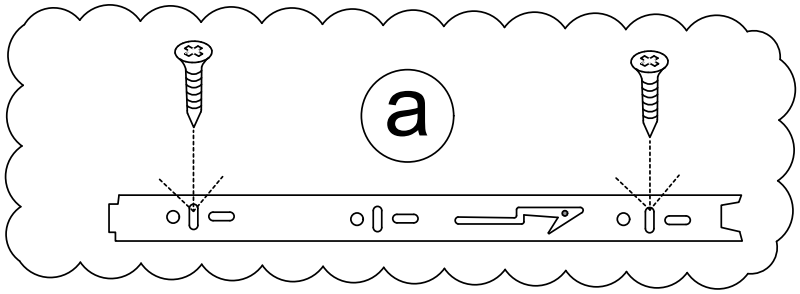

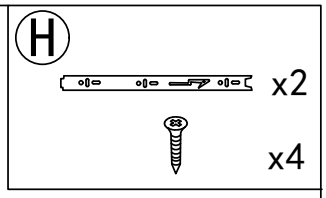

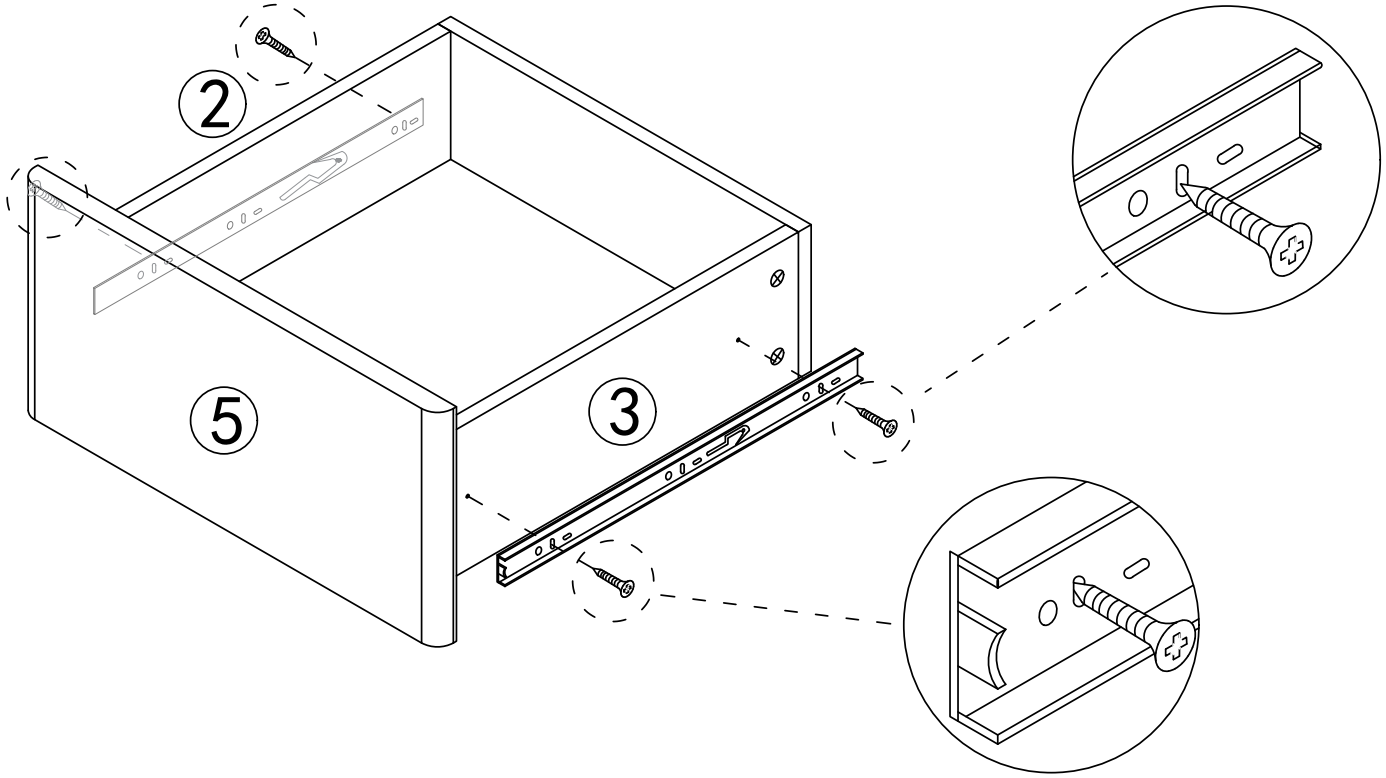

Step 7

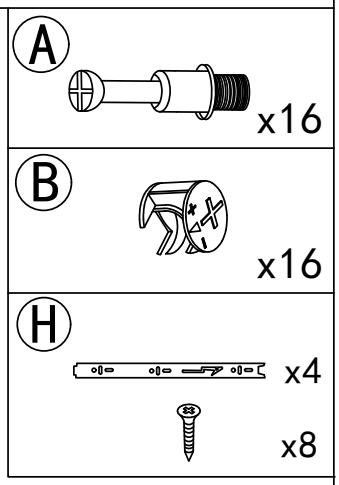

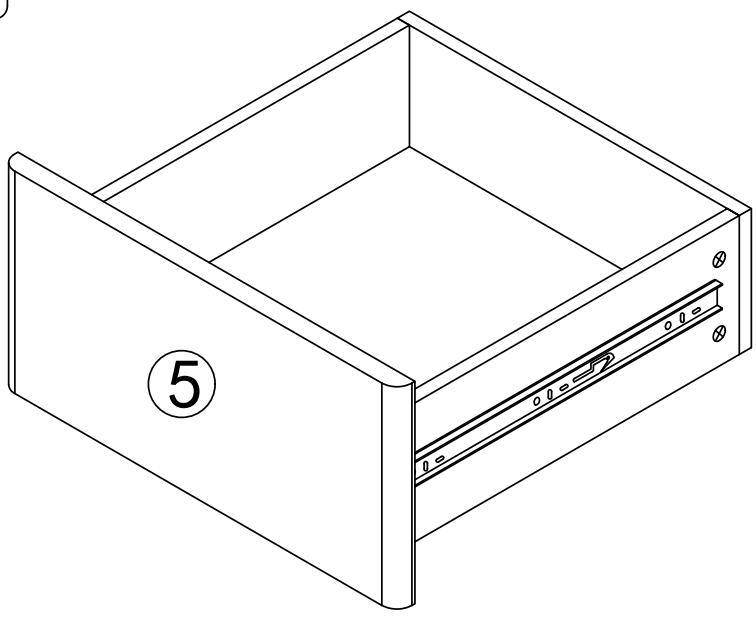

x3

Repeat the drawer installation steps.

A	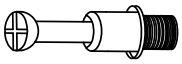	150pcs	B		150pcs	C	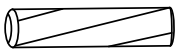	36pcs
D	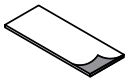	10pcs	E		3pcs	F	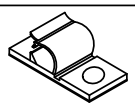	4pcs
G		2pcs	H	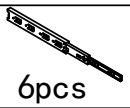 6pcs  18pcs		I	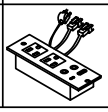 x1  x2	
J		1pcs						

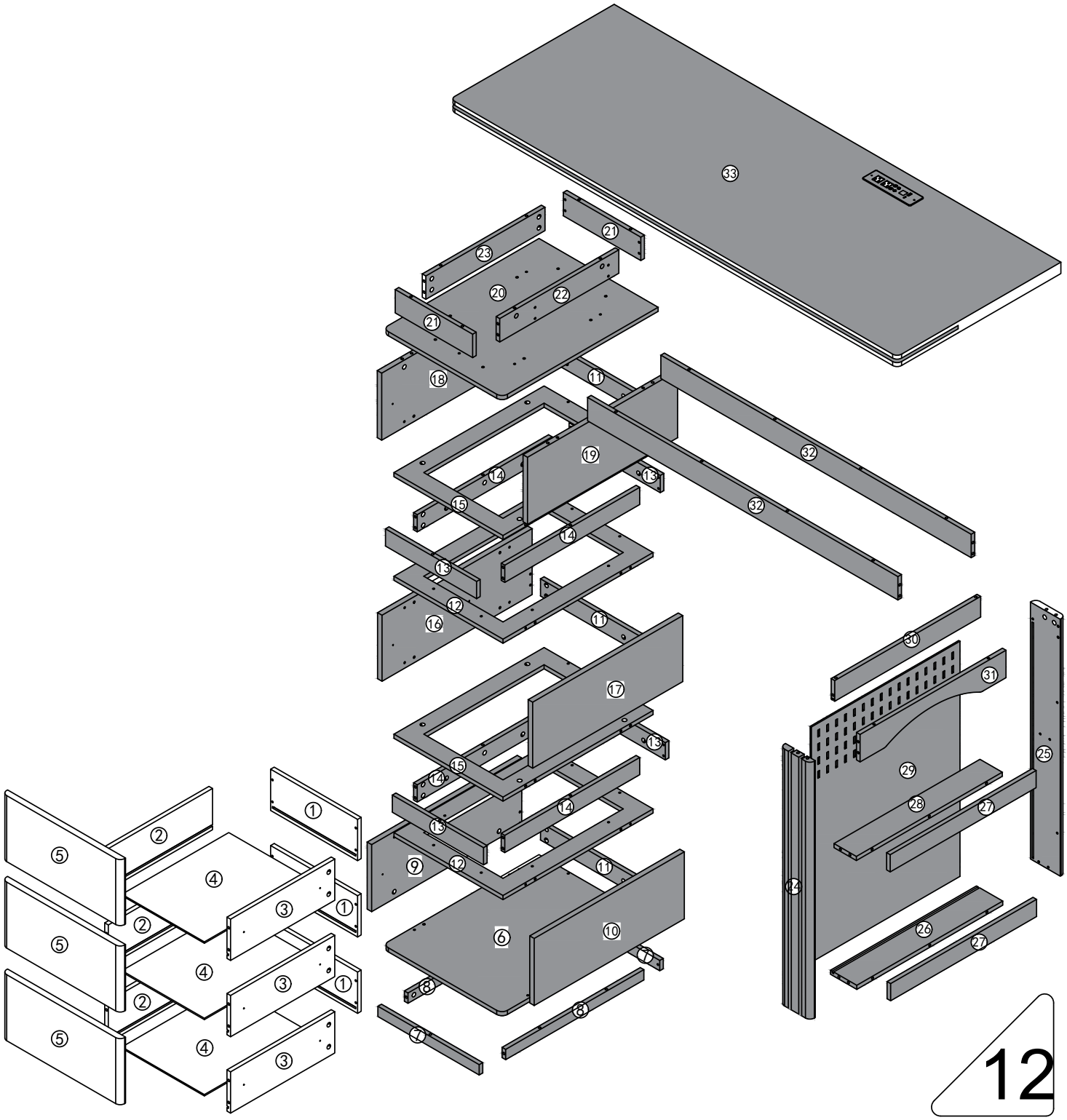

Step 8

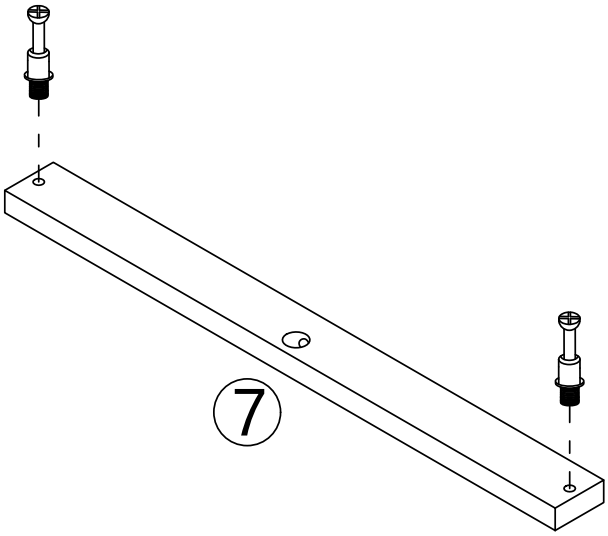

x2

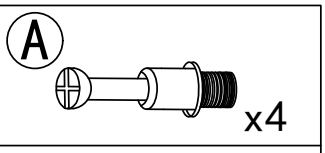

Step 9

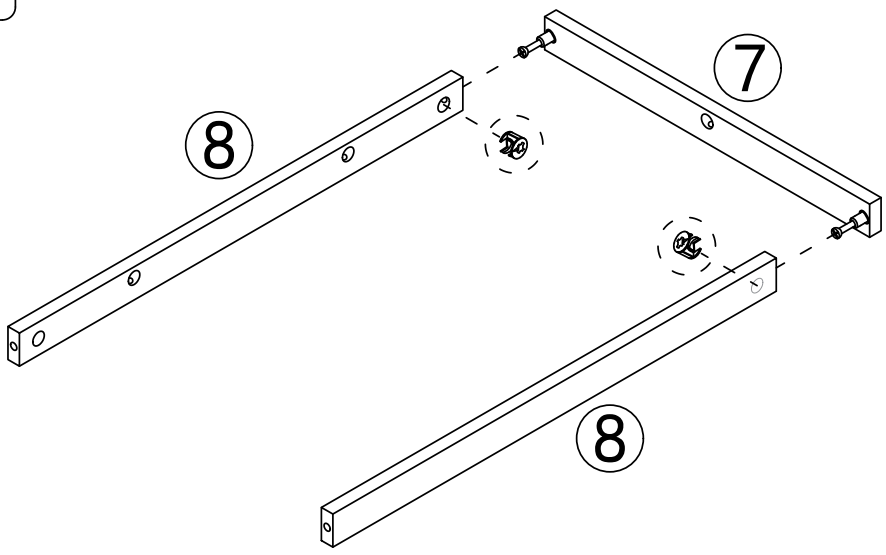

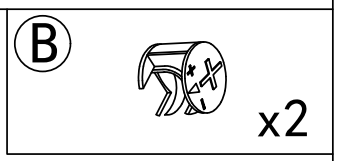

Note: The holes on the side of the board are all facing down.

B x2

Step 10

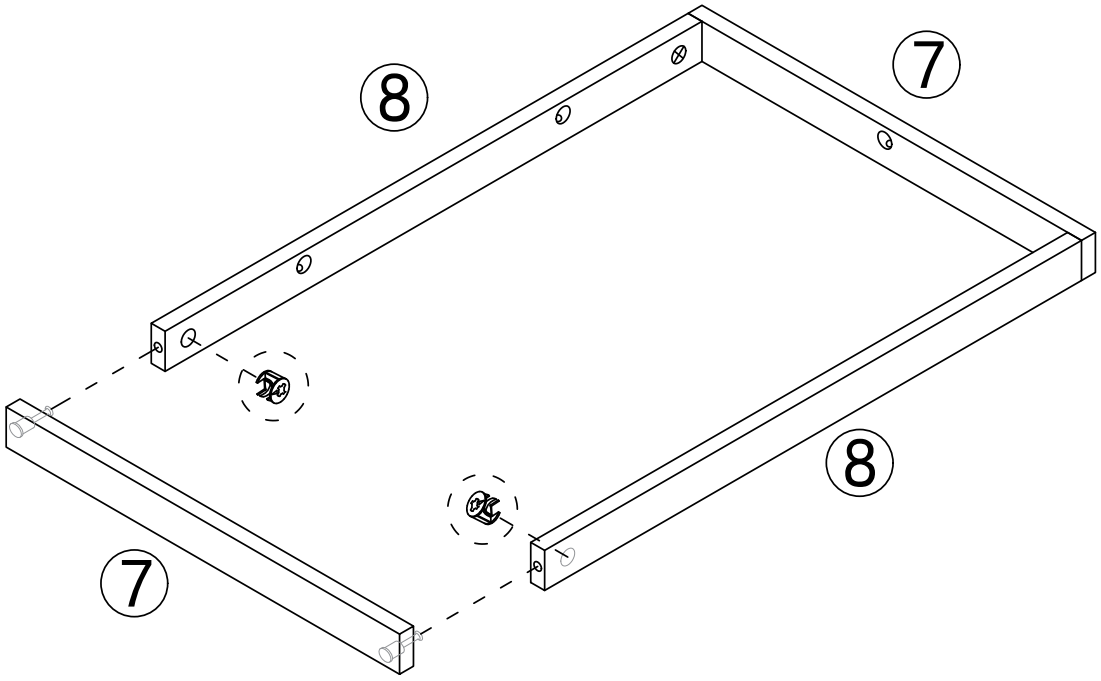

A x6

Step 11

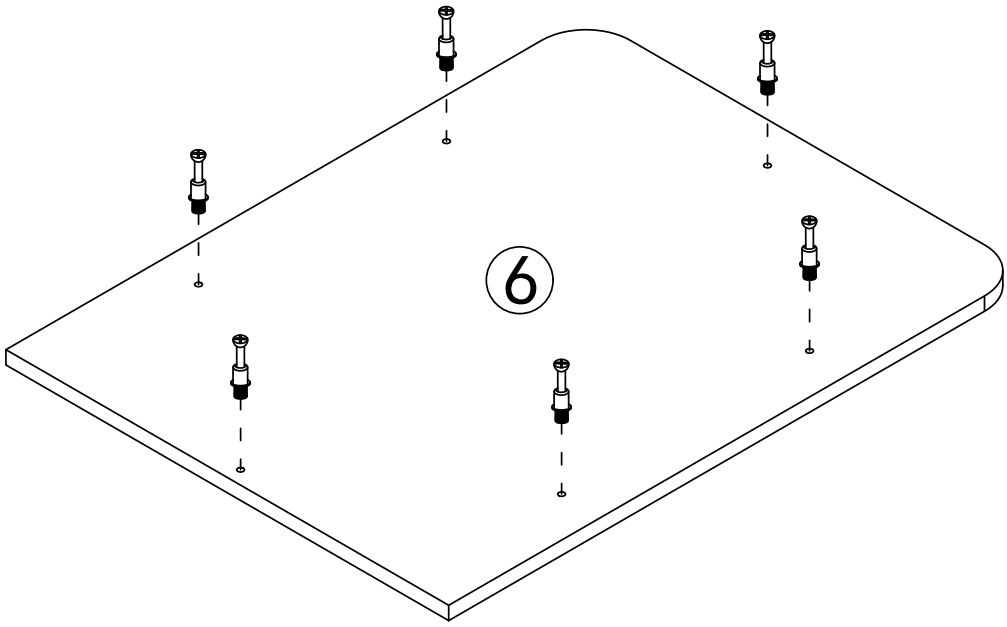

Step 12

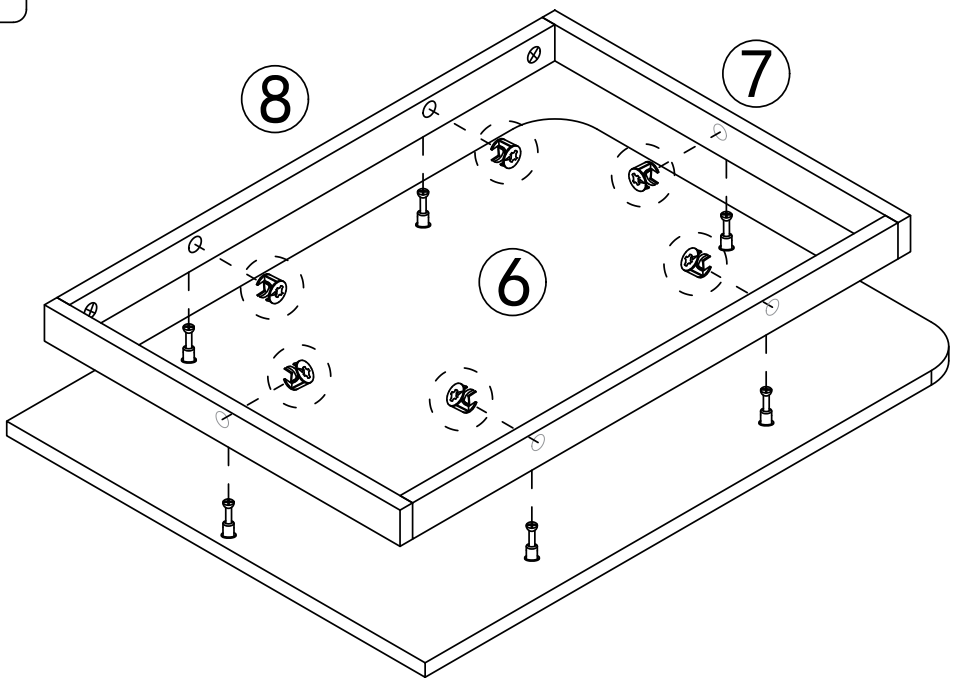

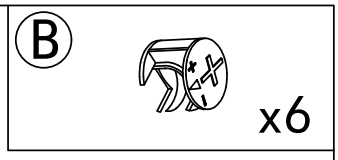

Step 13

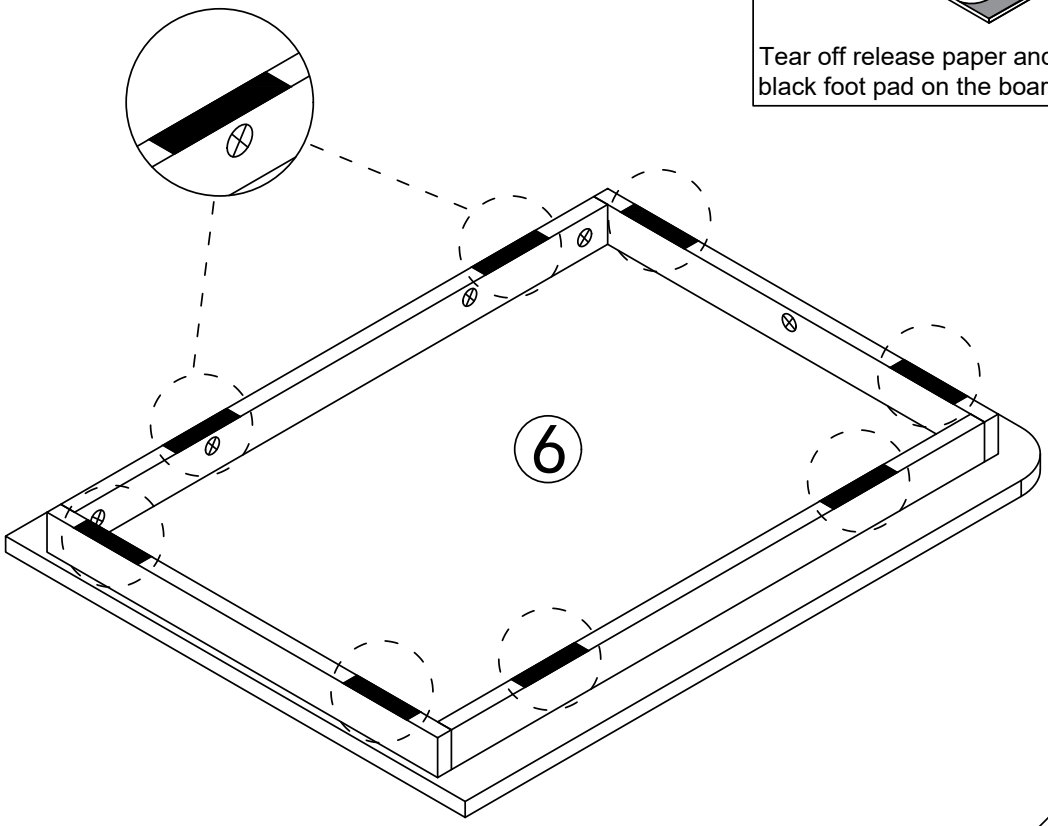

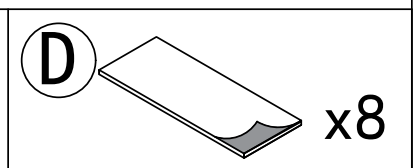

Tear off release paper and stick the black foot pad on the board

Step 14

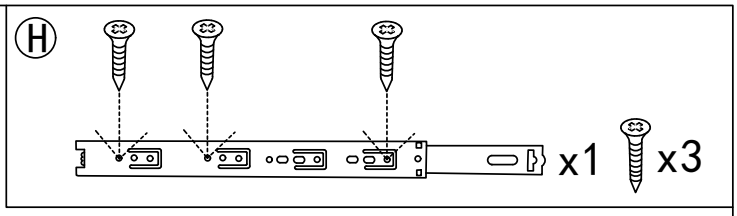

This hole is for strengthening fixed hole customers can choose to install according to their needs.

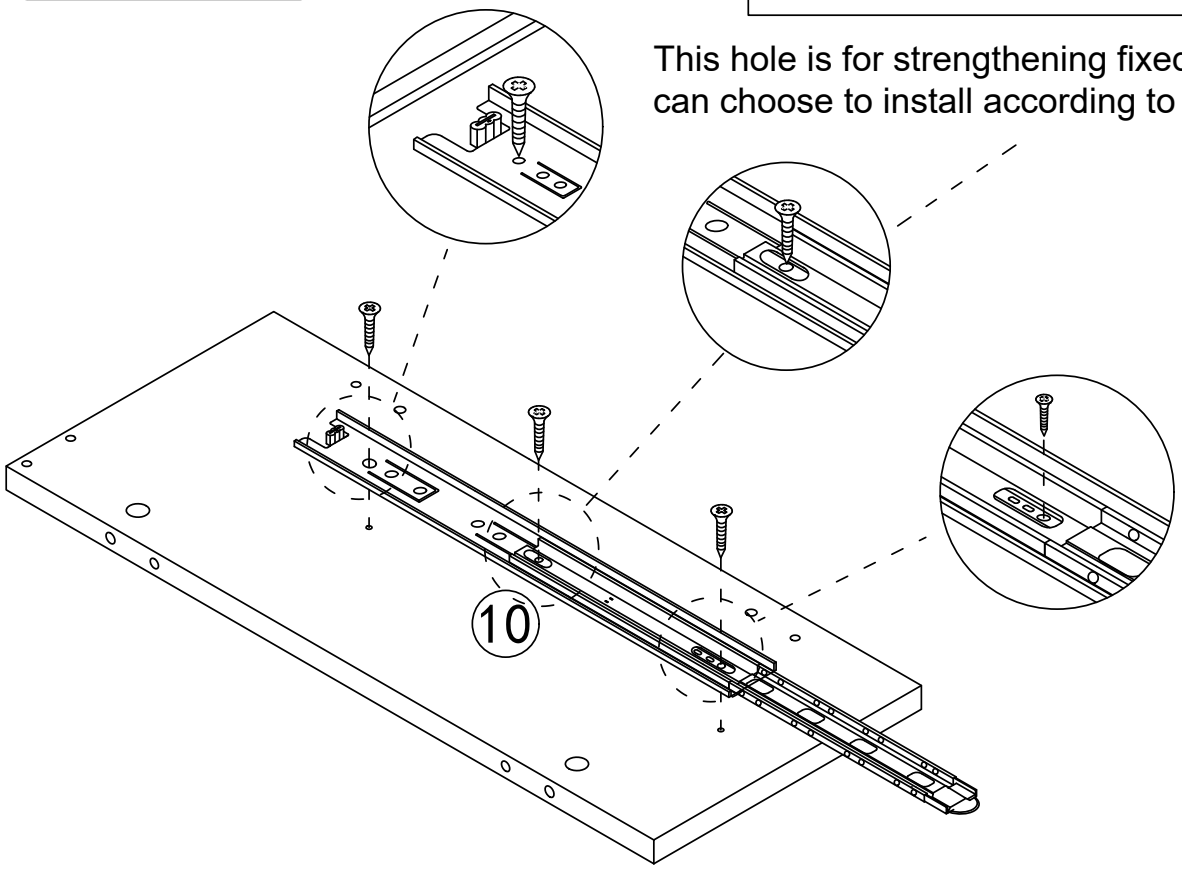

Step 15

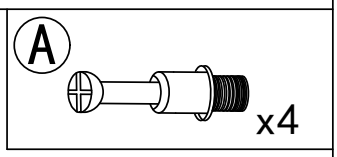

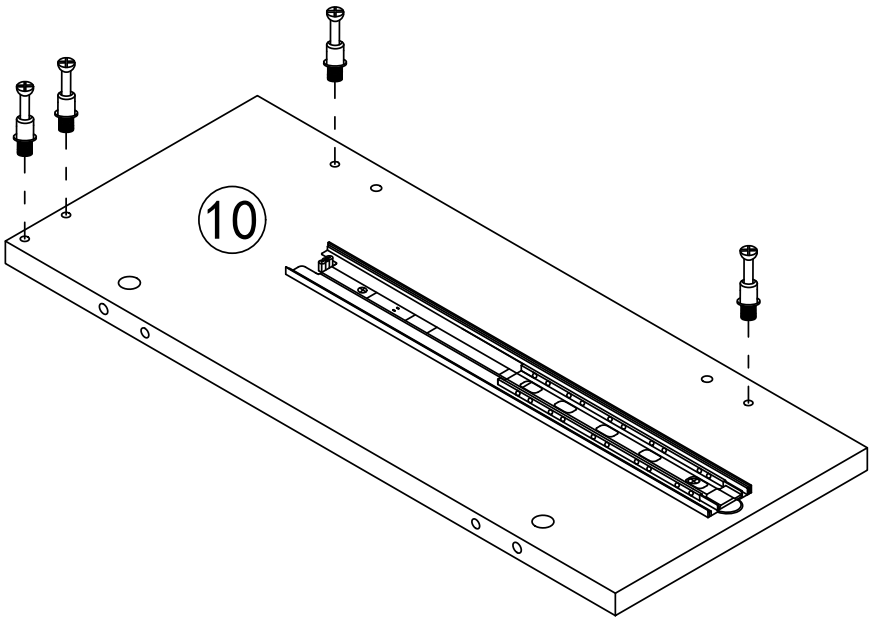

Step 16

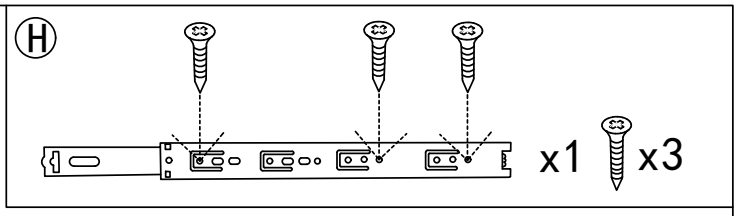

This hole is for strengthening fixed hole customers can choose to install according to their needs.

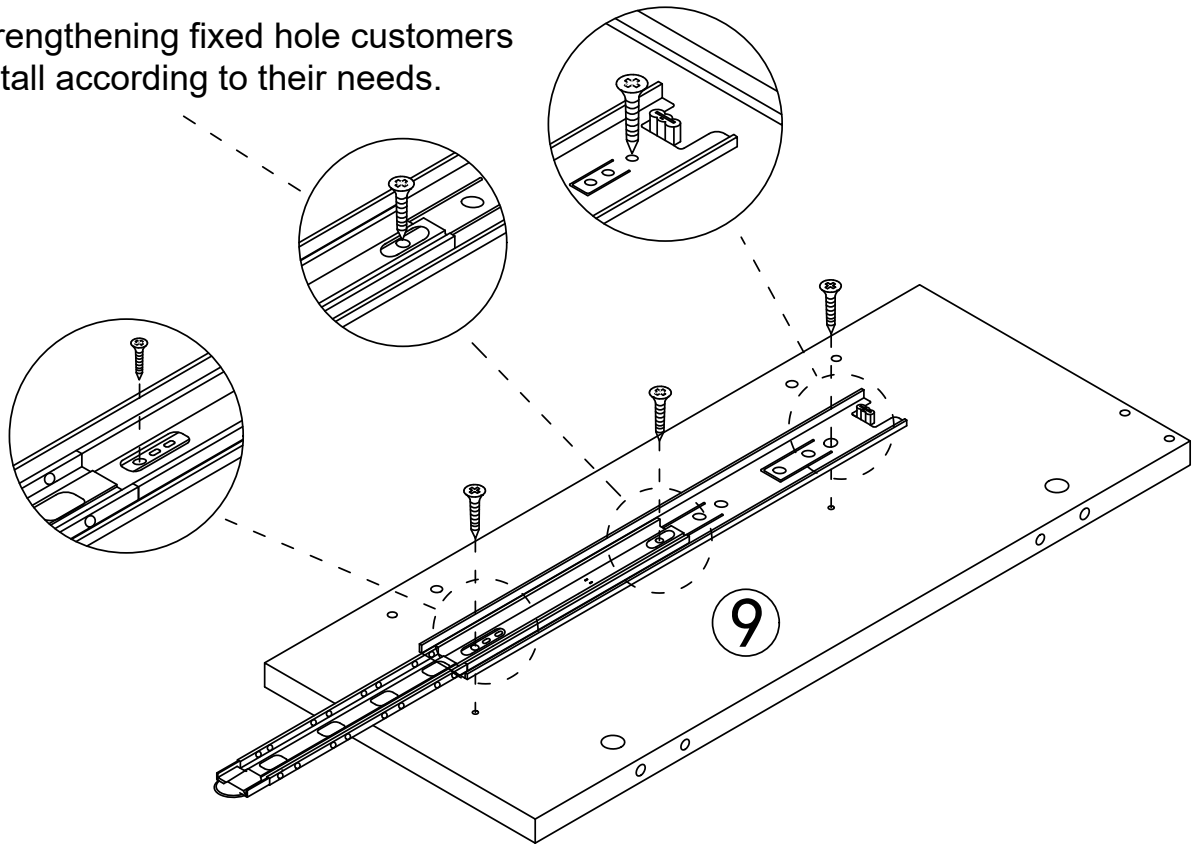

Step 17

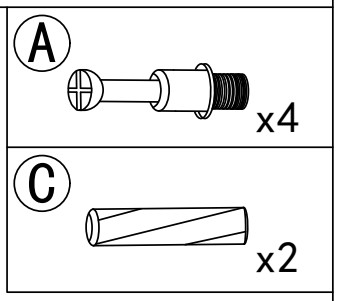

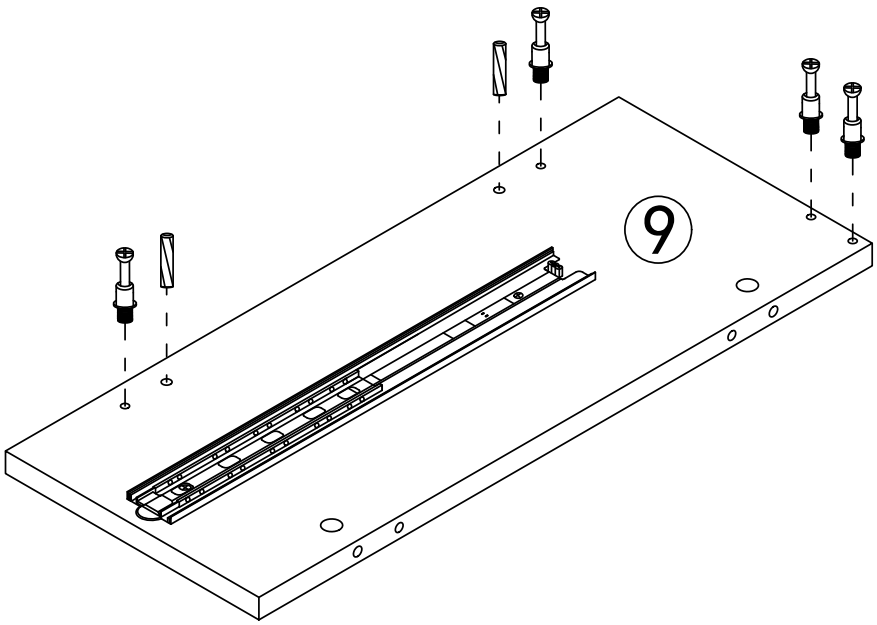

B x2

Step 18

When installing Panel 12, note that the upper holes are set back; align the holes correctly to avoid wrong assembly.

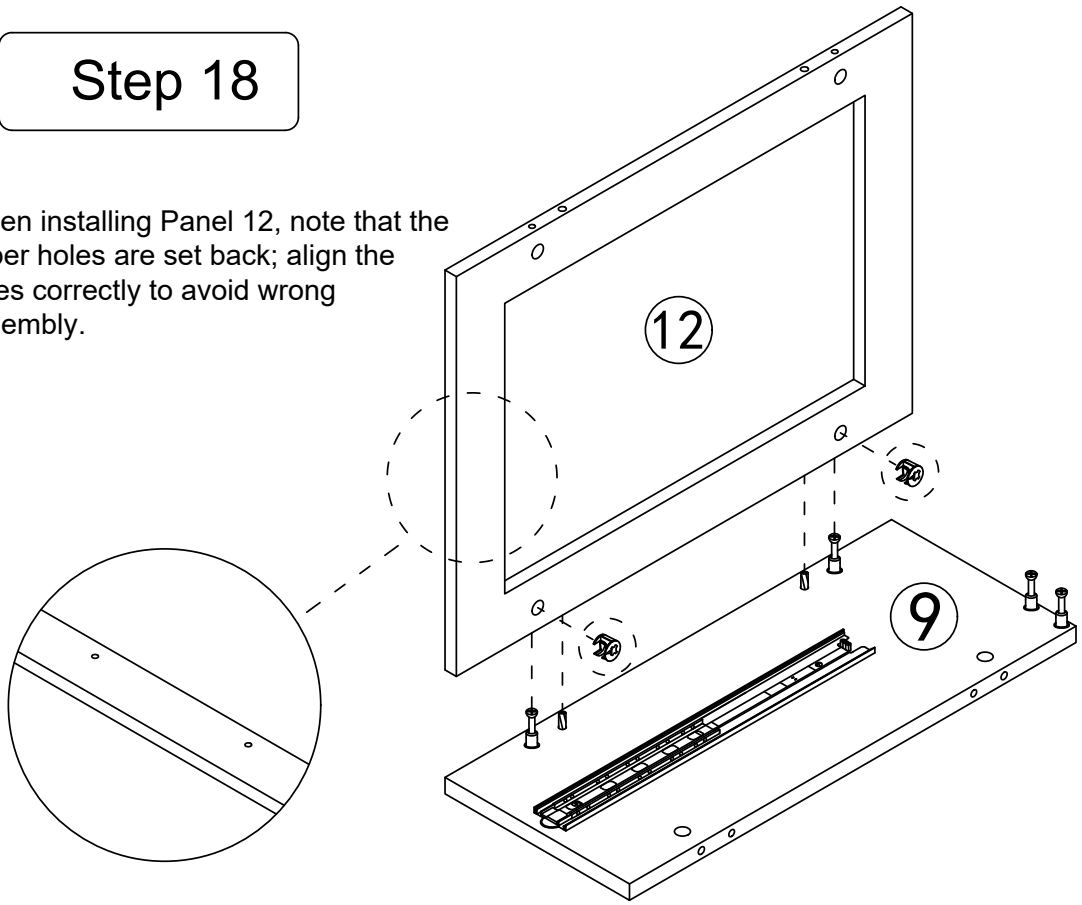

B x2

Step 19

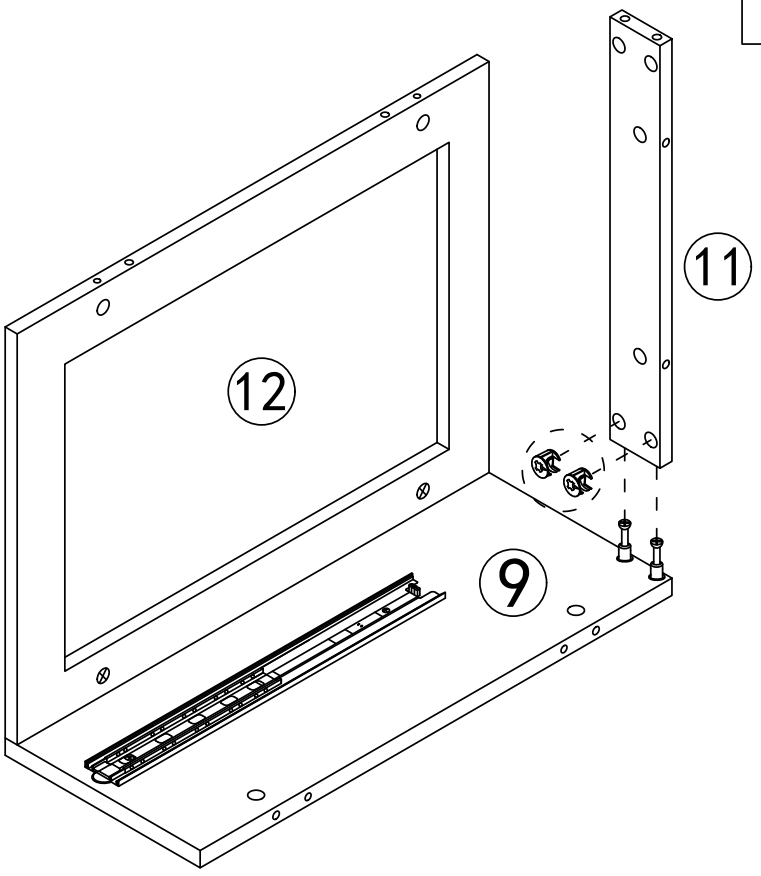

Step 20

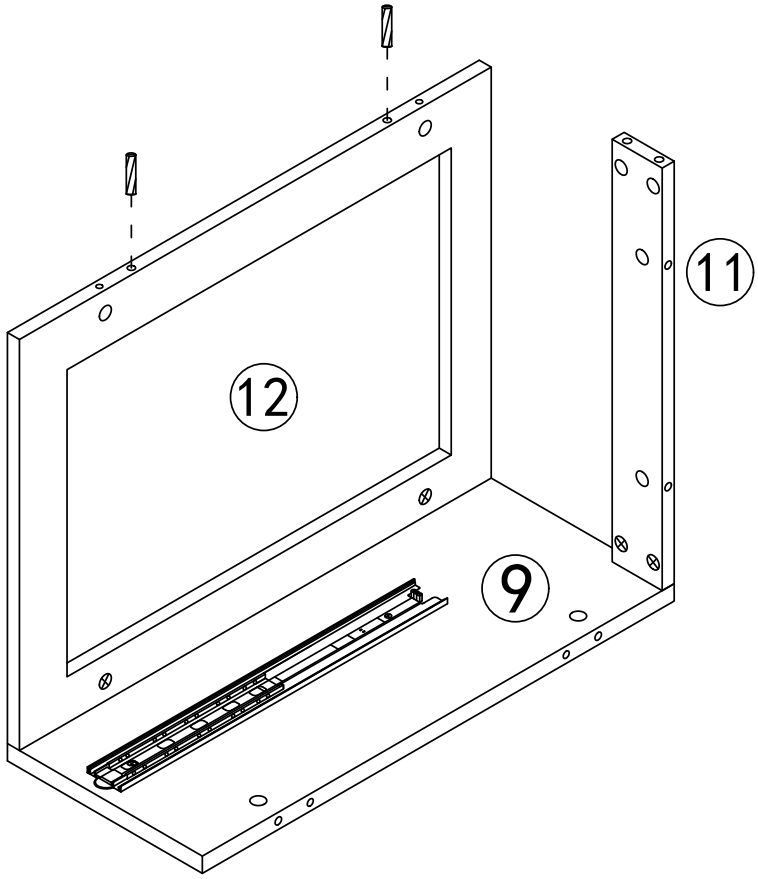

C x2

Step 21

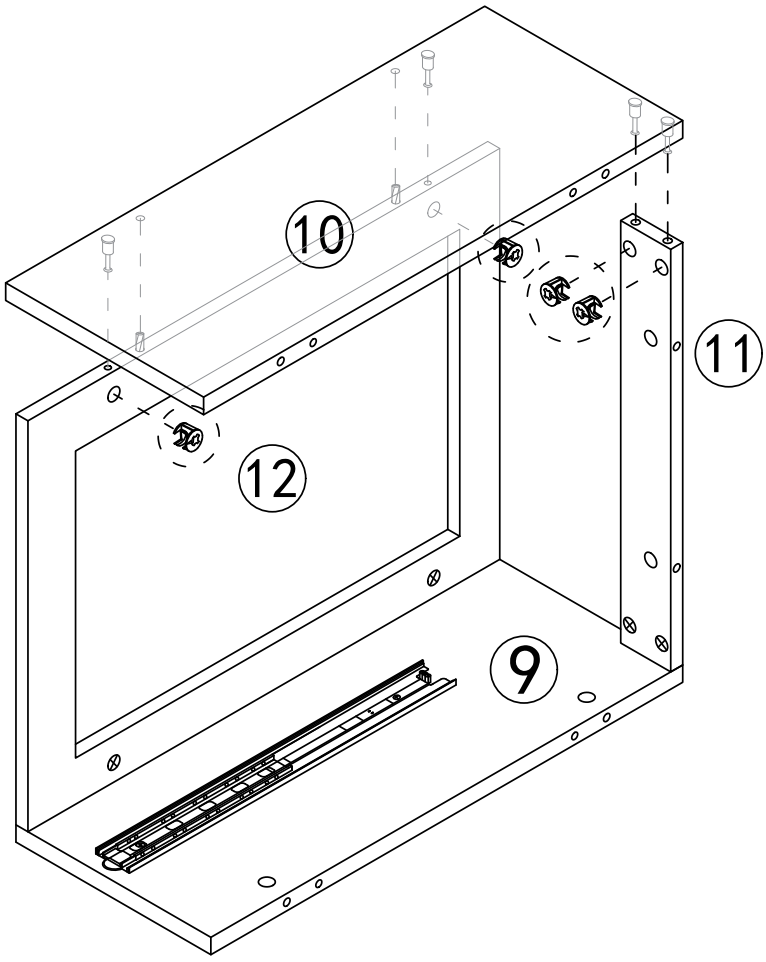

B x4

Step 22

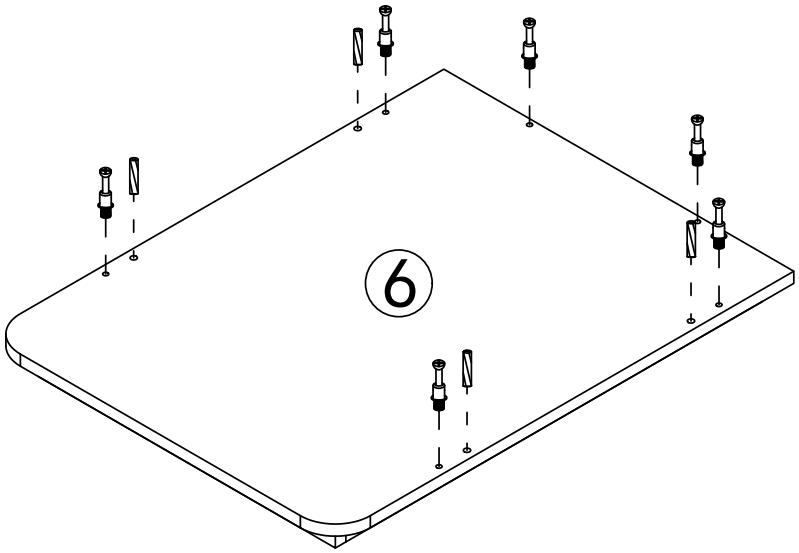

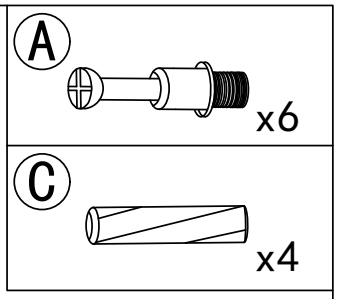

Step 23

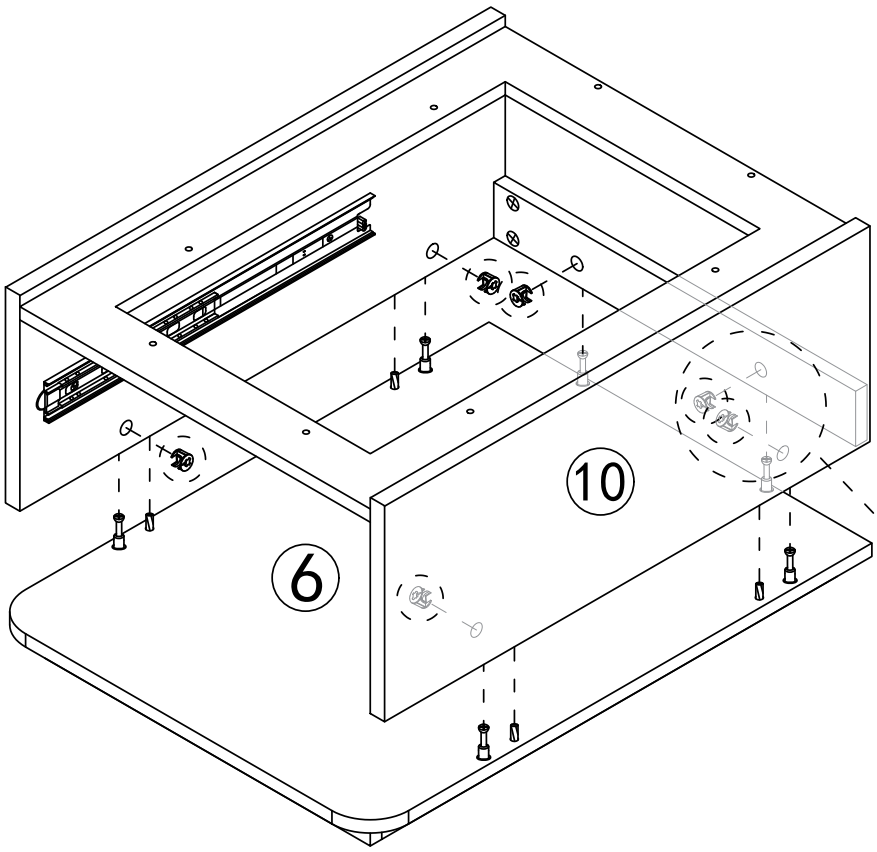

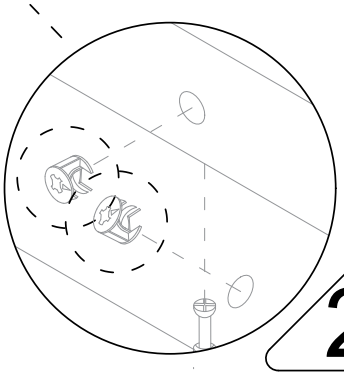

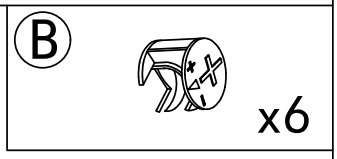

Step 24

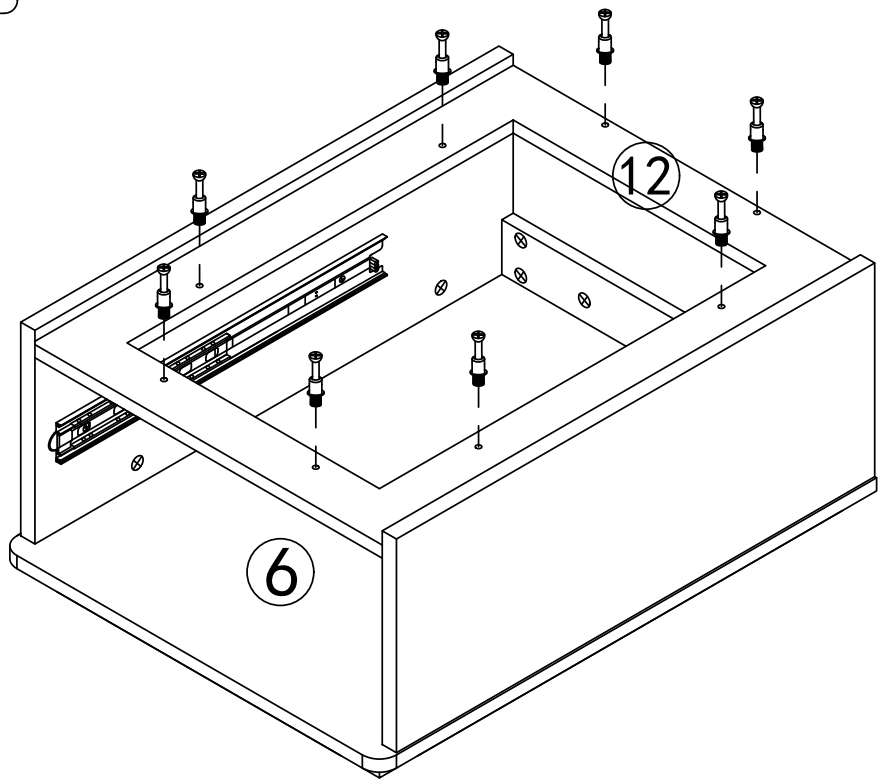

Step 25

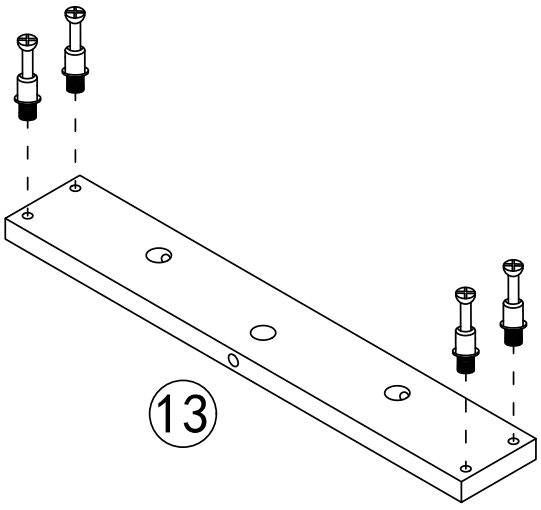

x2

Step 26

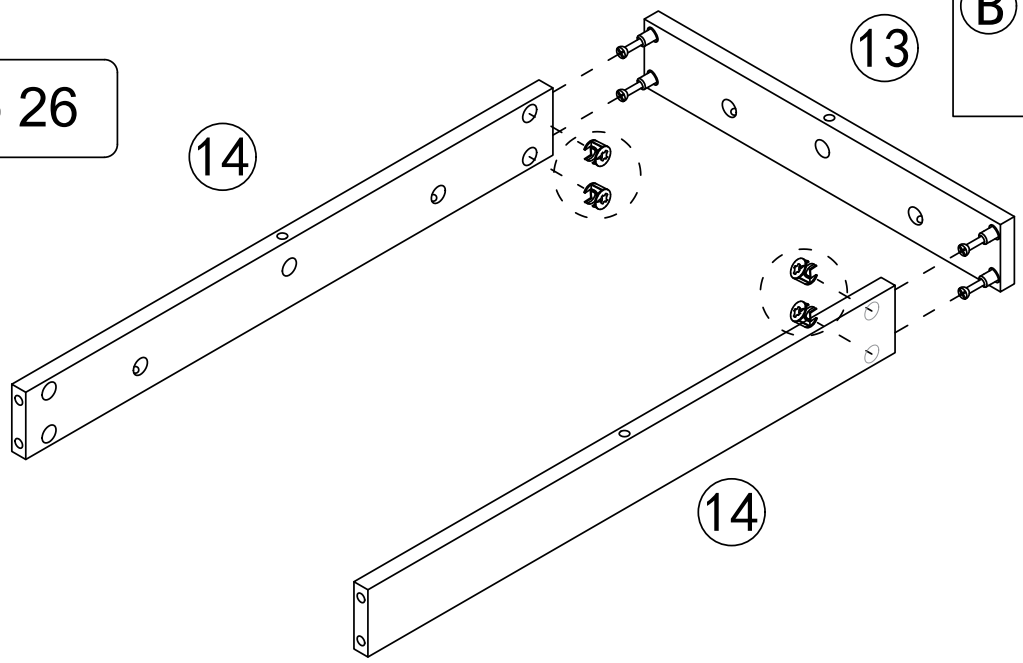

B x4

One 2-in-1 hole faces upwards and two 2-in-1 holes face downwards.

Note: Pay attention to the direction of the two-in-one hole when installing plates 13 and 14.

Step 27

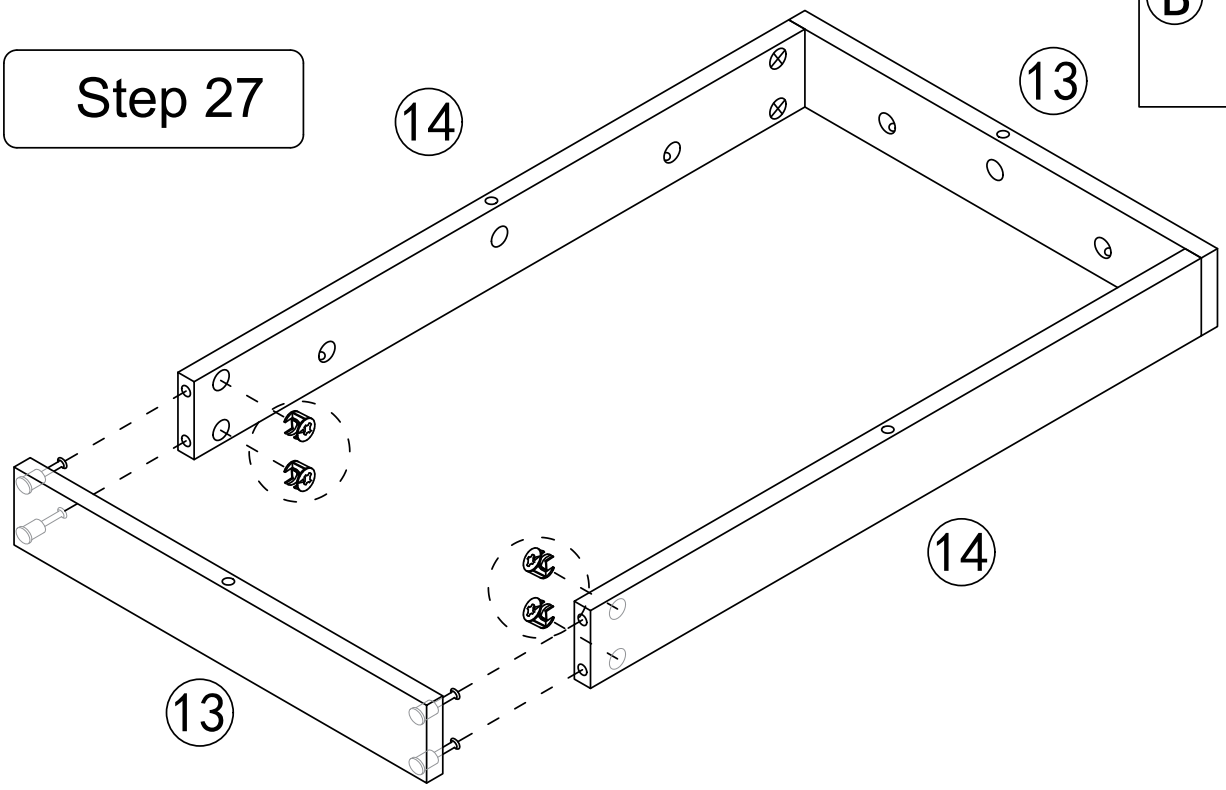

B x4

One 2-in-1 hole faces upwards and two 2-in-1 holes face downwards.

Note: Pay attention to the direction of the two-in-one hole when installing plates 13 and 14.

Step 28

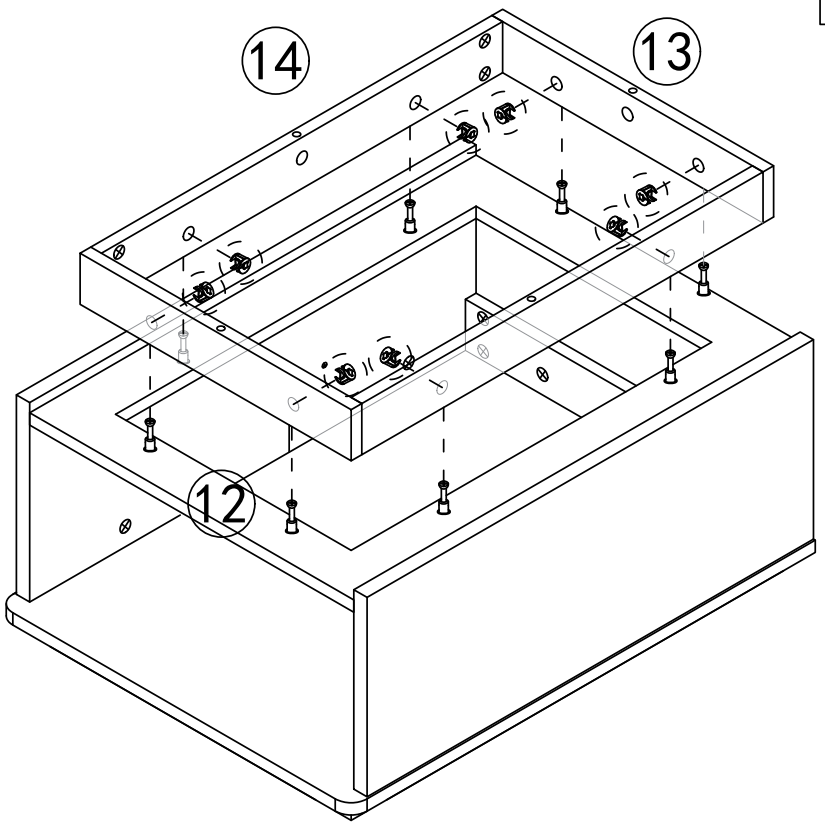

B x8

Step 29

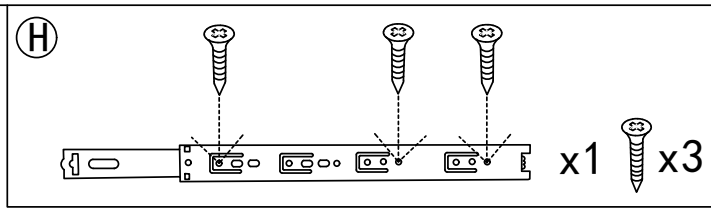

This hole is for strengthening fixed hole customers can choose to install according to their needs.

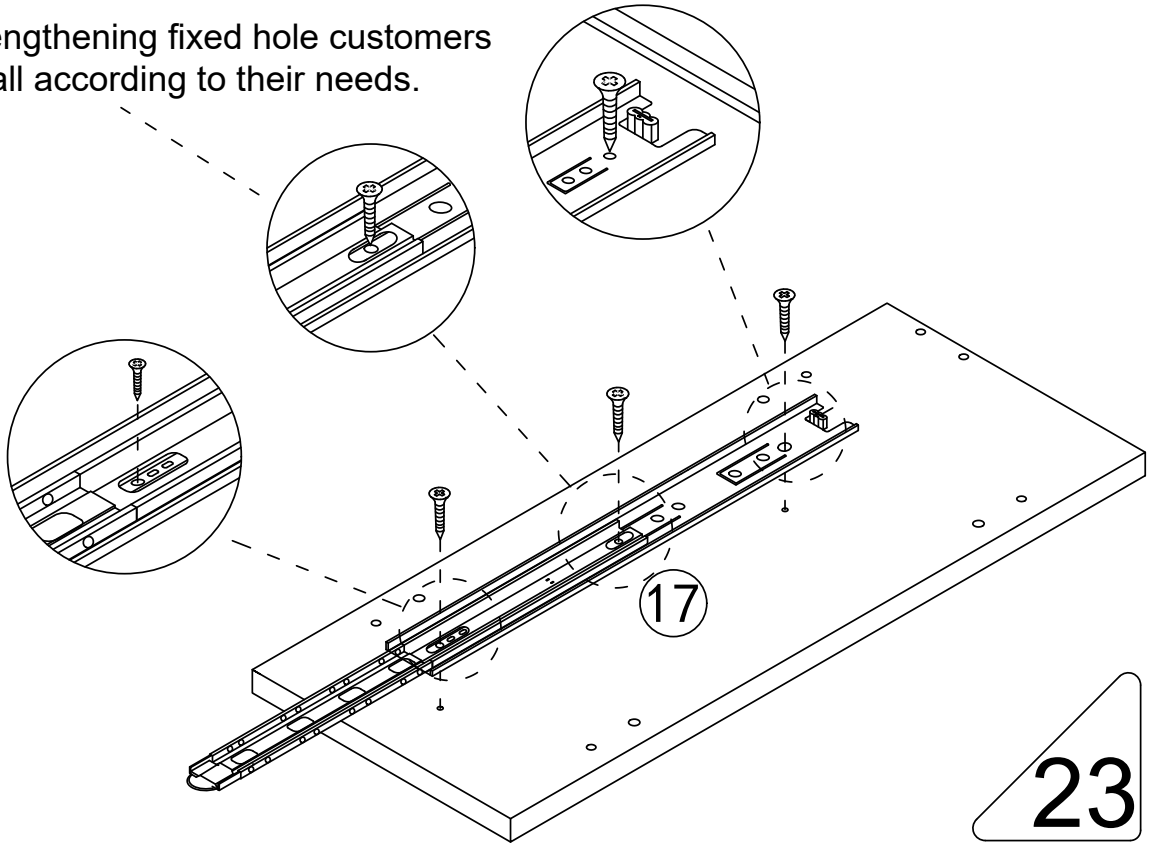

Step 30

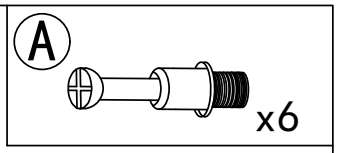

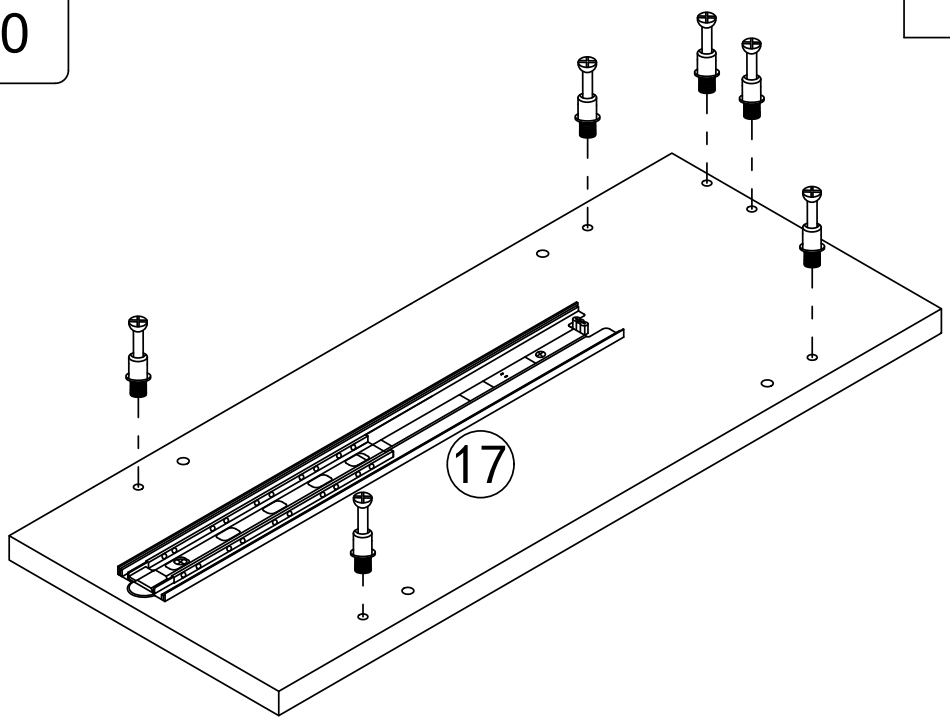

Step 31

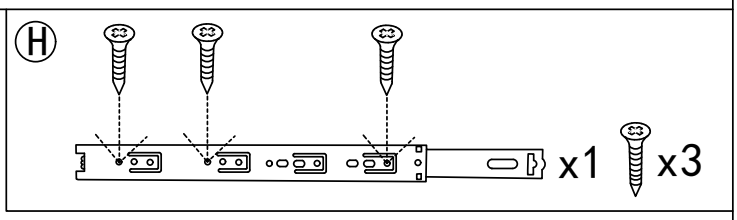

This hole is for strengthening fixed hole customers can choose to install according to their needs.

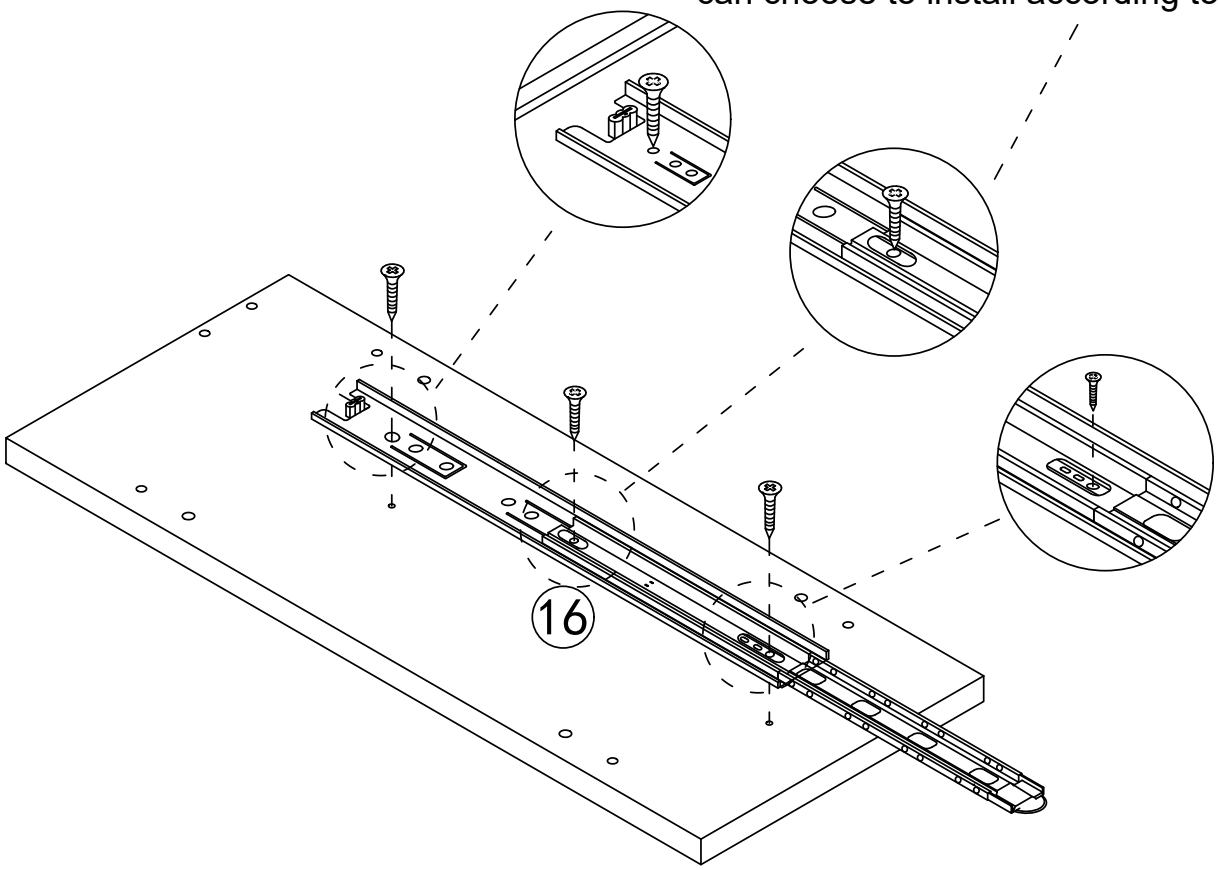

Step 32

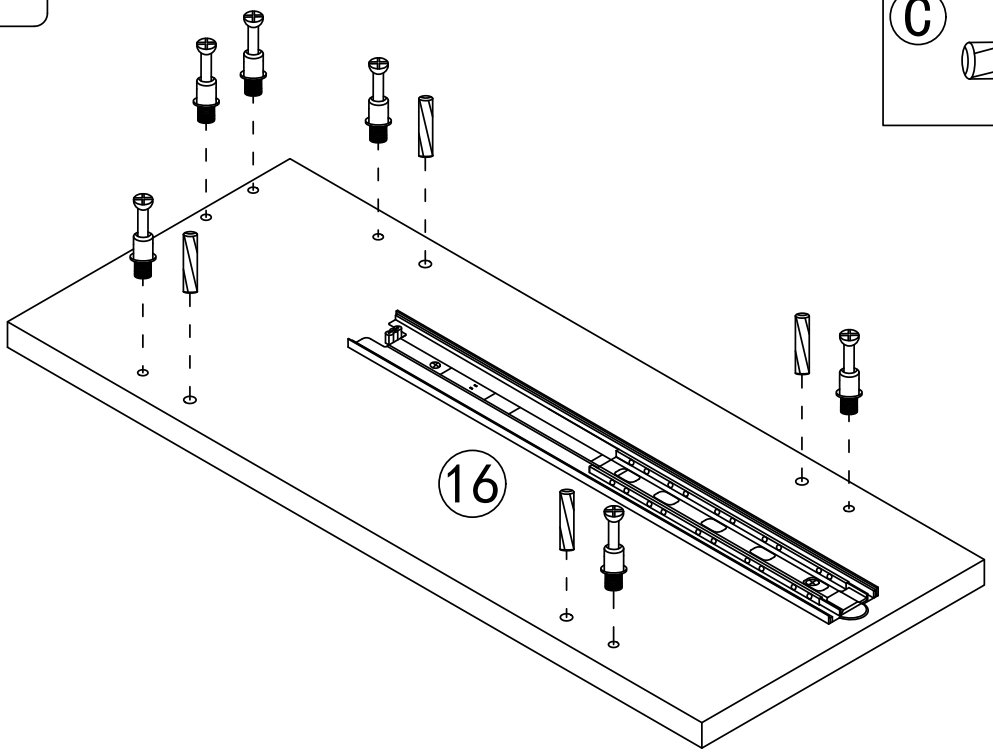

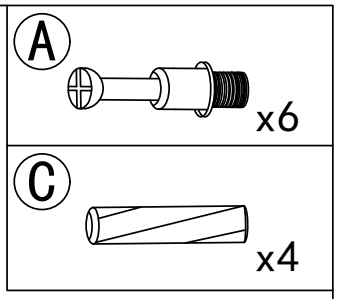

Step 33

Flip the panel

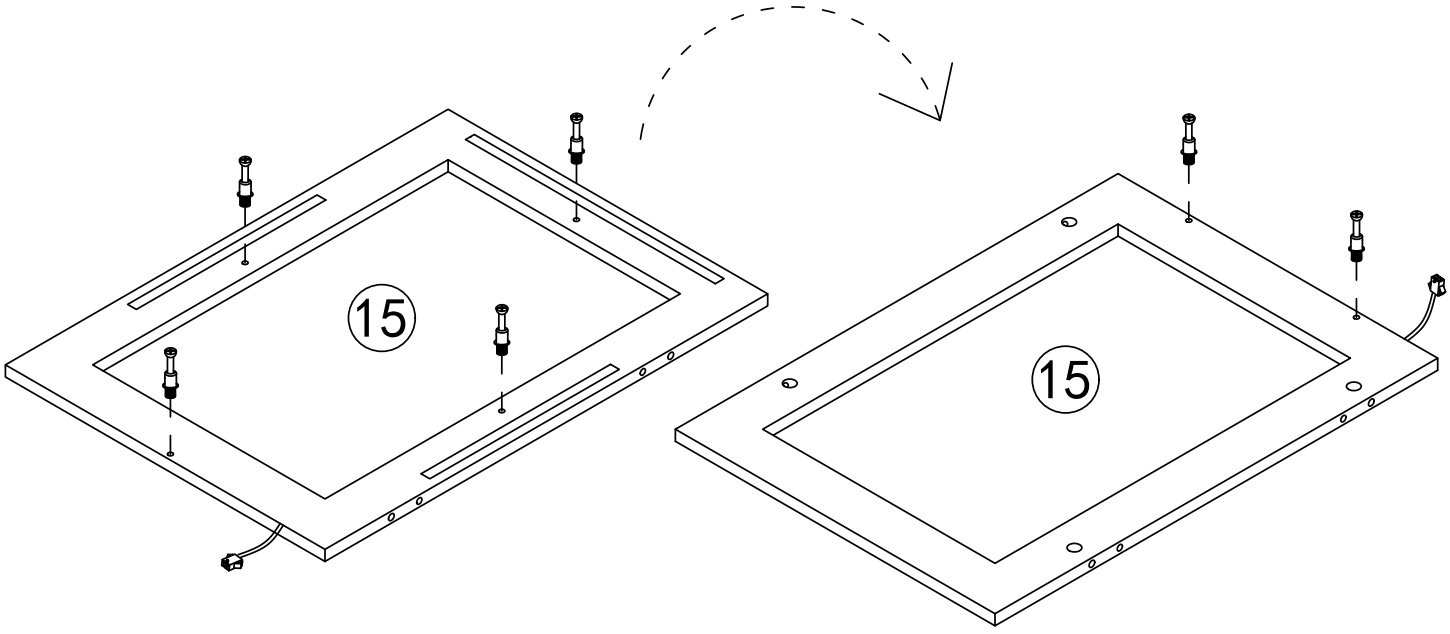

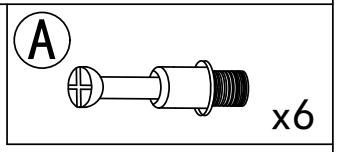

Step 34

B x2

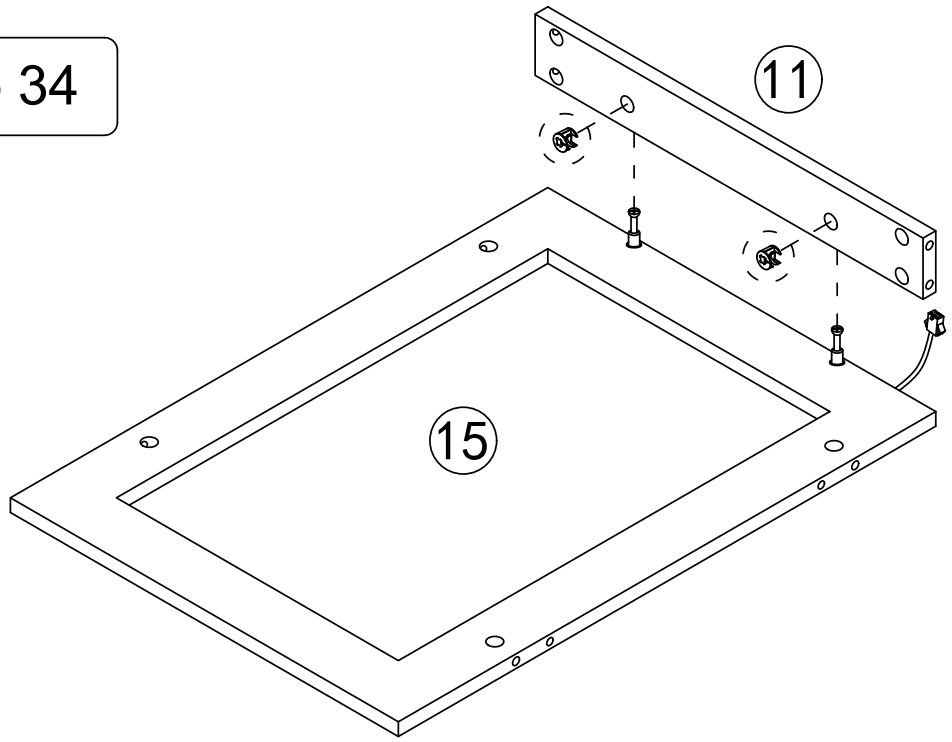

Step 35

B x4

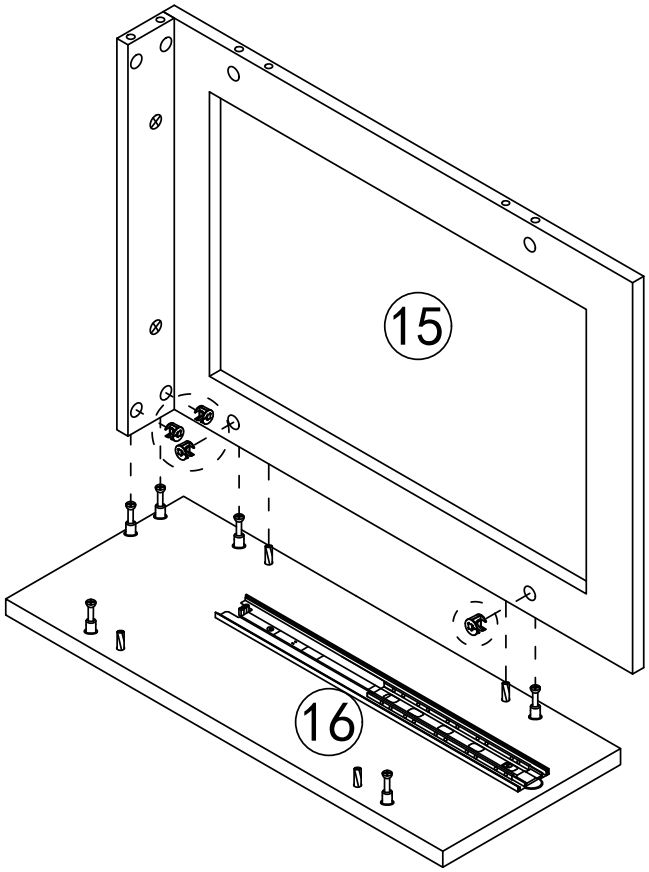

Step 36

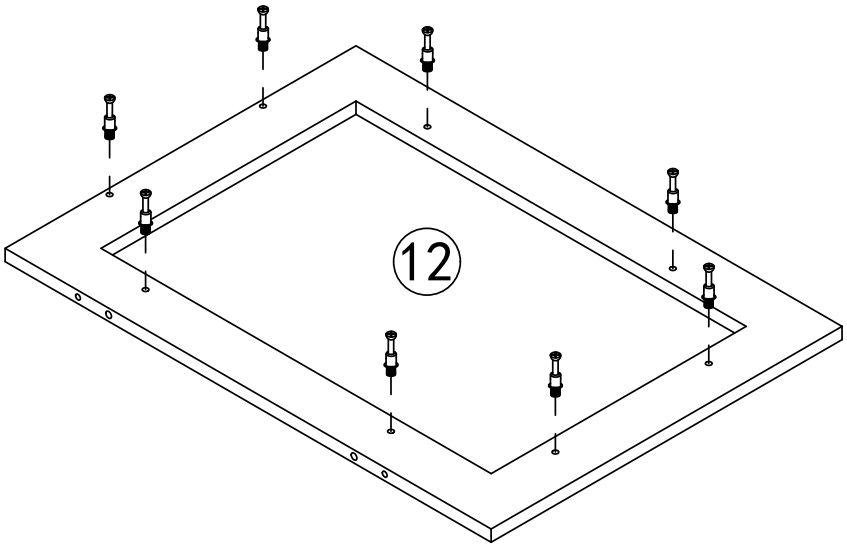

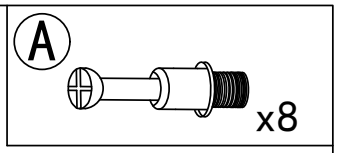

Step 37

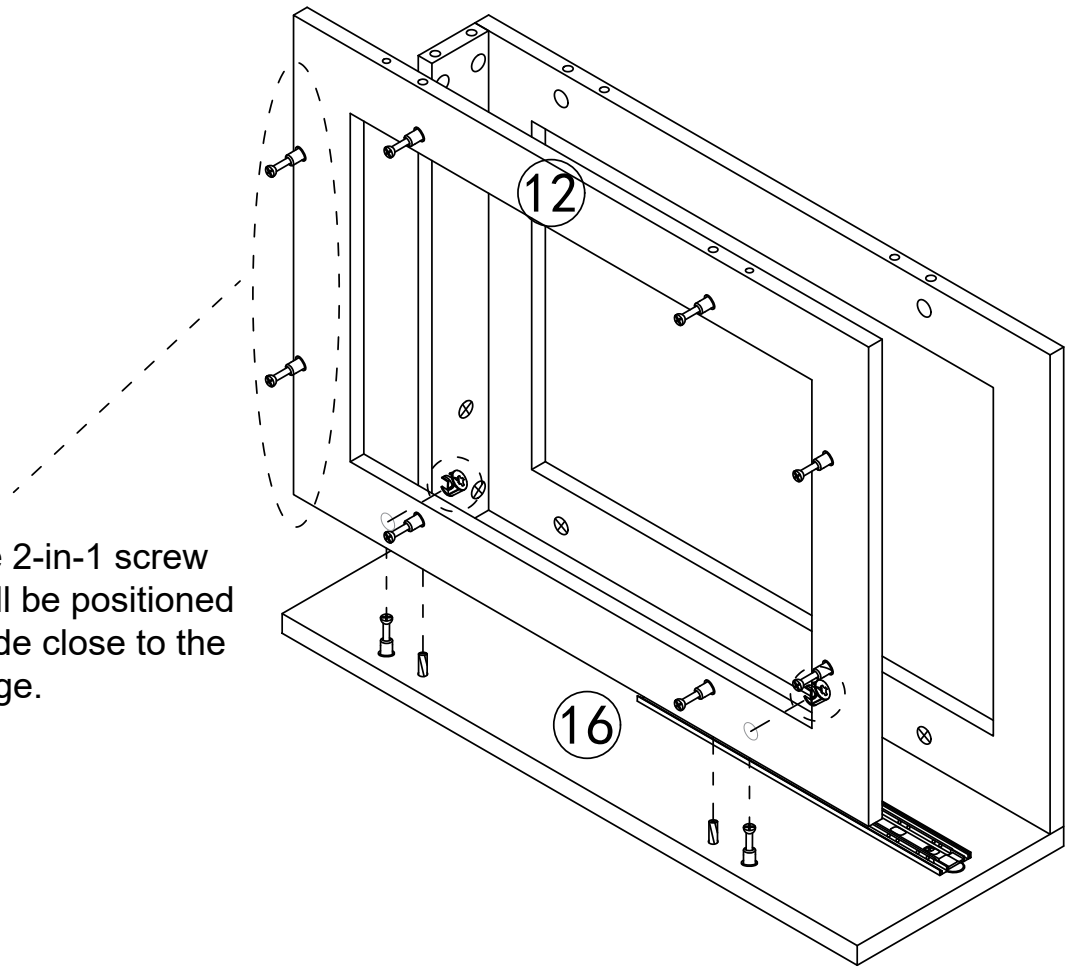

Note:The 2-in-1 screw here shall be positioned on the side close to the panel edge.

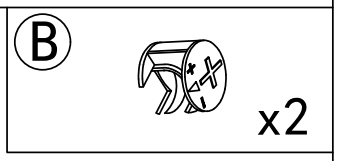

Step 38

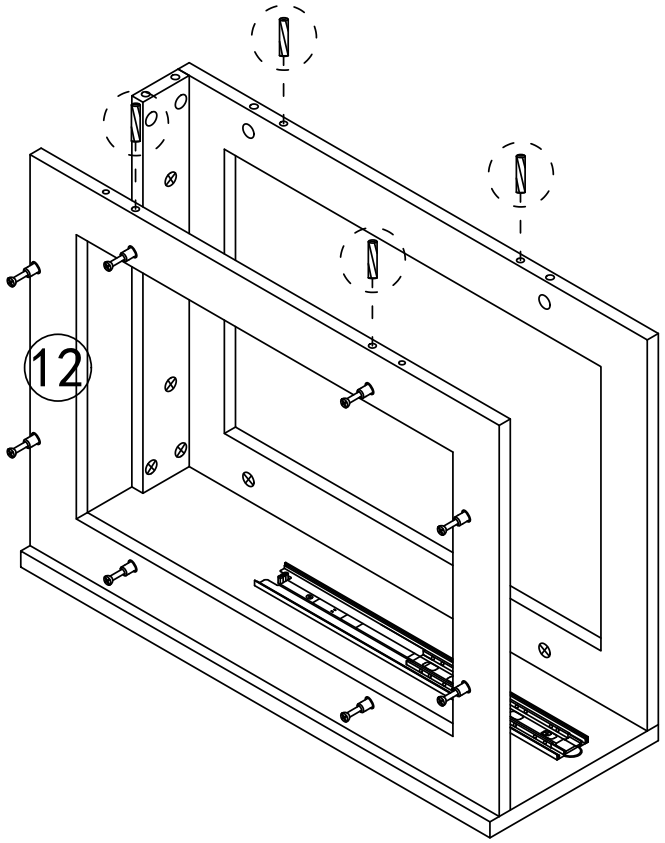

C

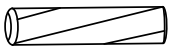

x4

Step 39

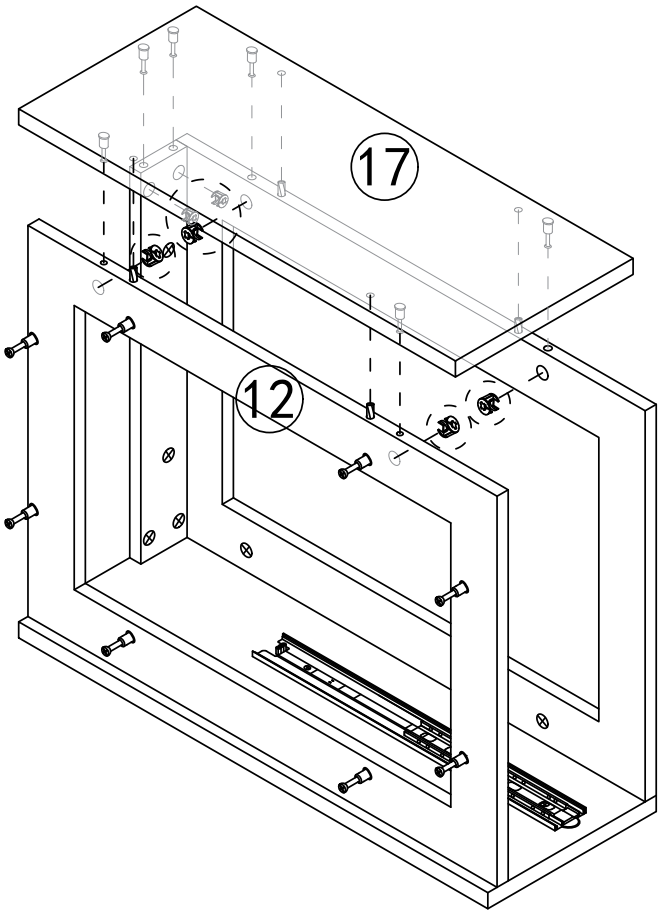

B



x6

Step 40

B x4

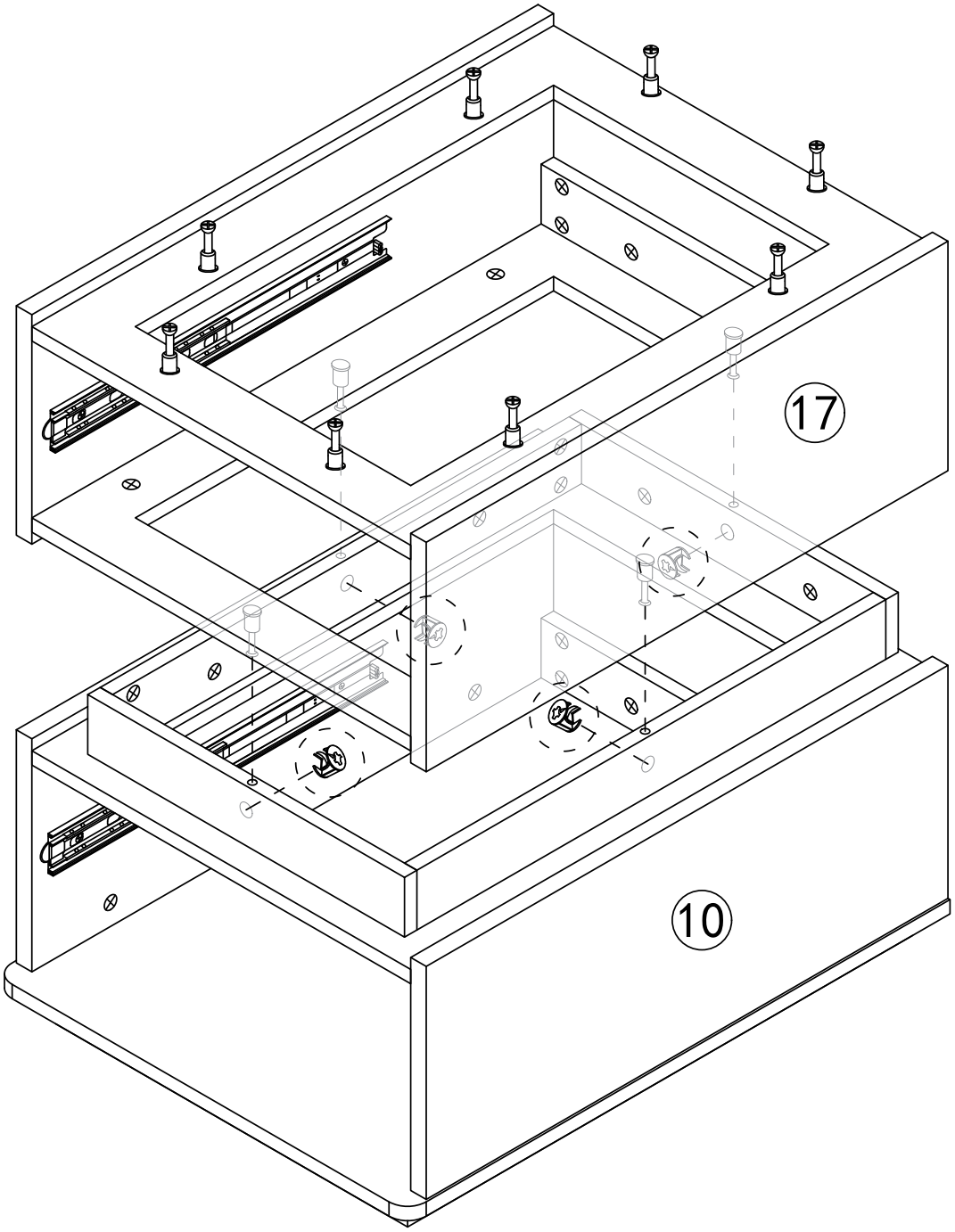

Note: Put your hand in from above to install the nut.

Step 41

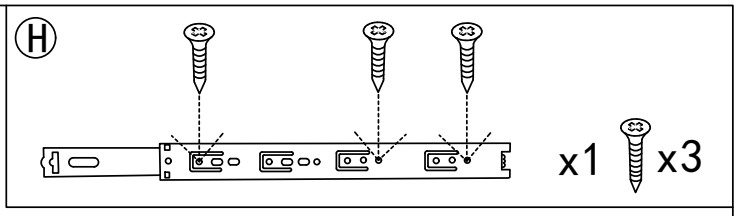

This hole is for strengthening fixed hole customers can choose to install according to their needs.

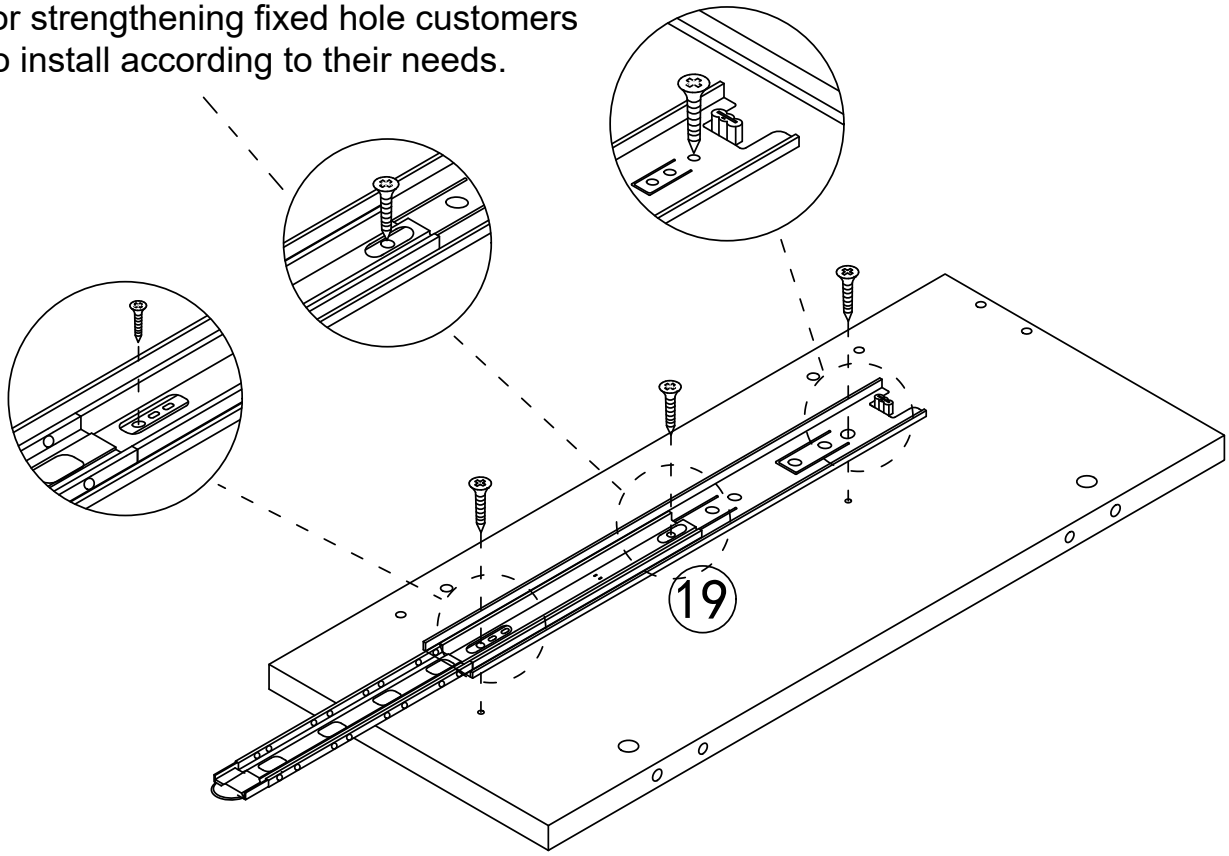

Step 42

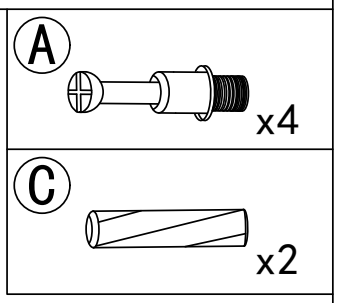

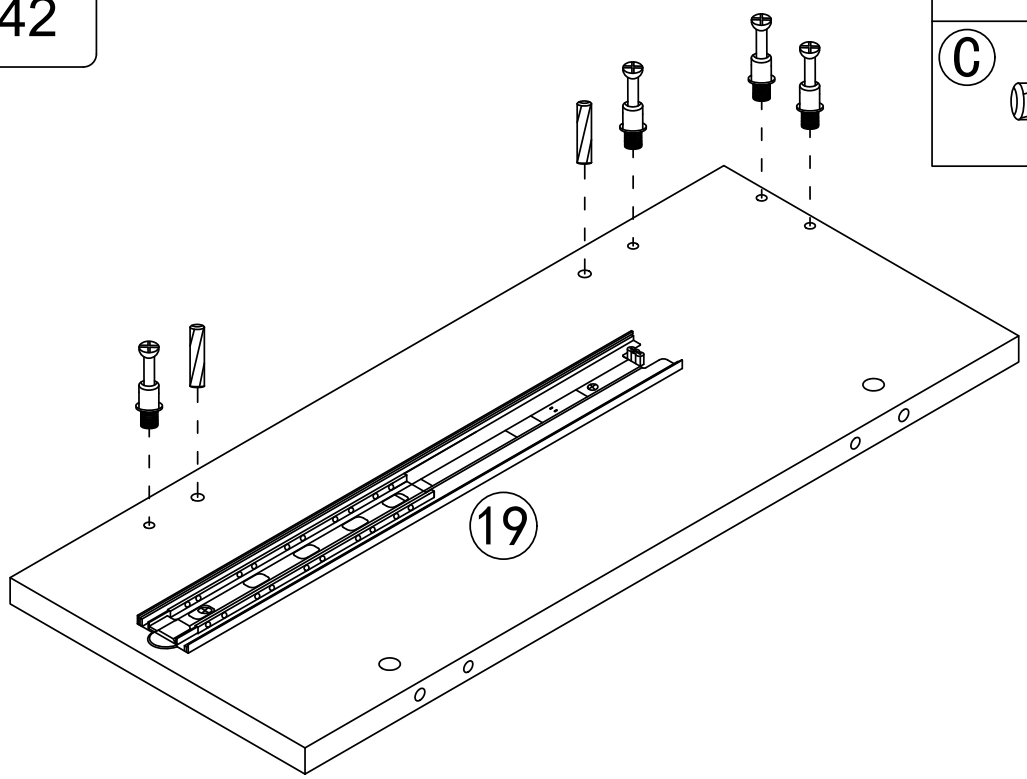

Step 43

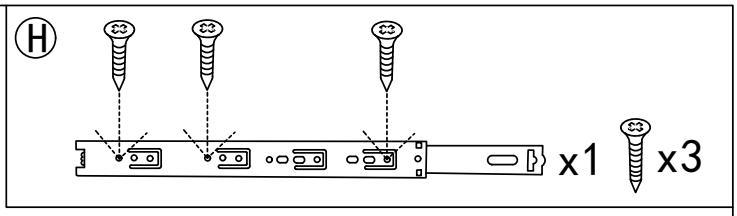

This hole is for strengthening fixed hole customers can choose to install according to their needs.

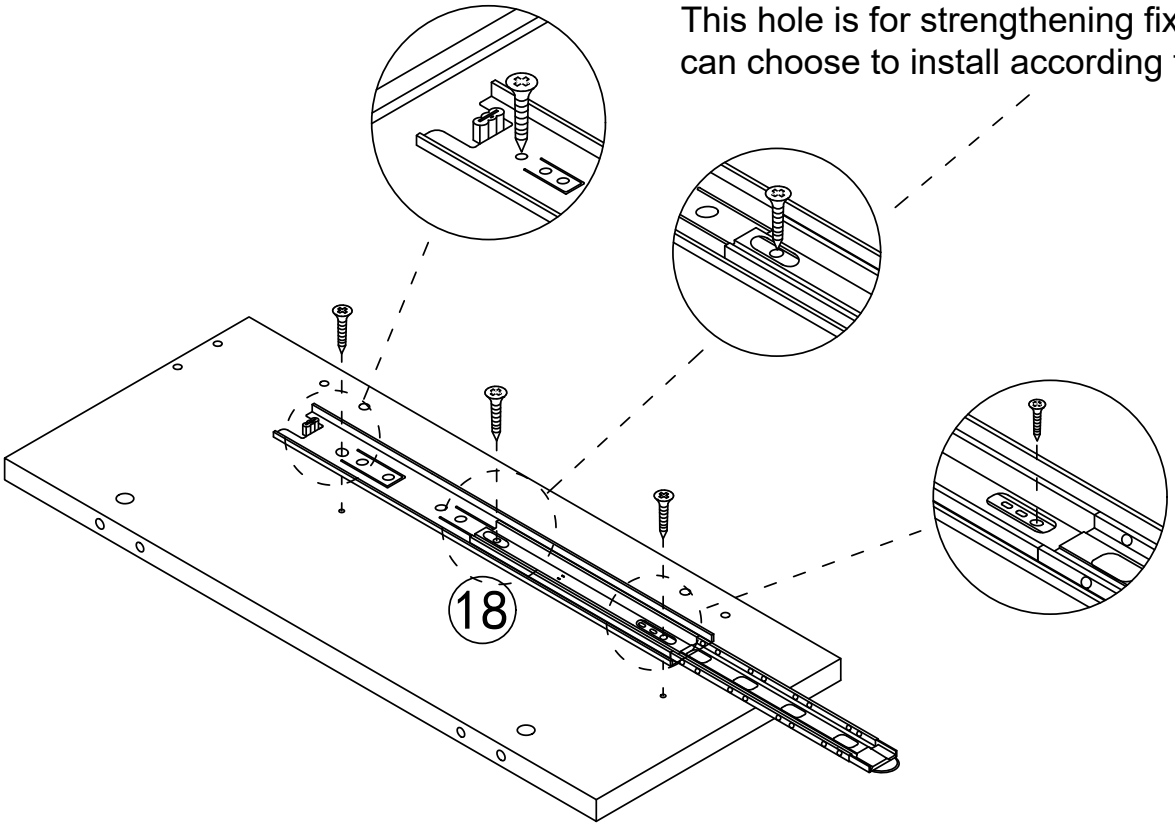

Step 44

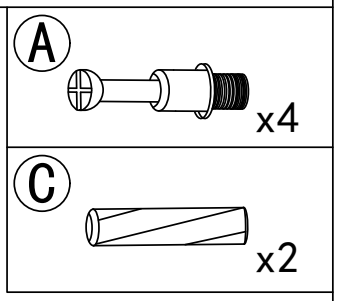

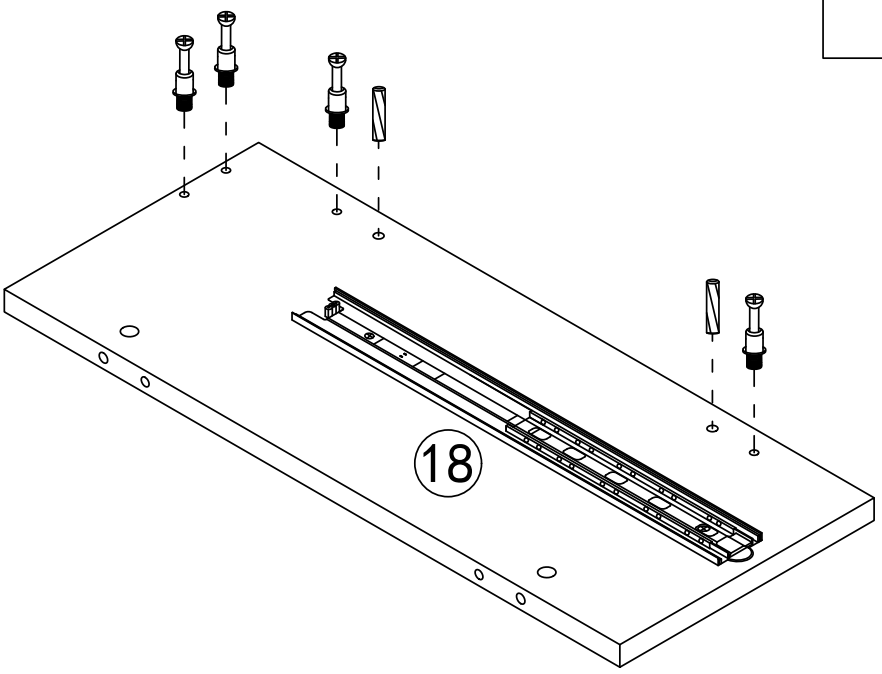

Step 45

Flip the panel

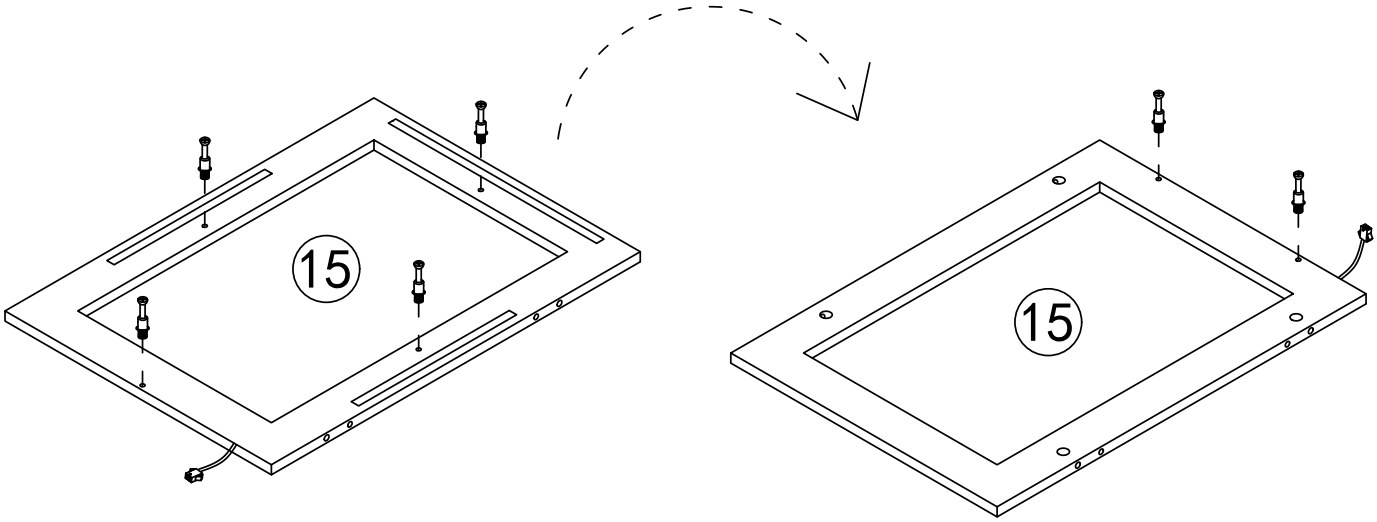

A

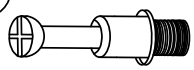

x6

Step 46

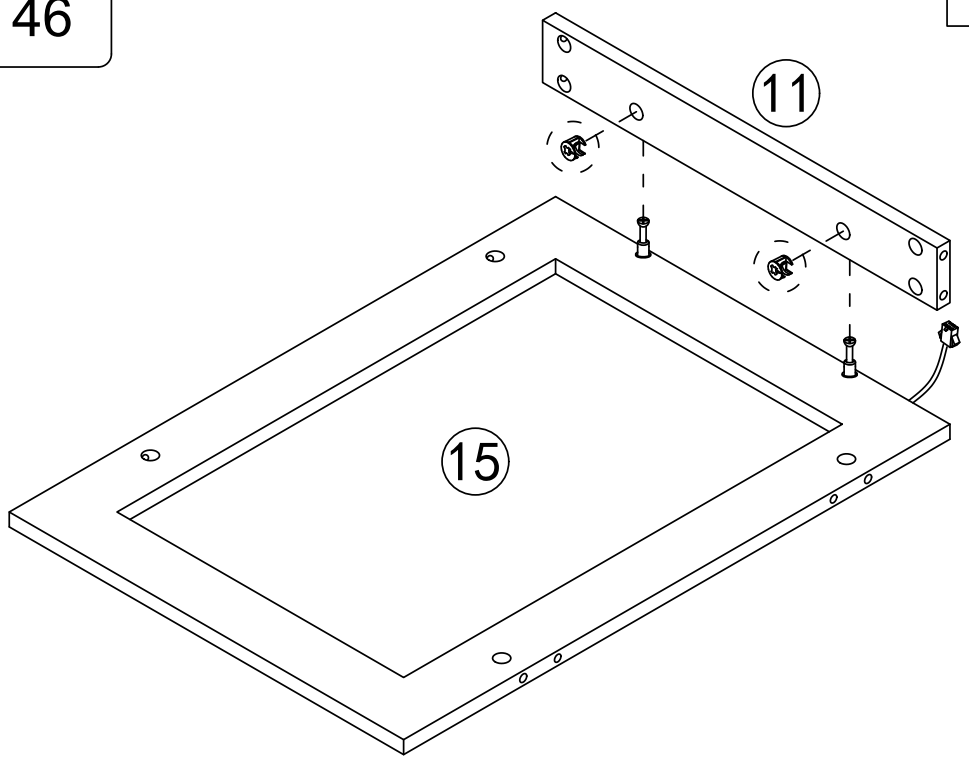

B



x2

Step 47

B x4

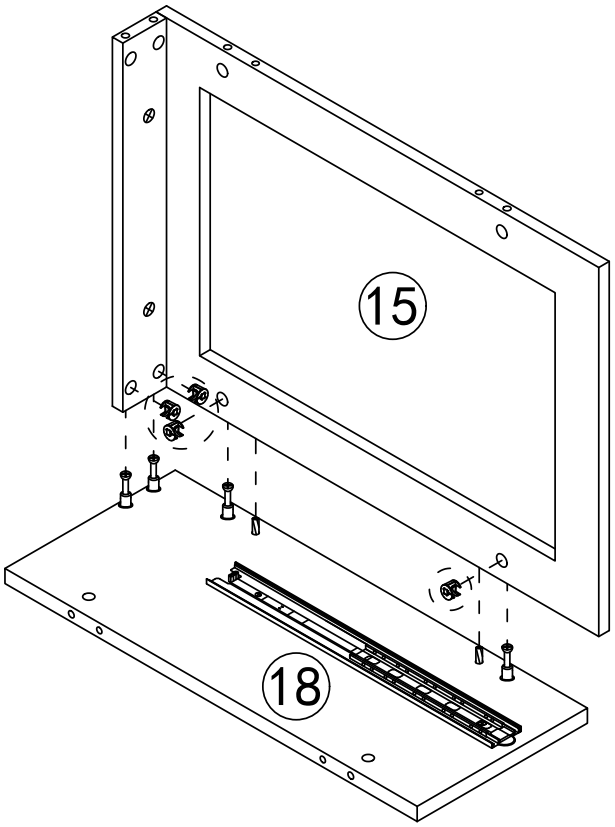

Step 48

C x2

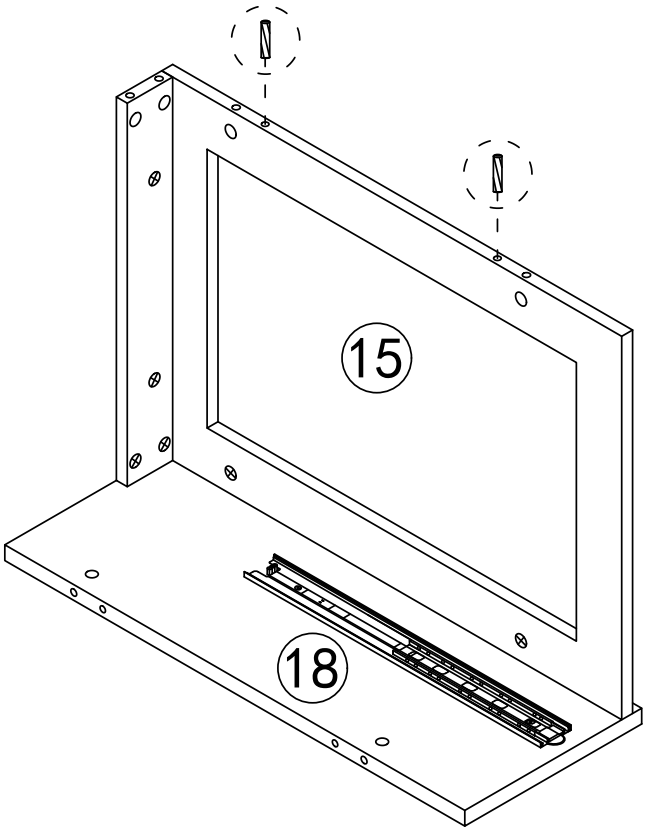

Step 49

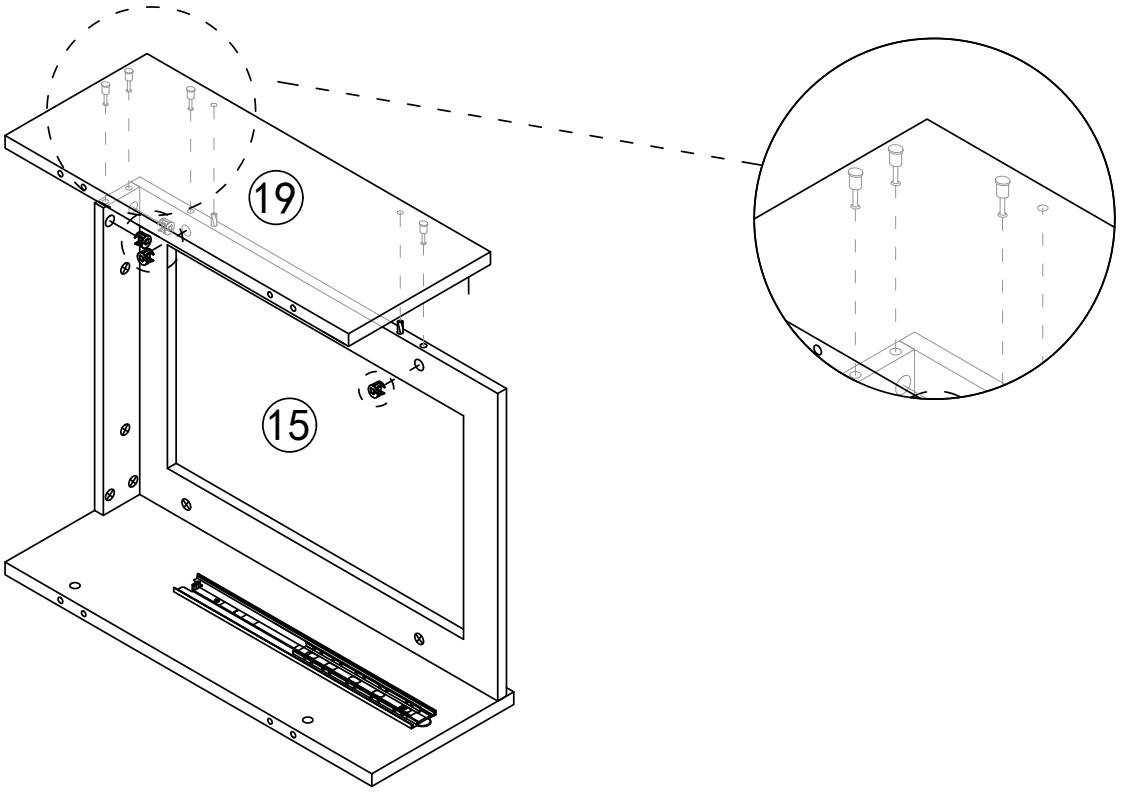

Step 50

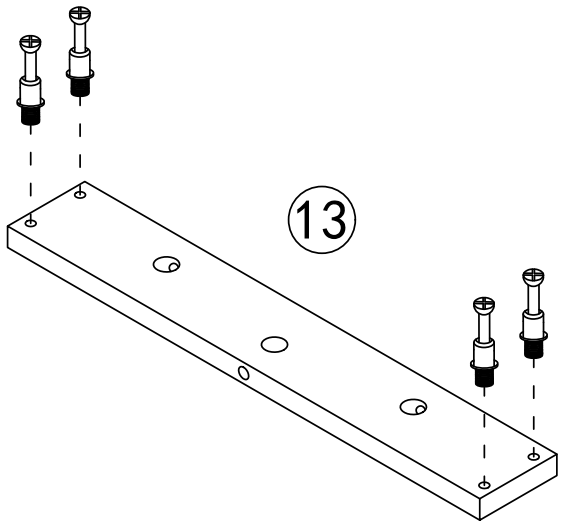

x2

Step 51

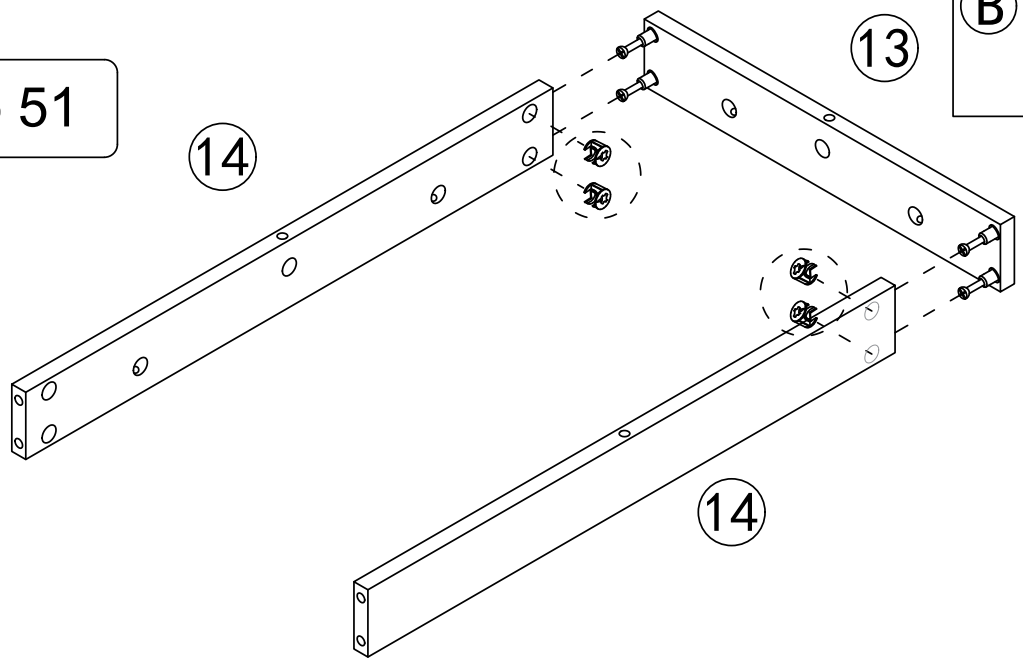

B x4

One 2-in-1 hole faces upwards and two 2-in-1 holes face downwards.

Note: Pay attention to the direction of the two-in-one hole when installing plates 13 and 14.

Step 52

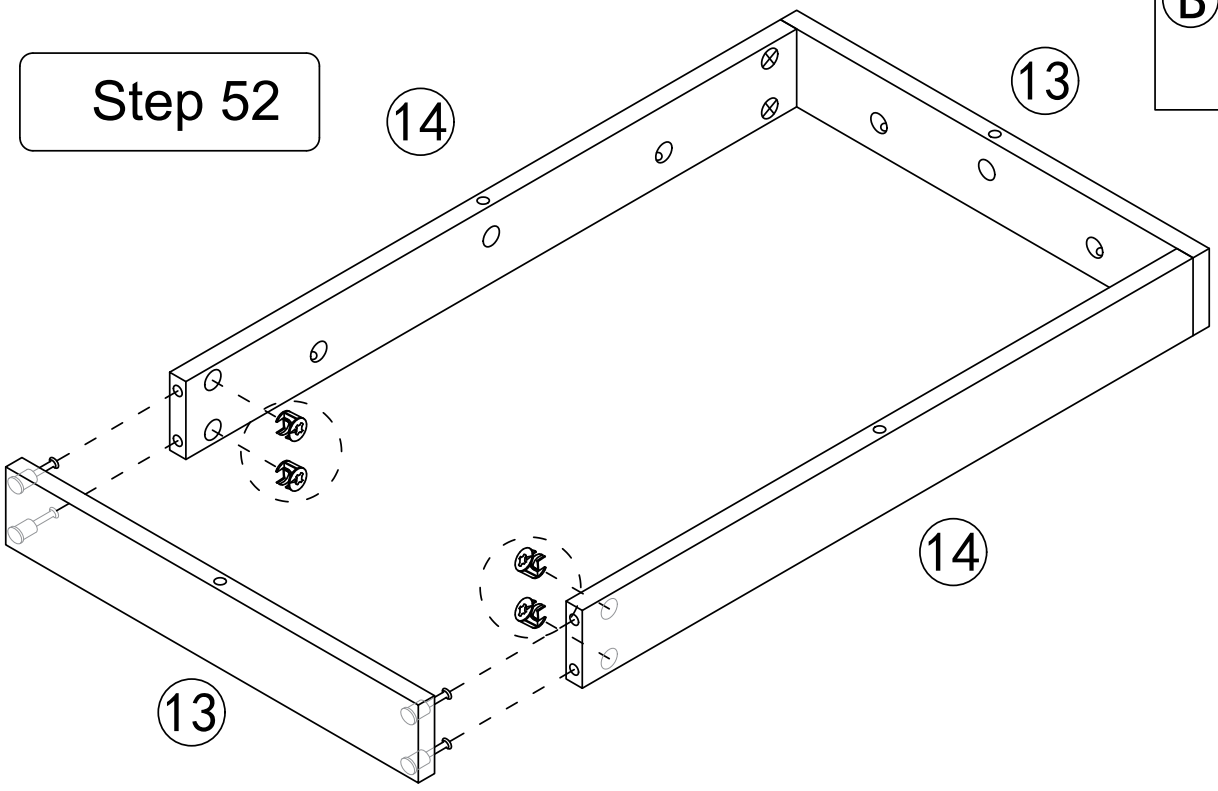

B x4

One 2-in-1 hole faces upwards and two 2-in-1 holes face downwards.

Note: Pay attention to the direction of the two-in-one hole when installing plates 13 and 14.

Step 53

B x8

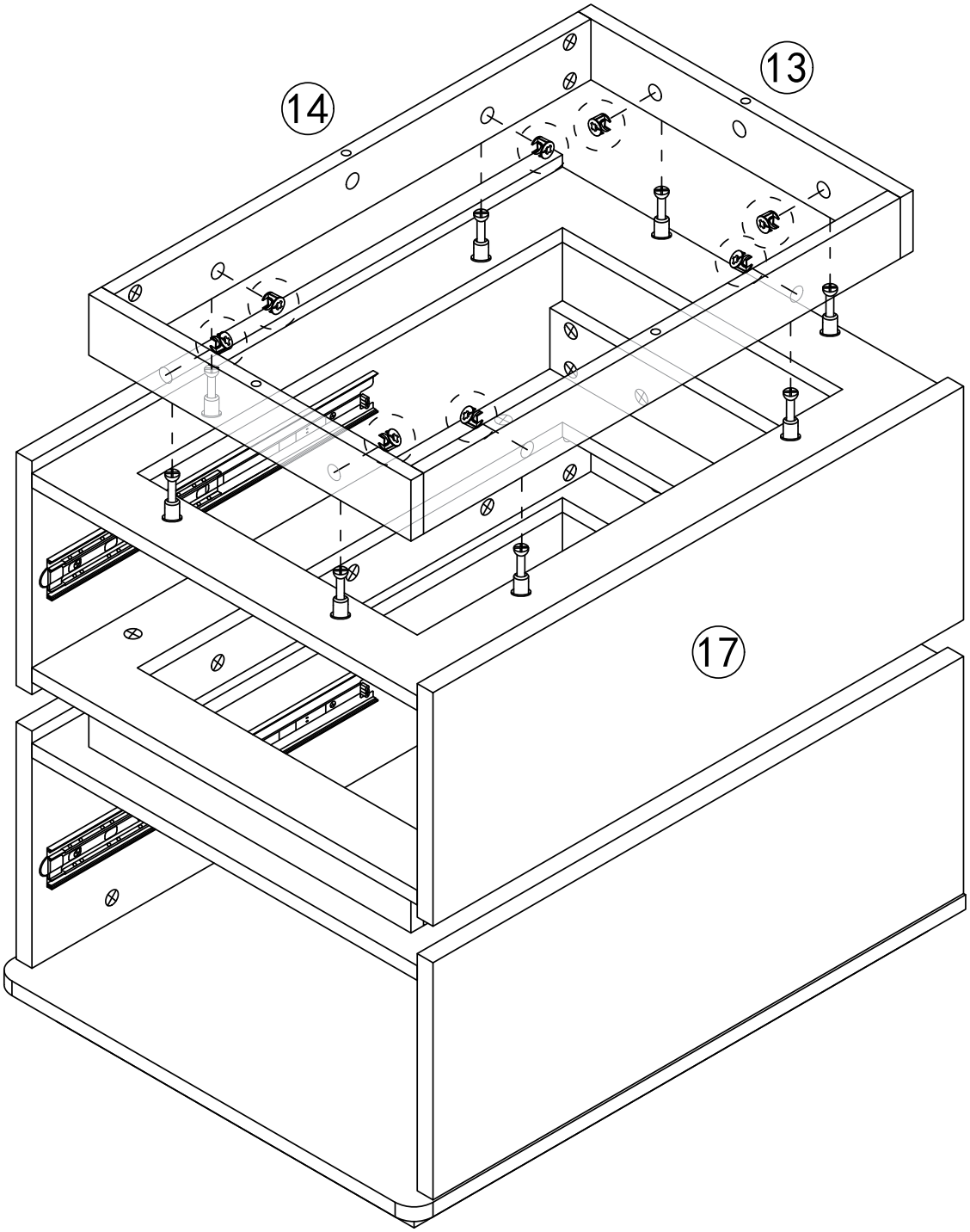

Step 54

B x4

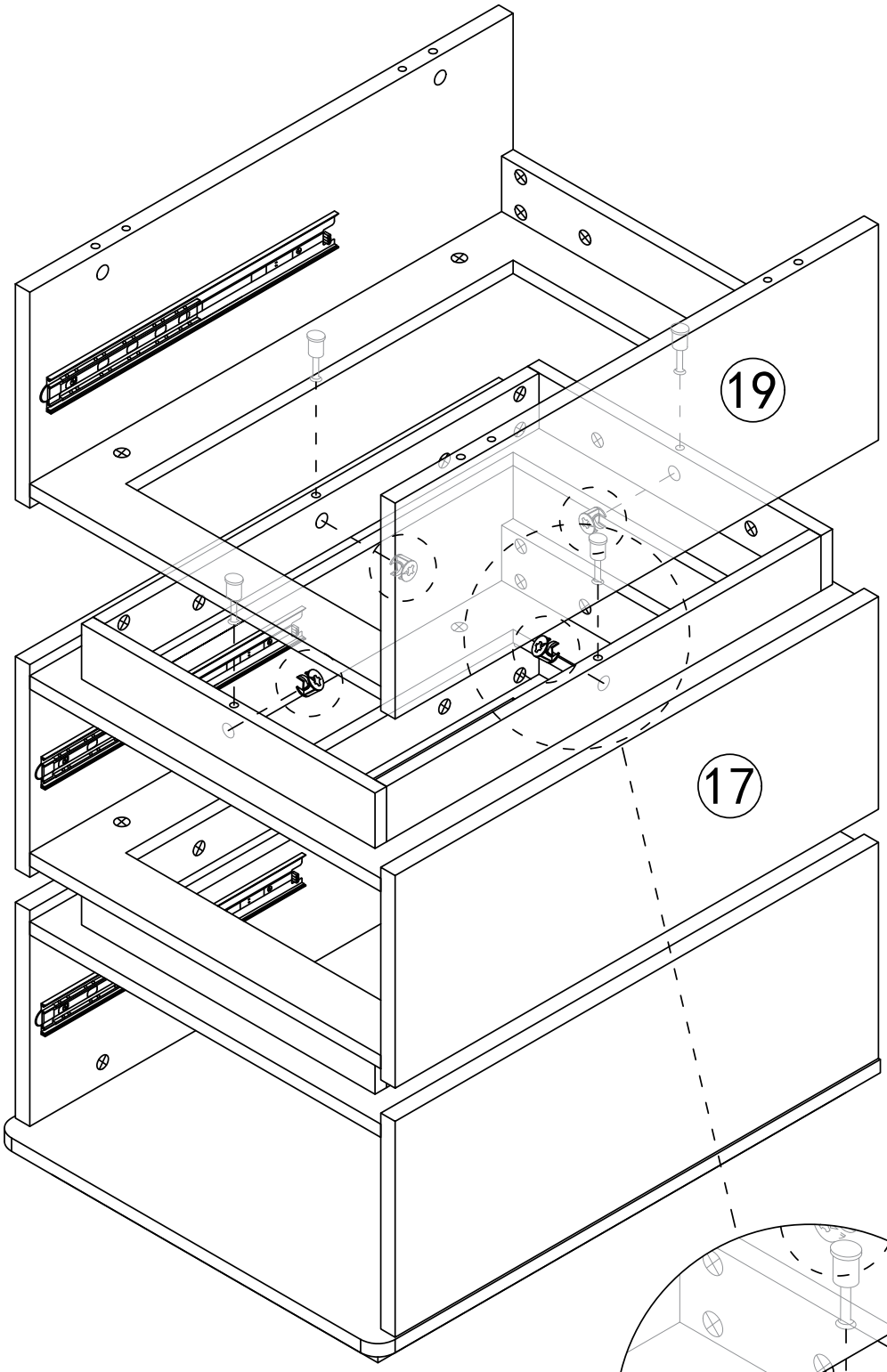

Step 55

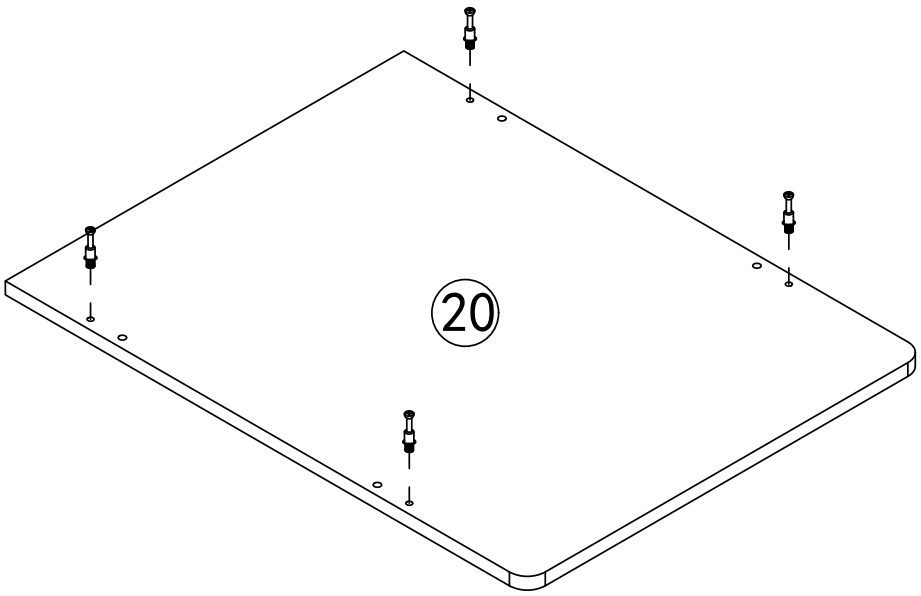

Step 56

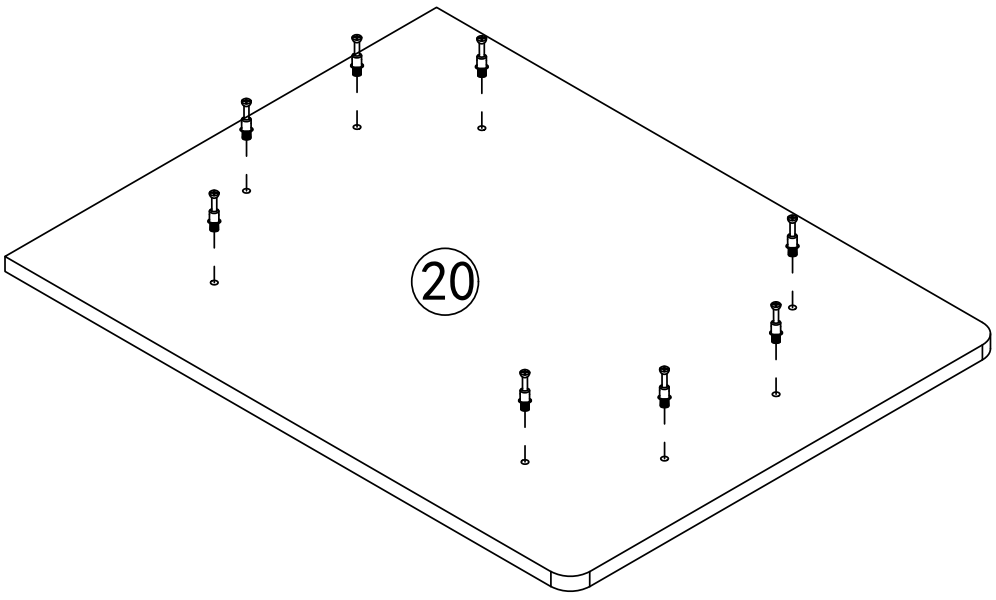

Step 57

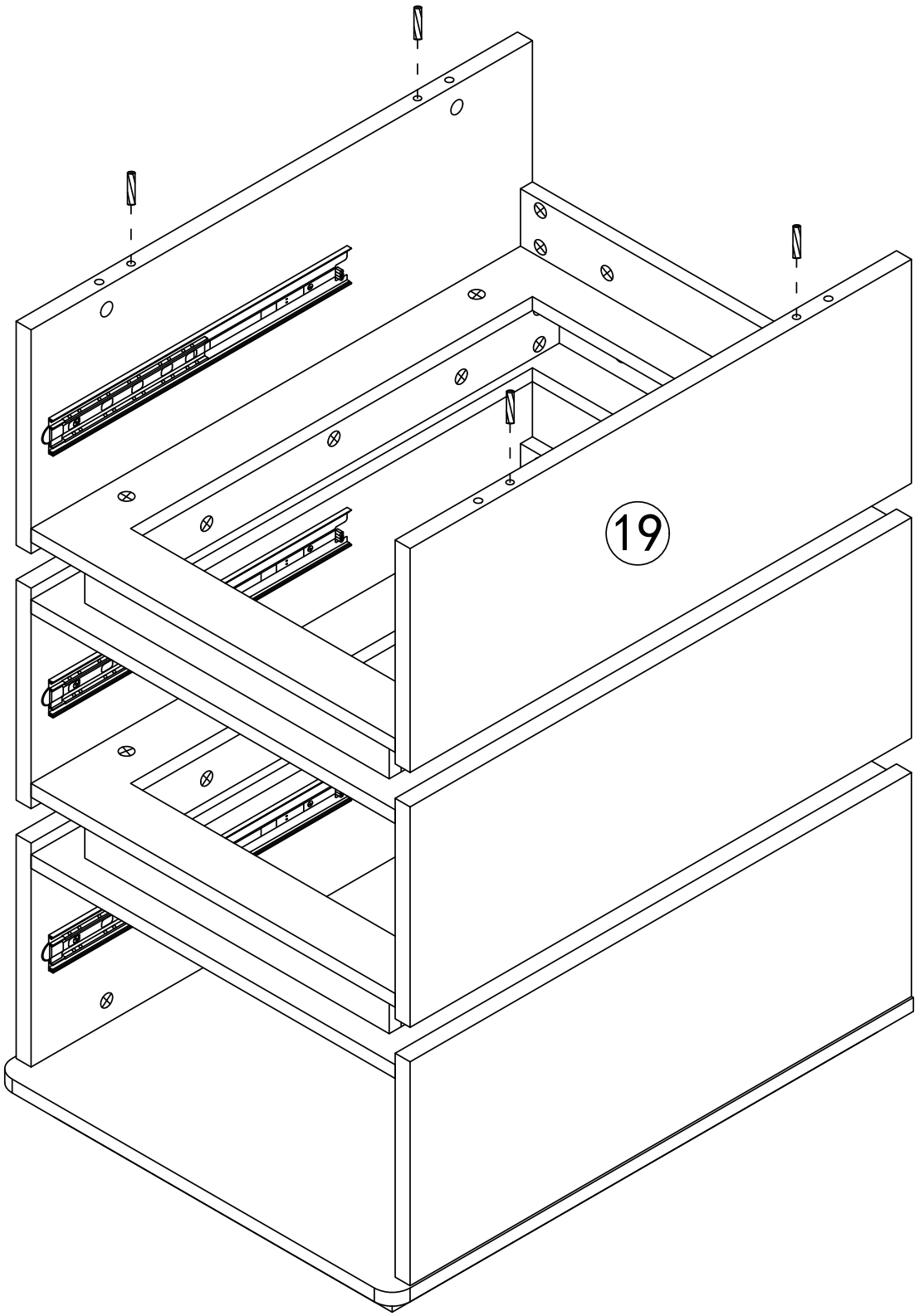

Step 58

B x4

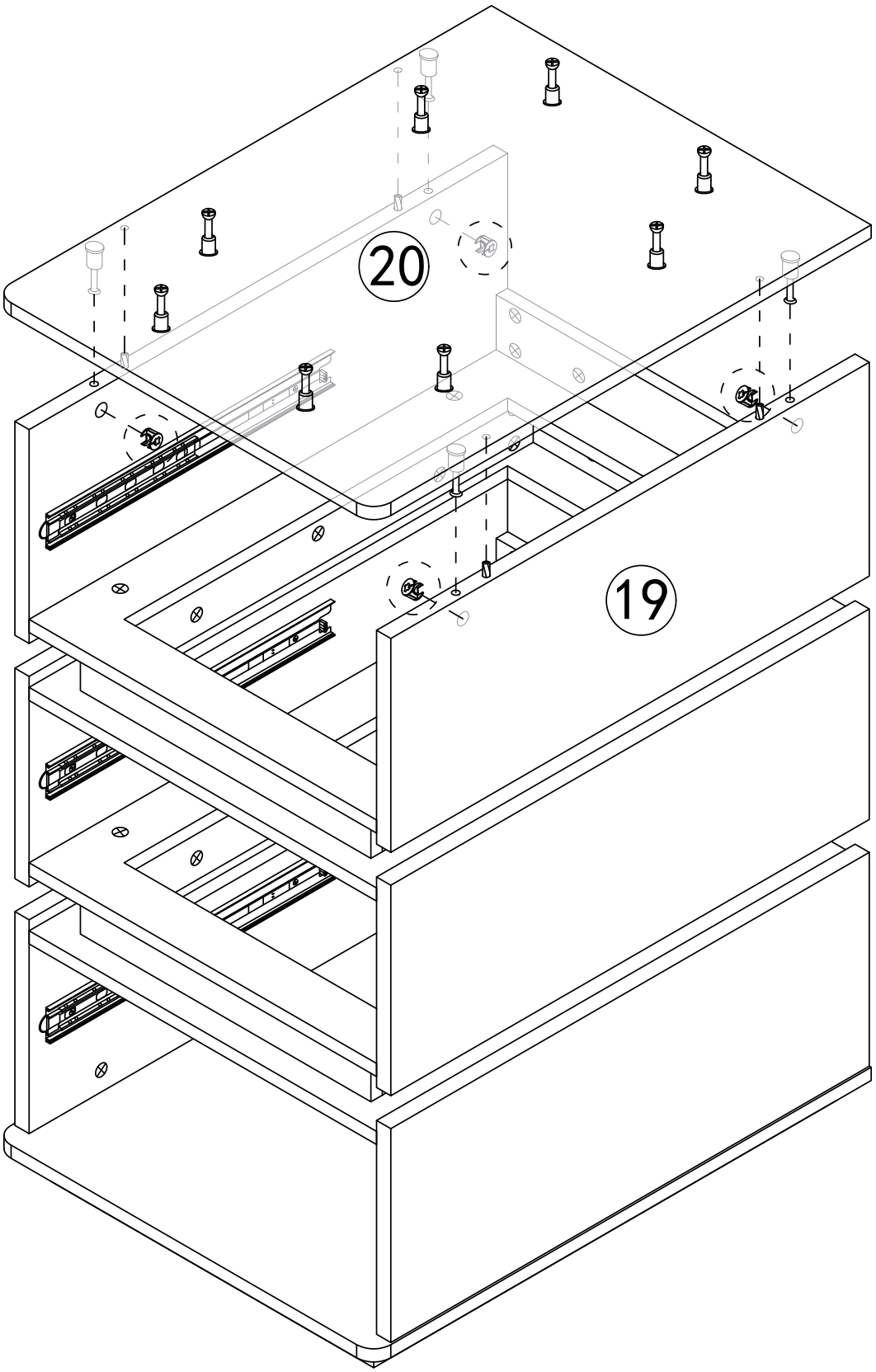

Step 59

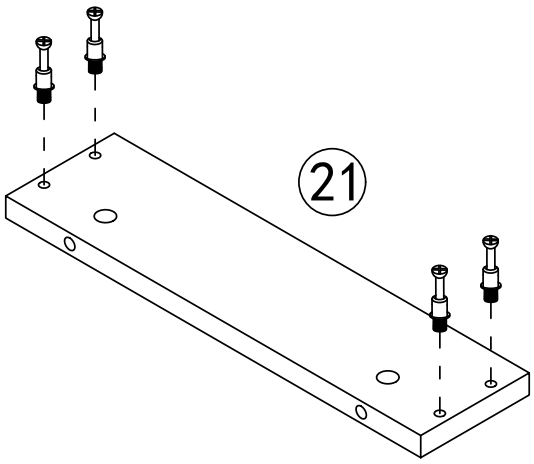

x2

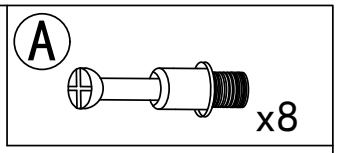

Step 60

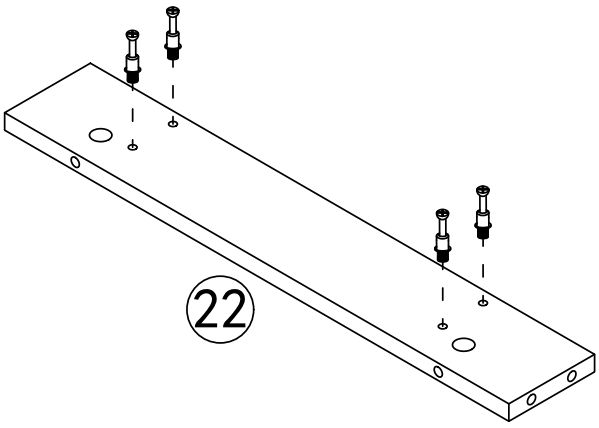

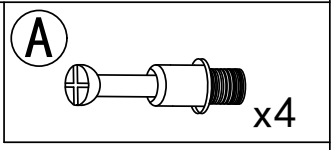

Step 61

B x4

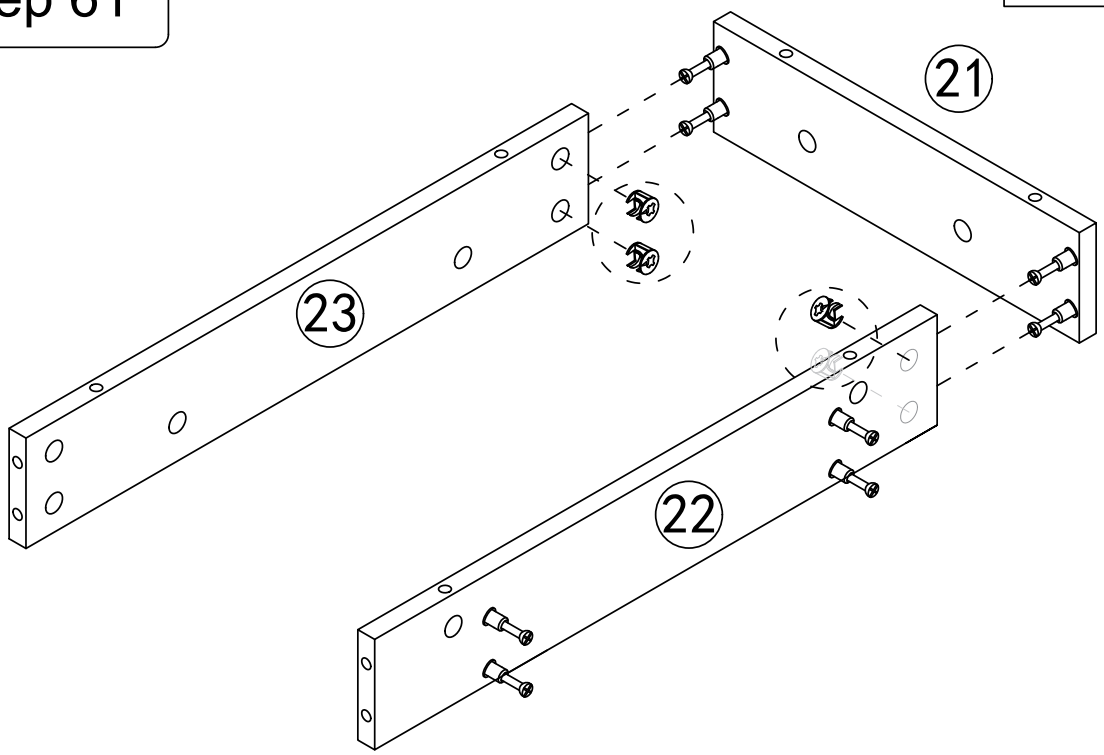

Step 62

B x4

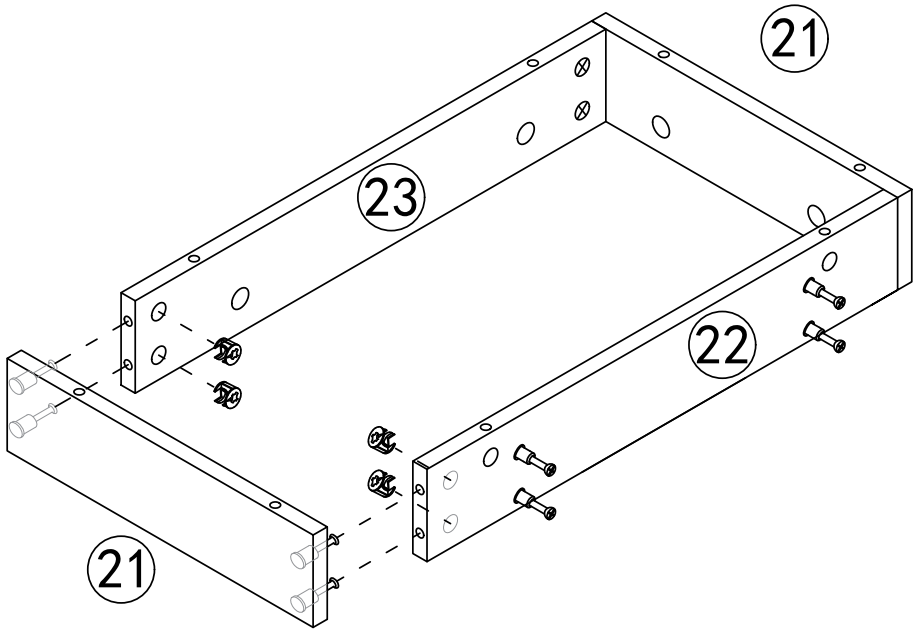

Step 63

B x8

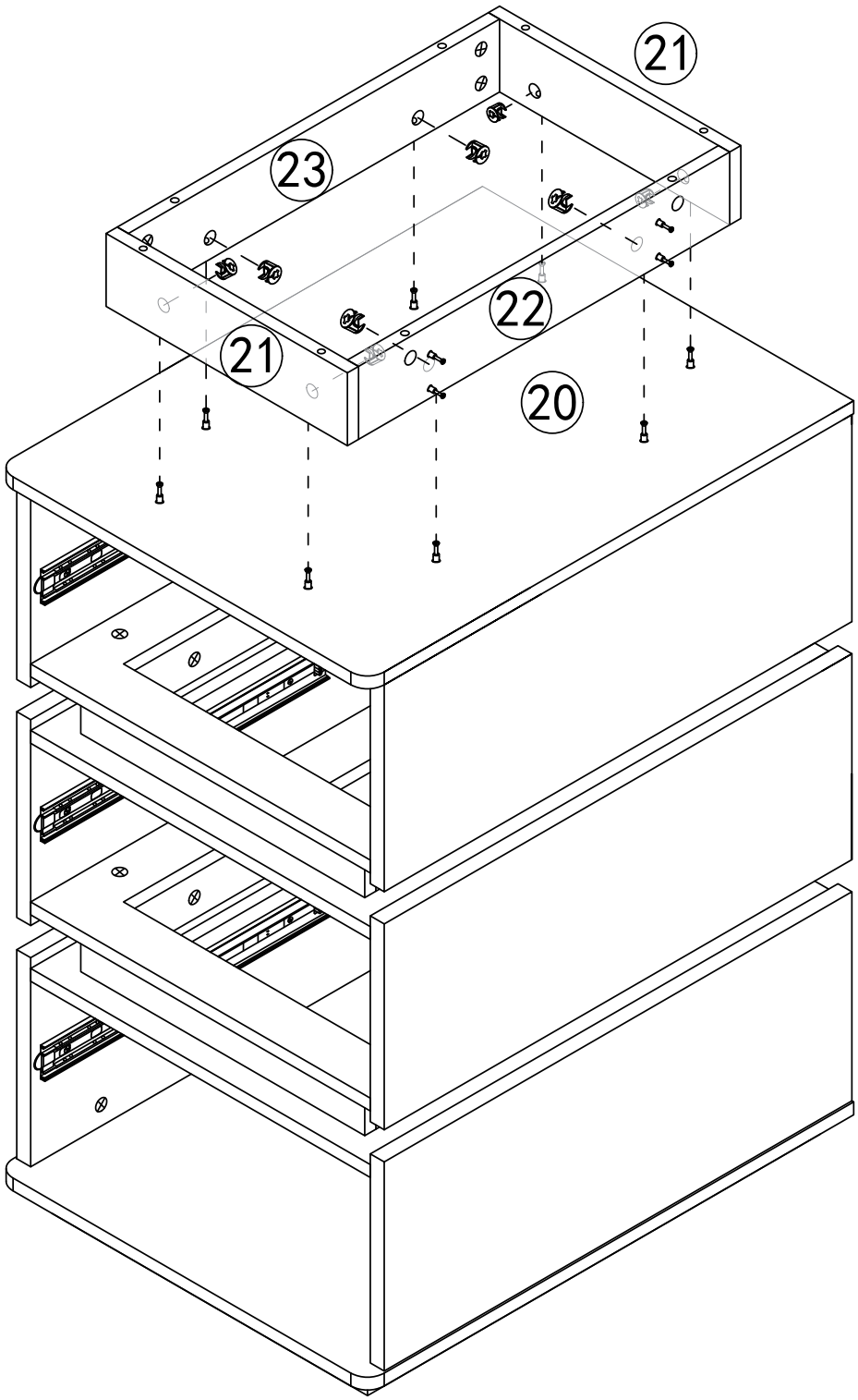

Step 64

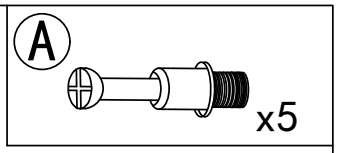

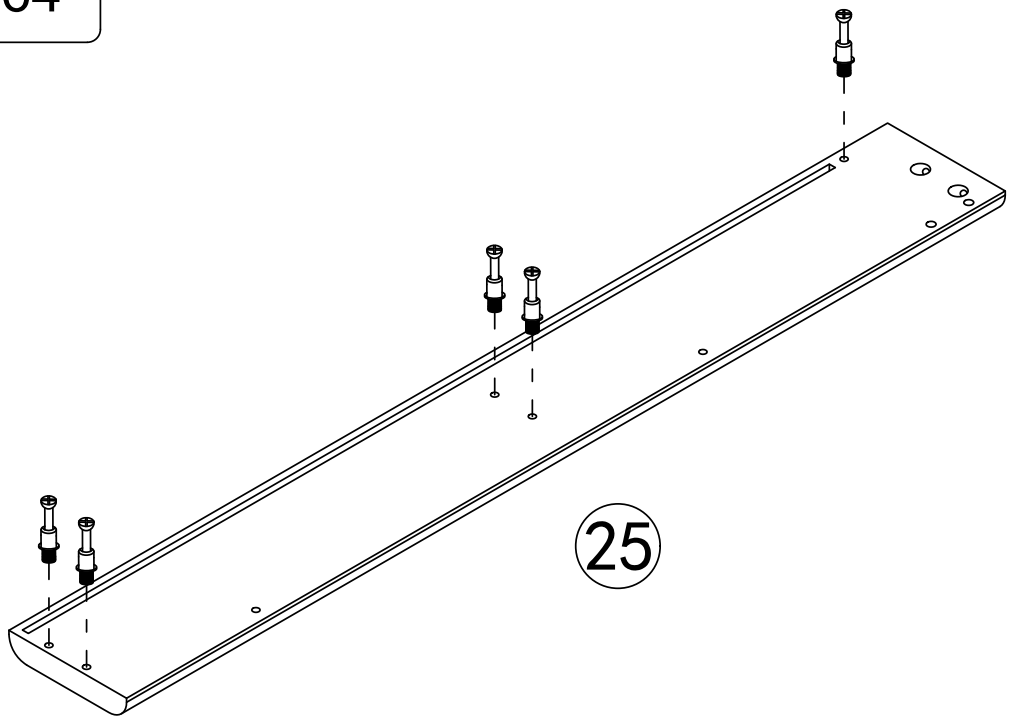

Step 65

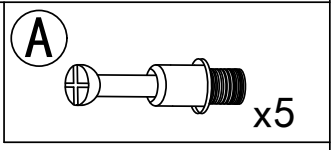

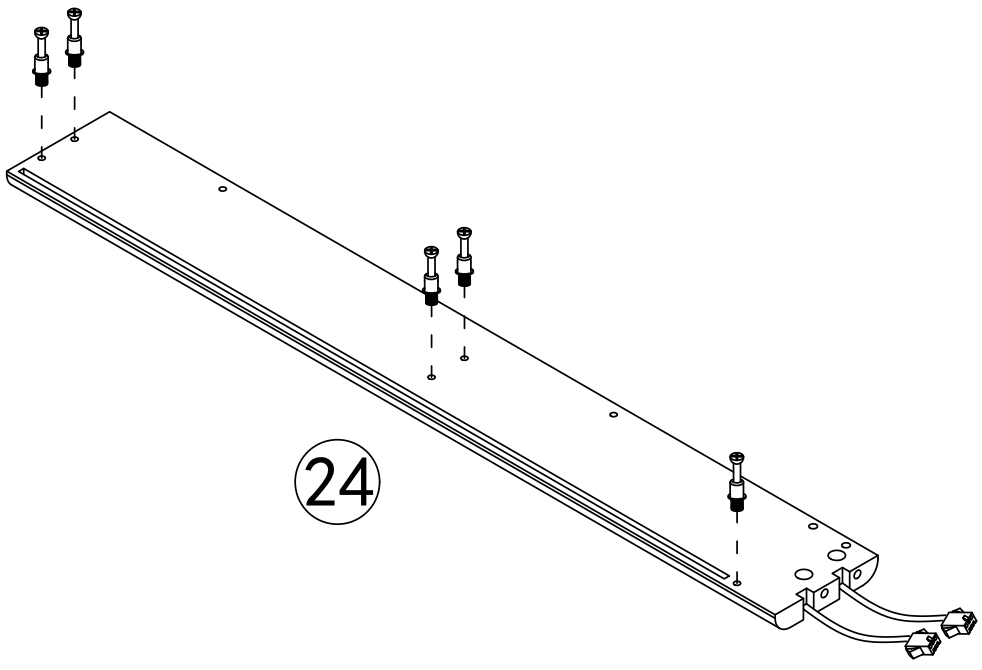

Step 66

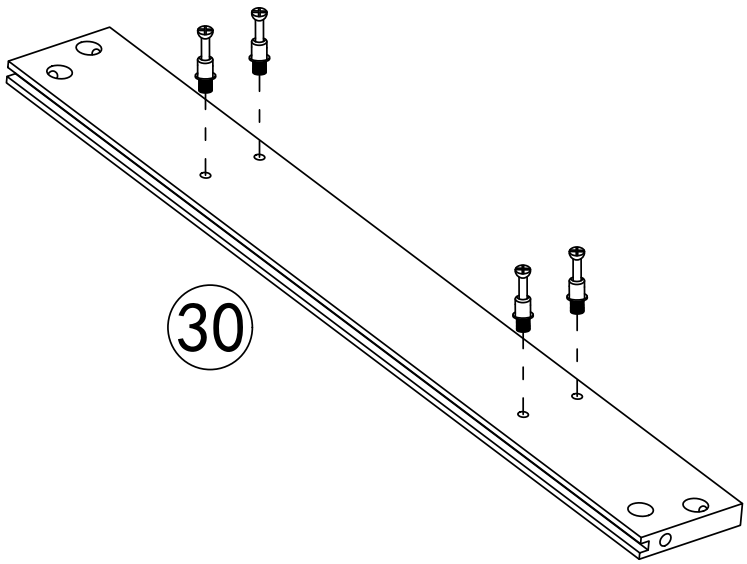

Step 67

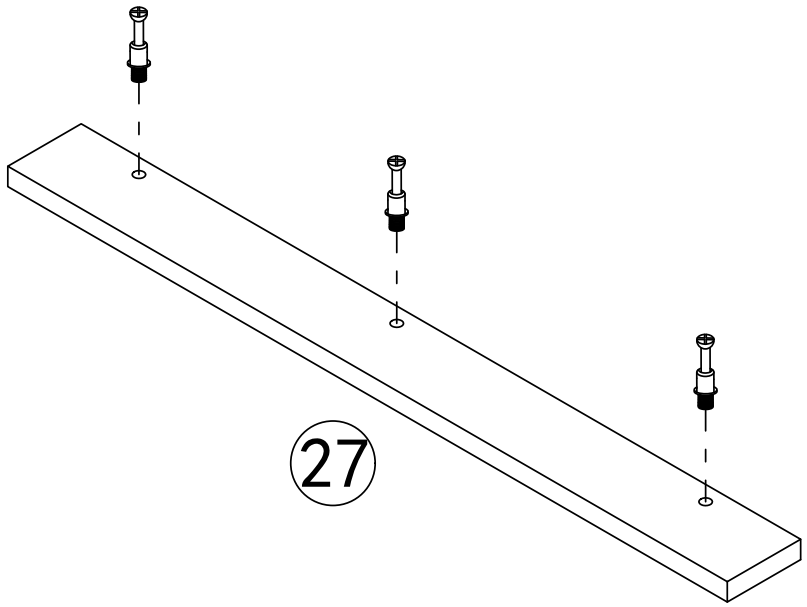

x2

Step 68

B x3

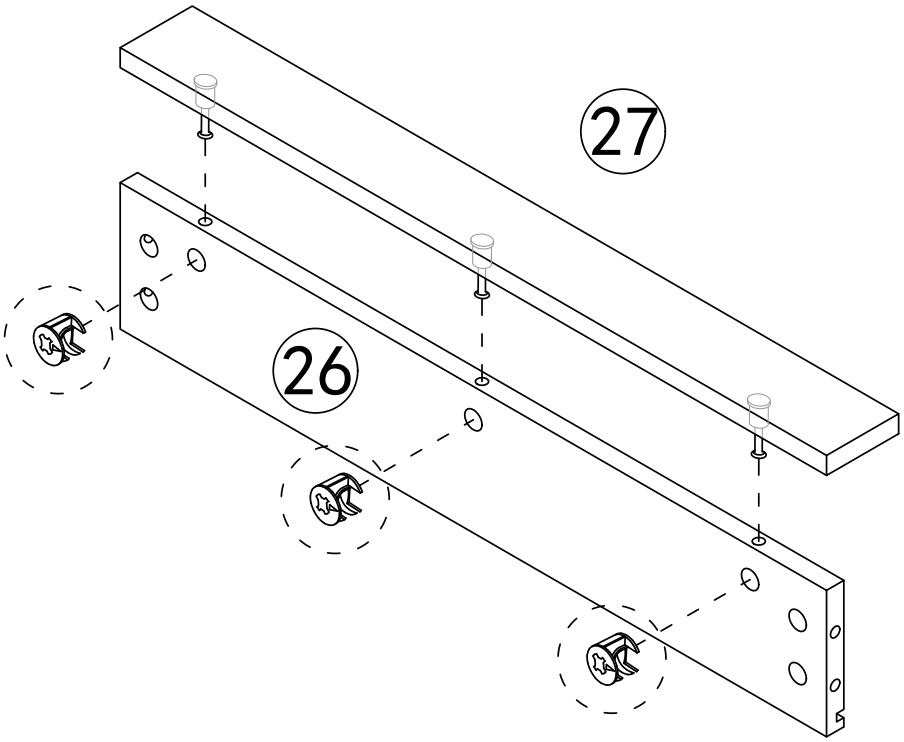

Step 69

B x3

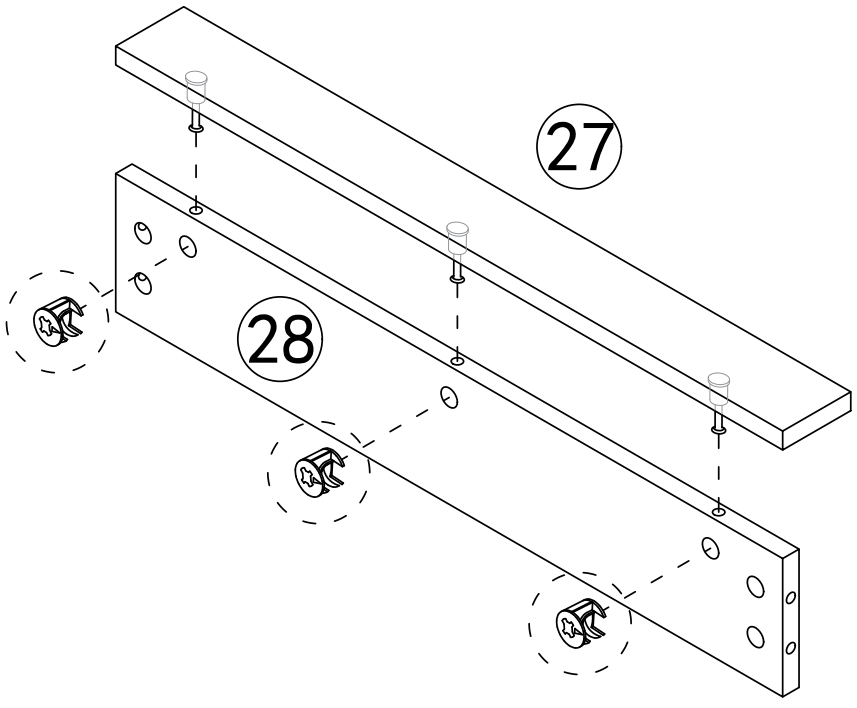

Step 70

B x2

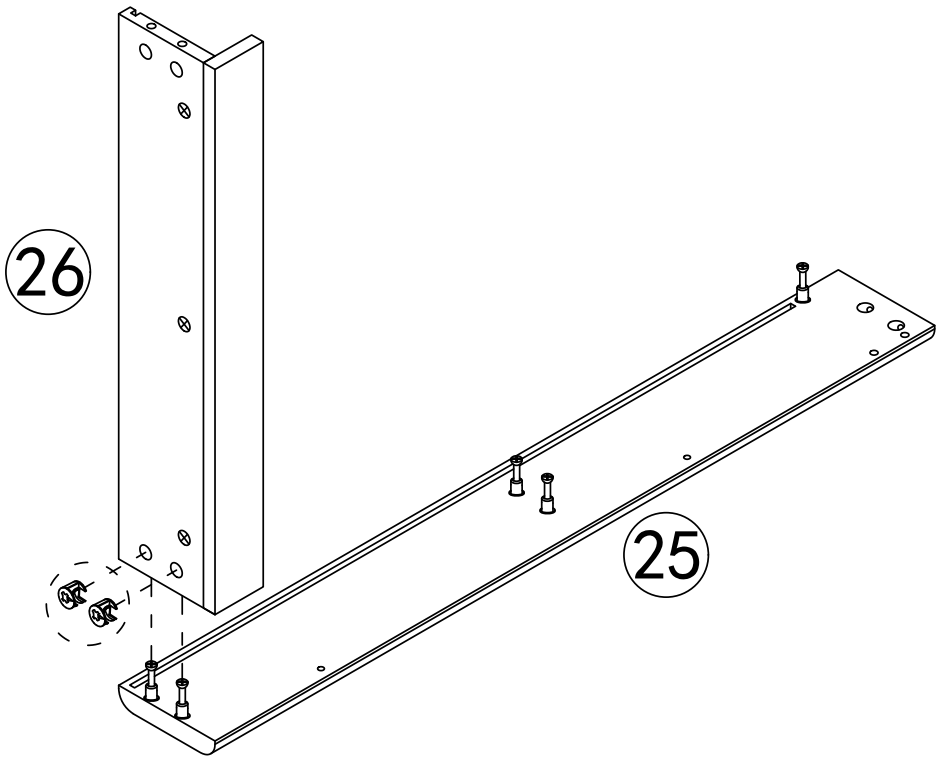

Step 71

B x2

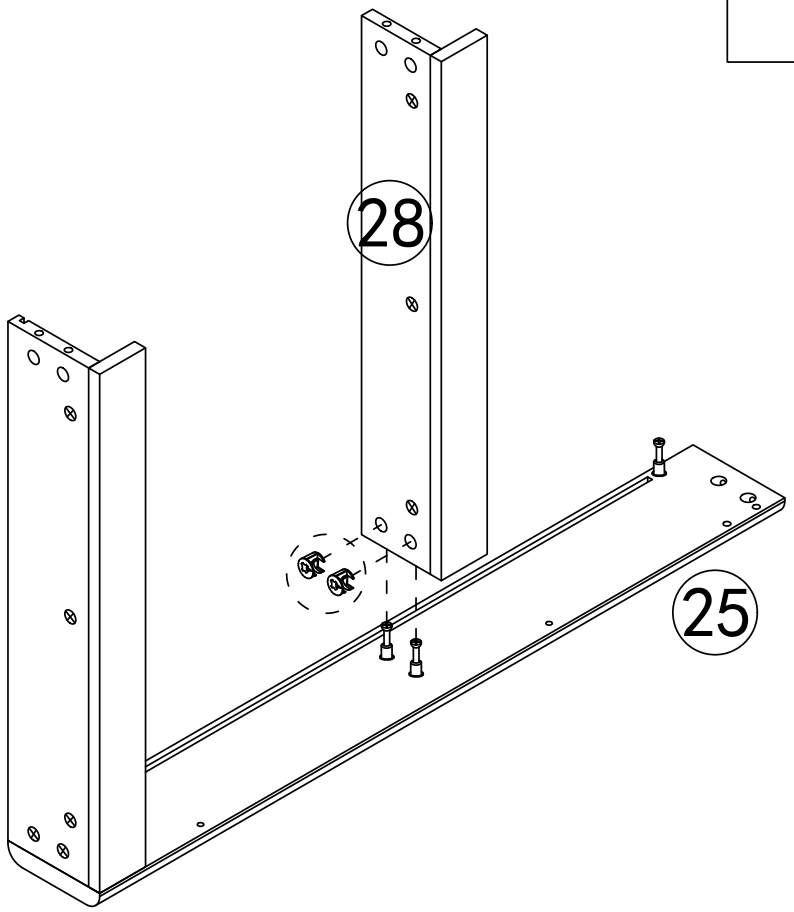

Step 72

B x1

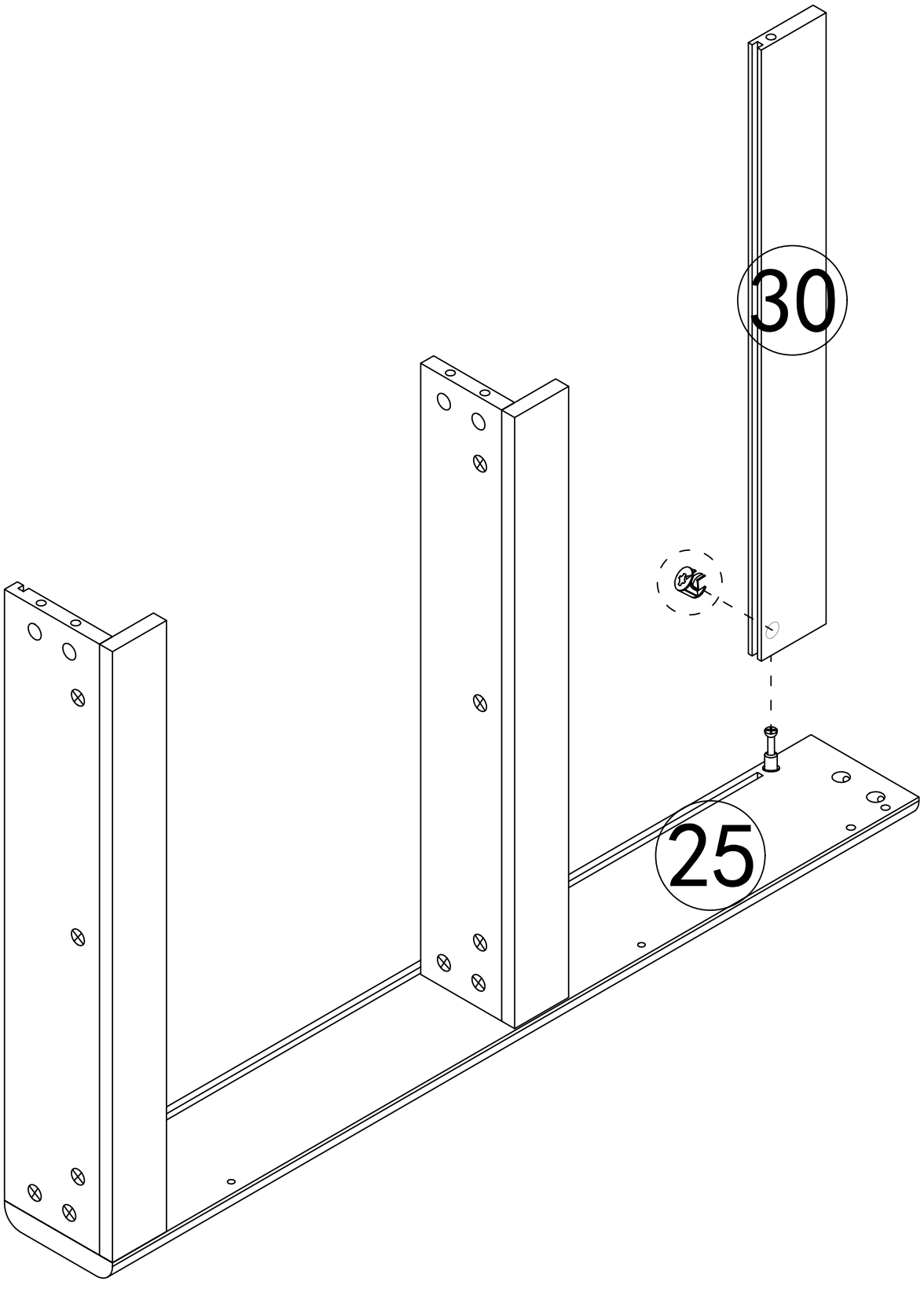

Step 73

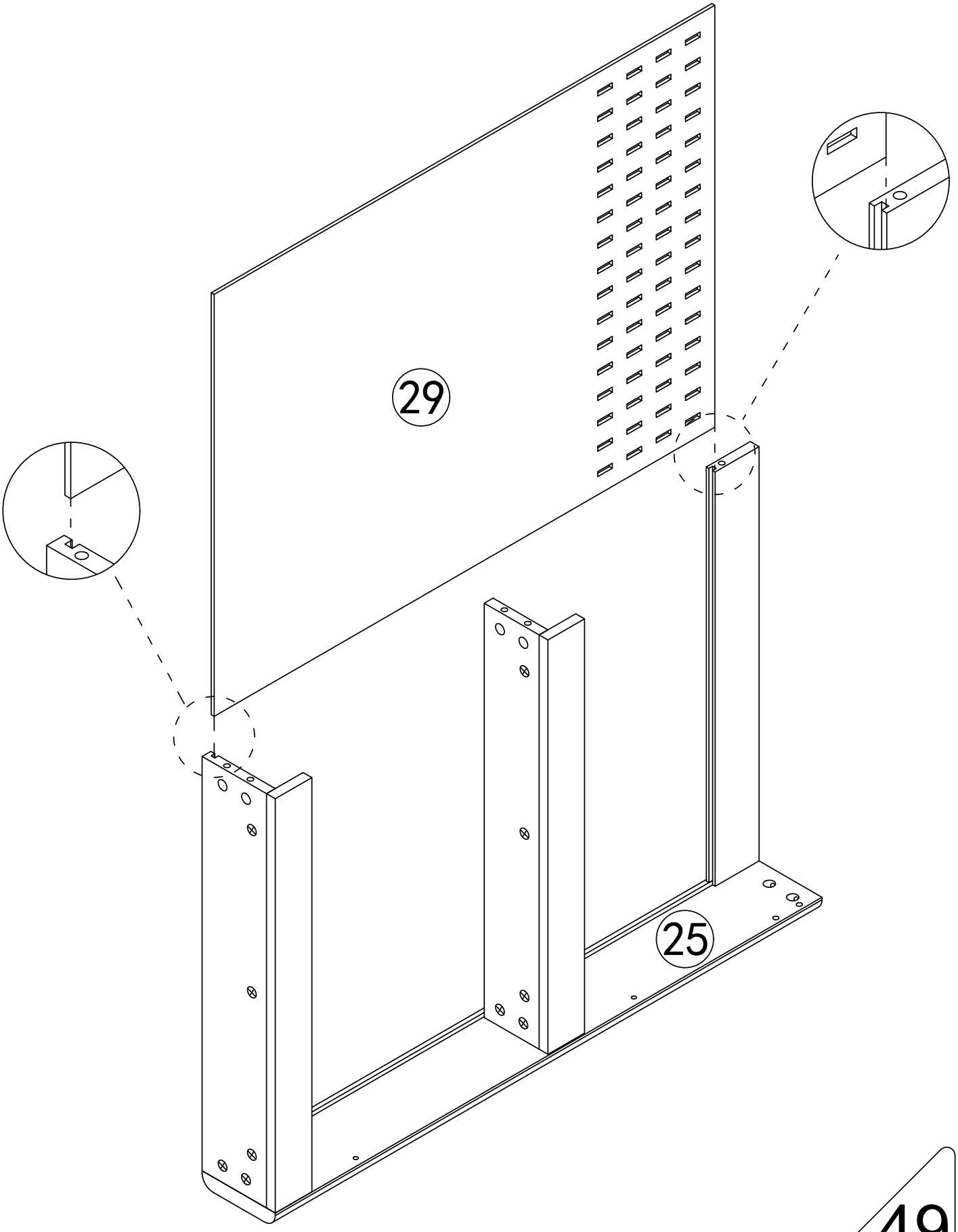

Step 74

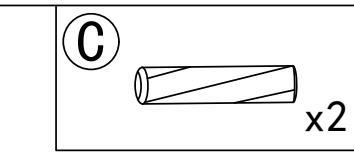

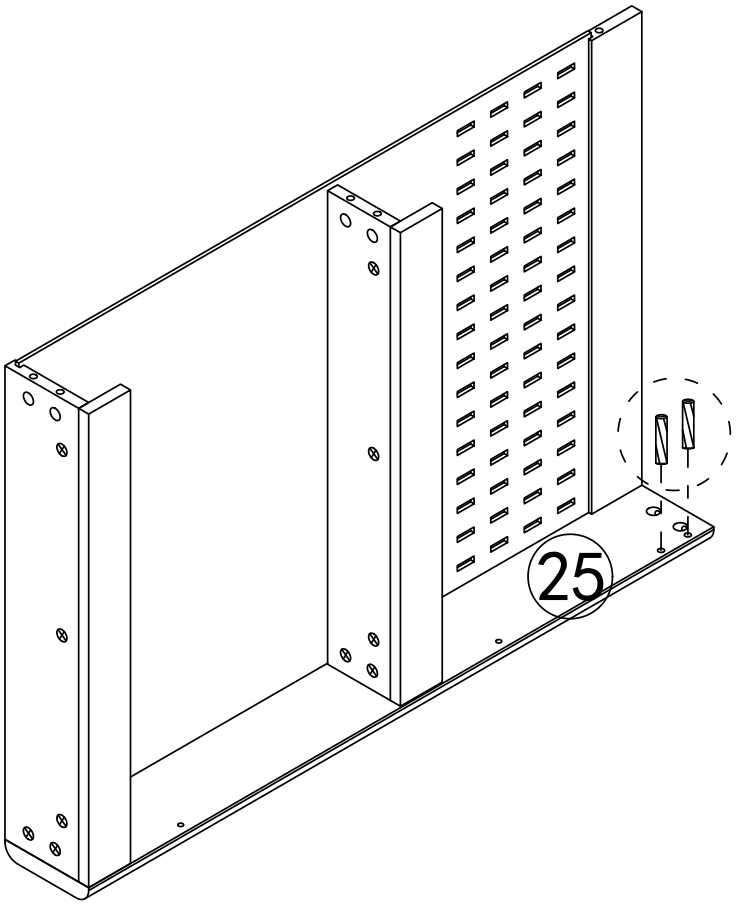

Step 75

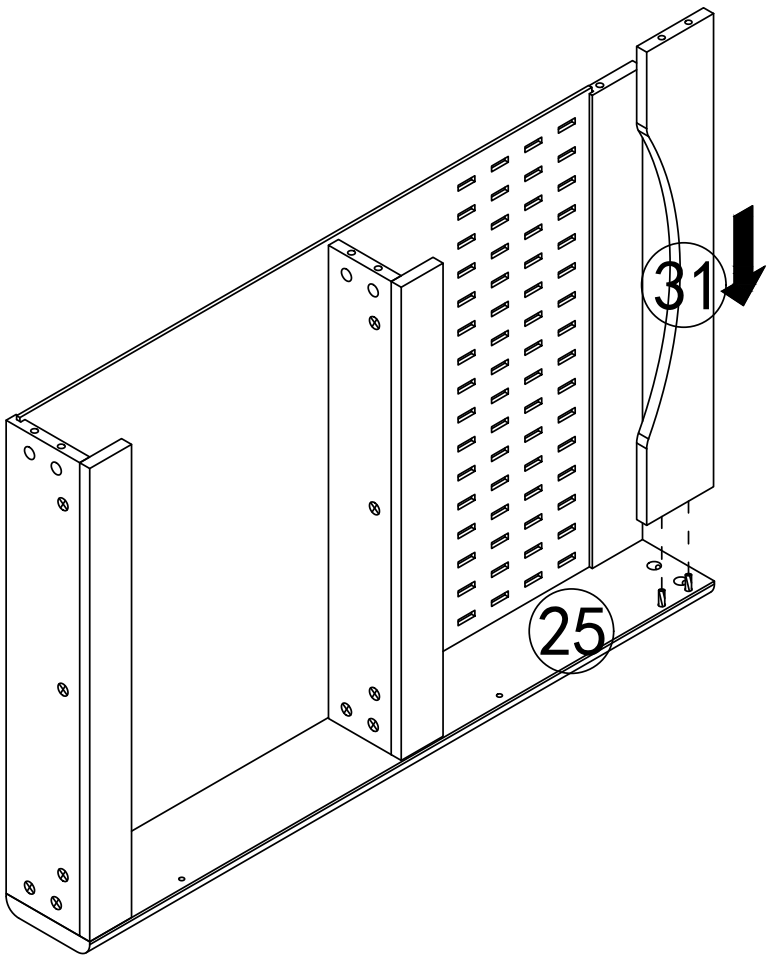

Step 76

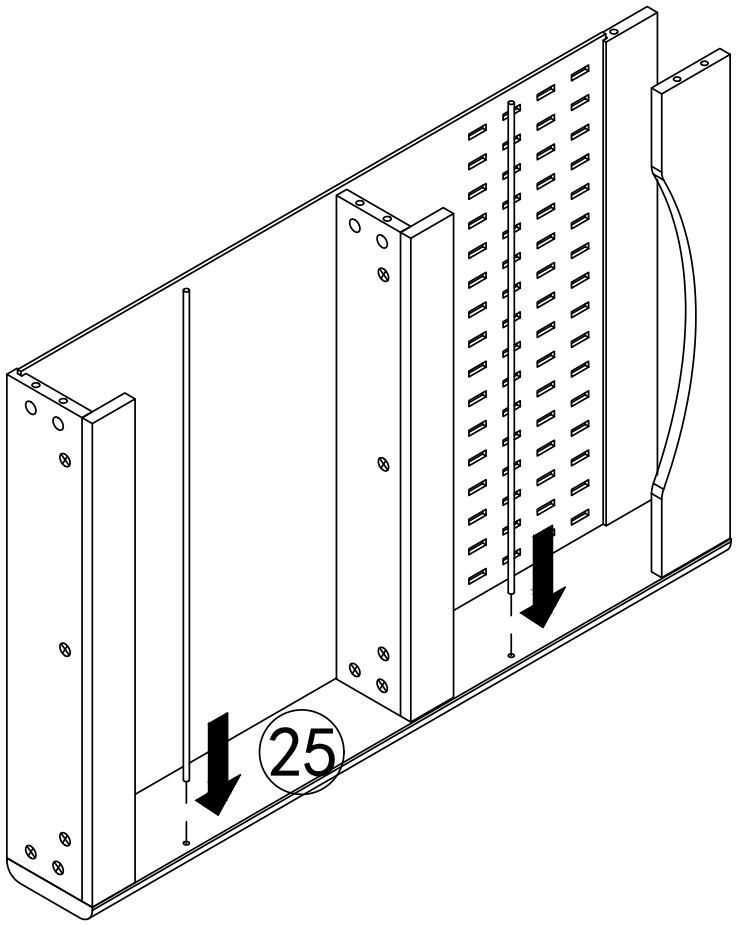

G x2

Step 77

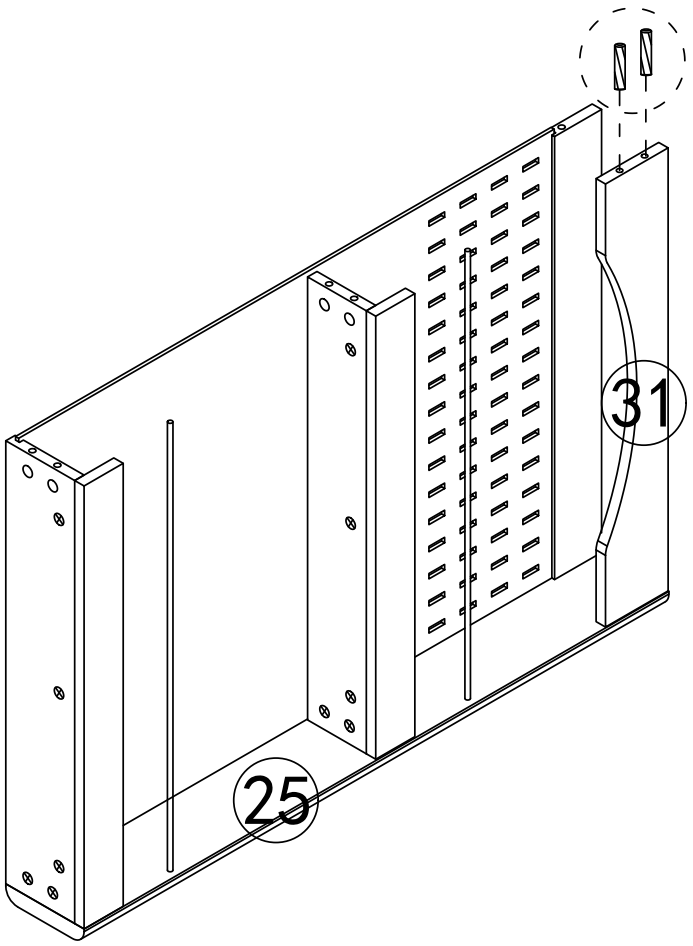

C x2

Step 78

B x5

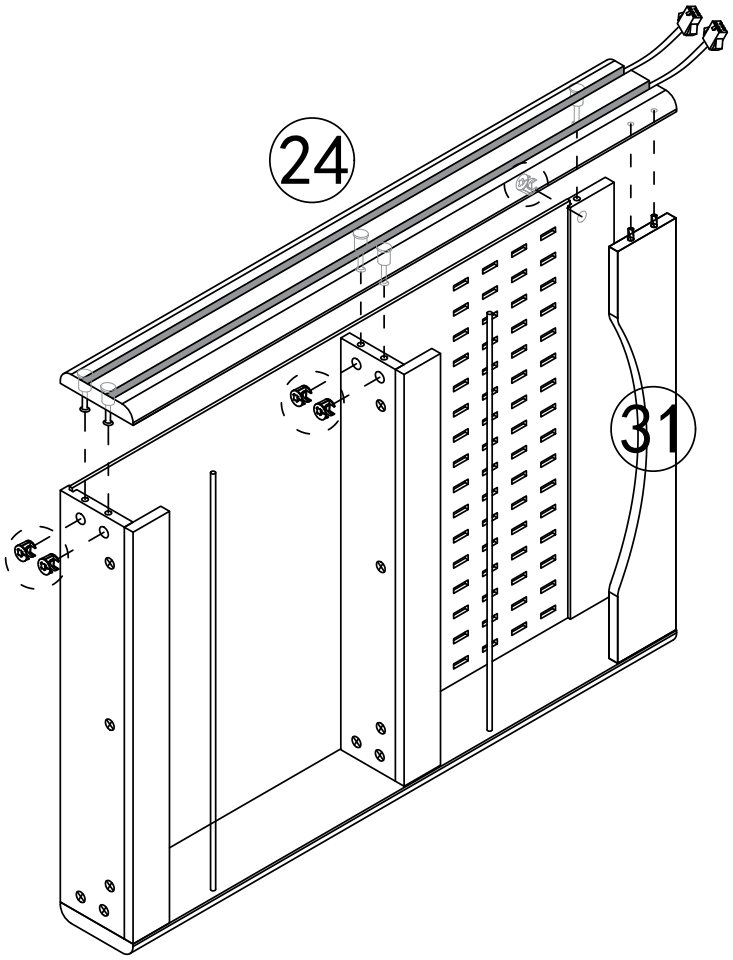

Step 79

D x2

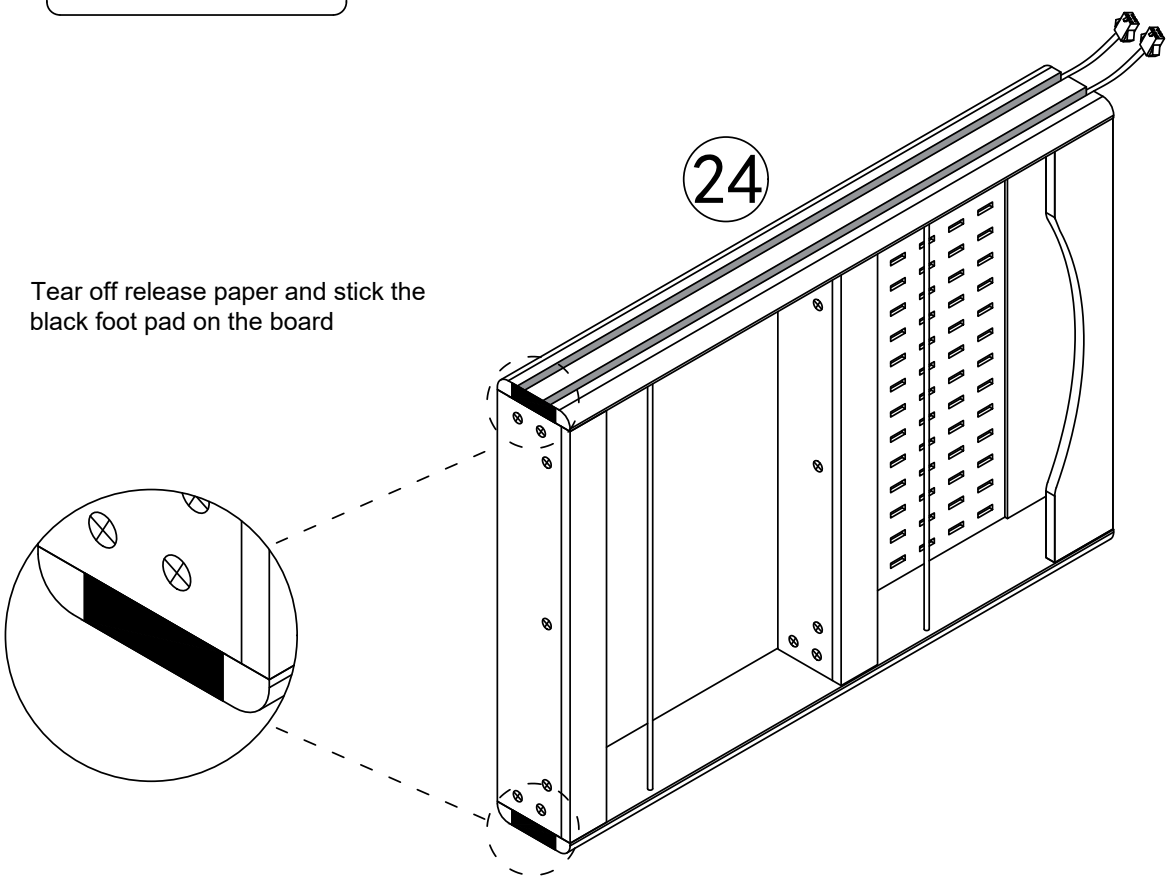

Tear off release paper and stick the black foot pad on the board

Step 80

B x4

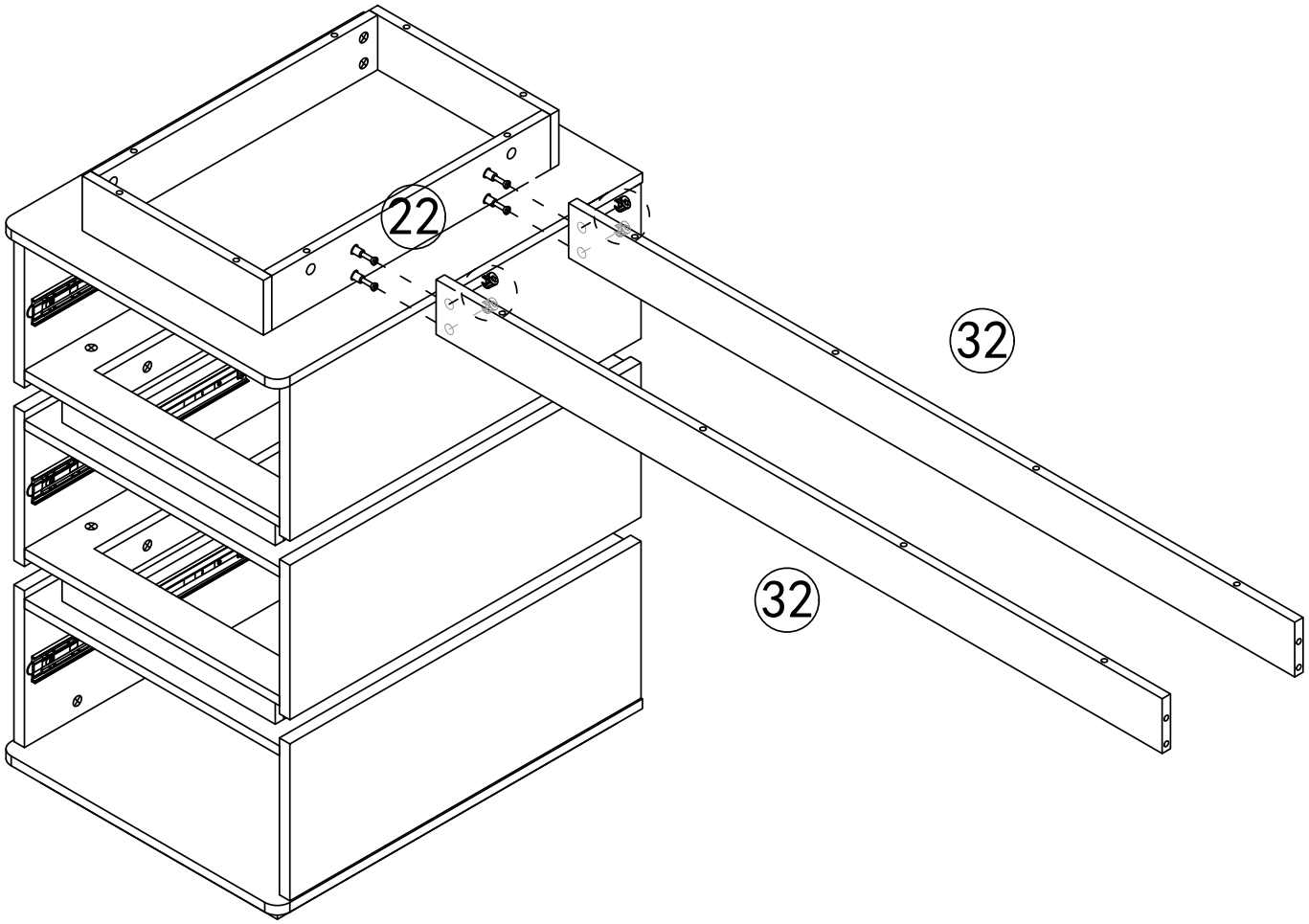

Step 81

B x4

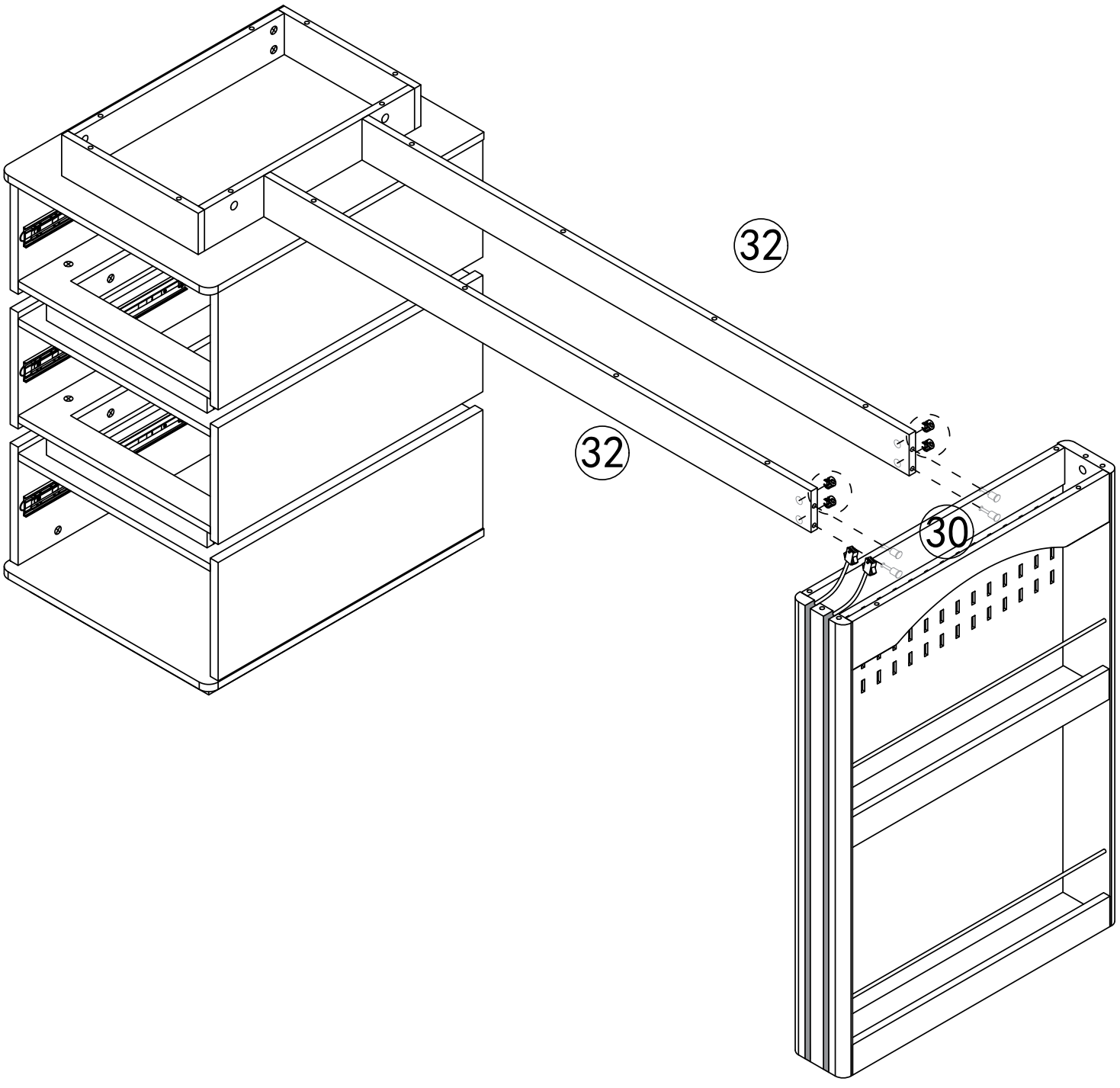

Step 82

C x6

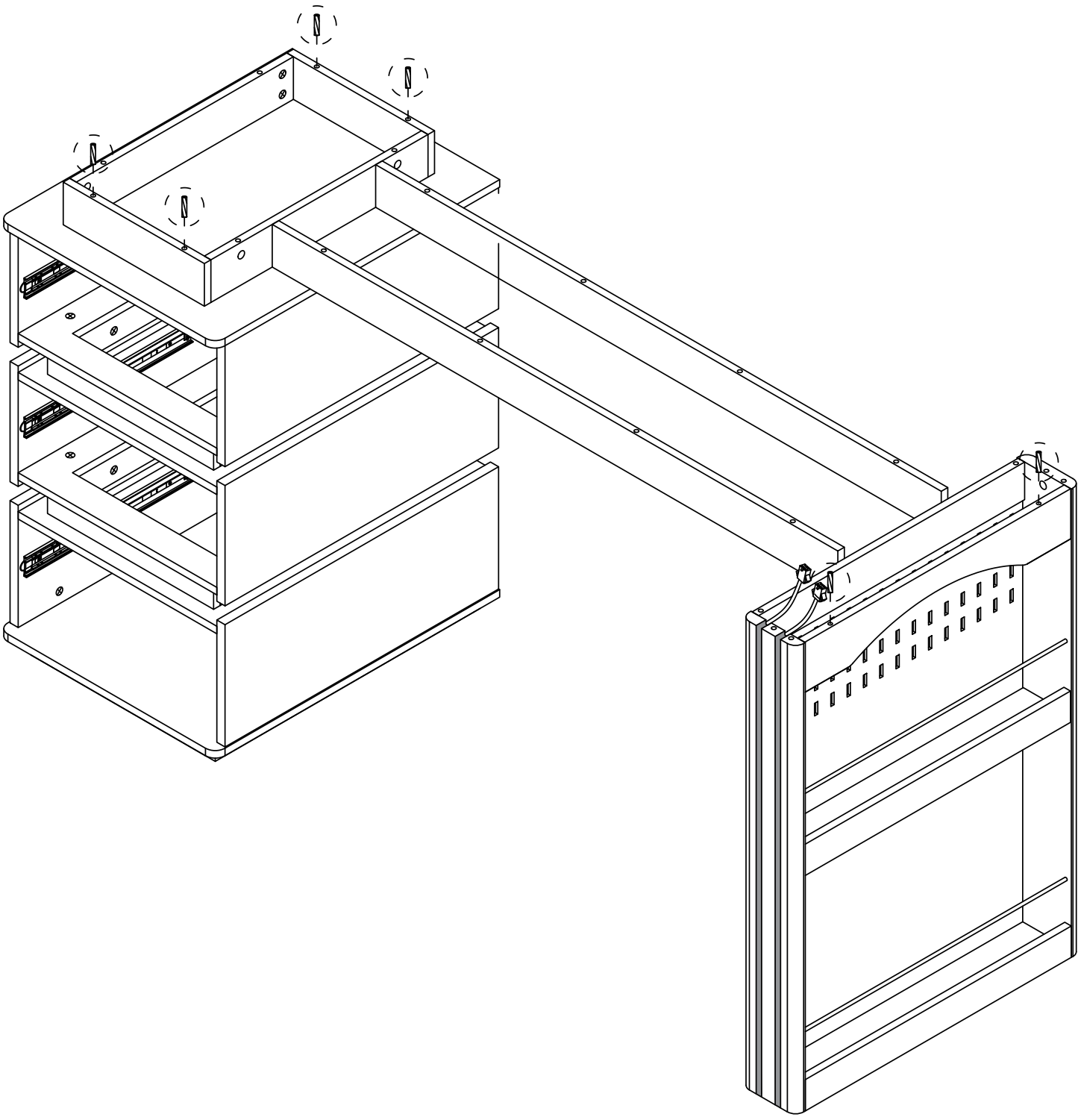

Step 83

Ⓕ x1

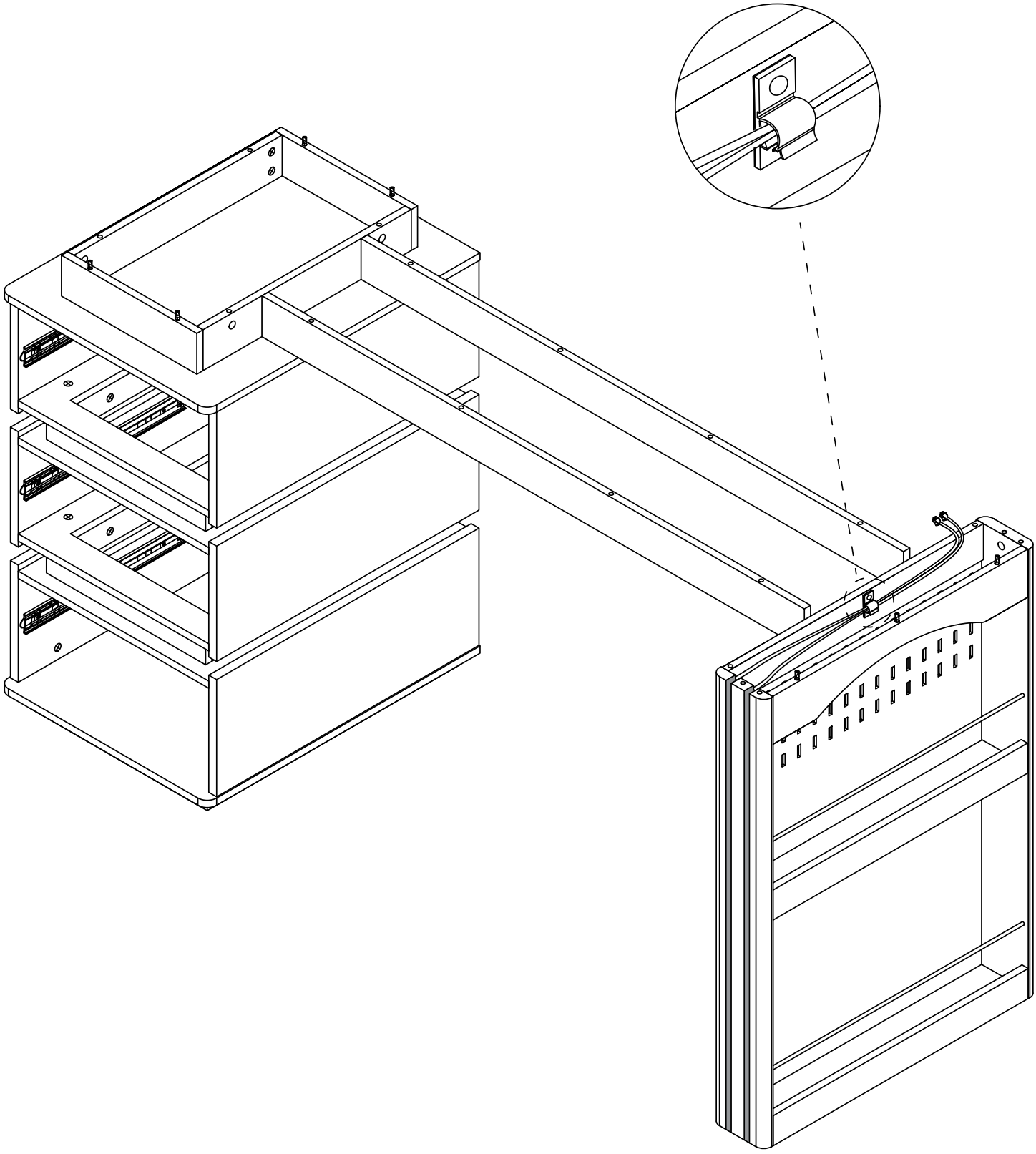

Step 84

Ⓕ x3

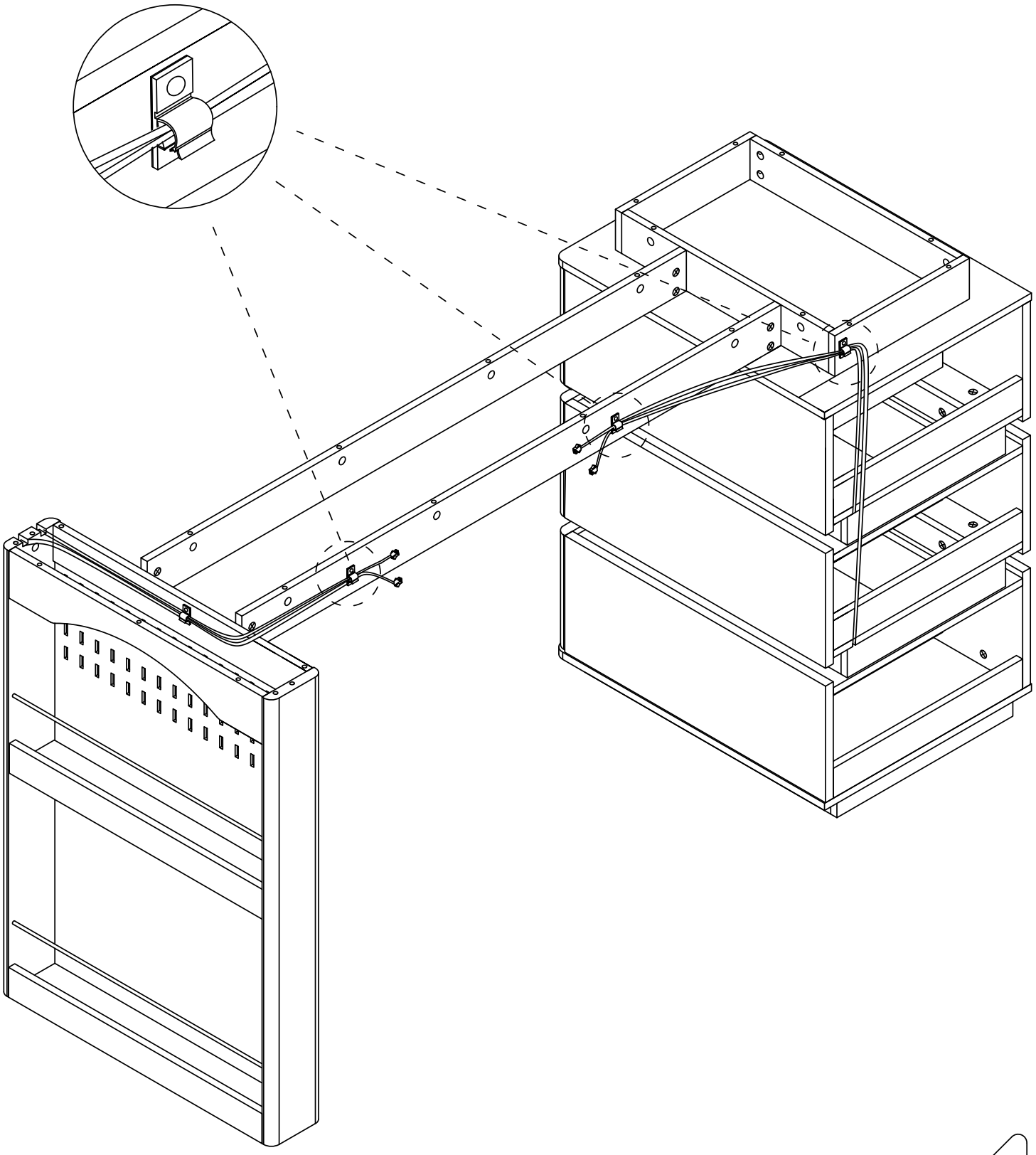

Step 85

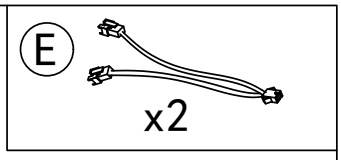

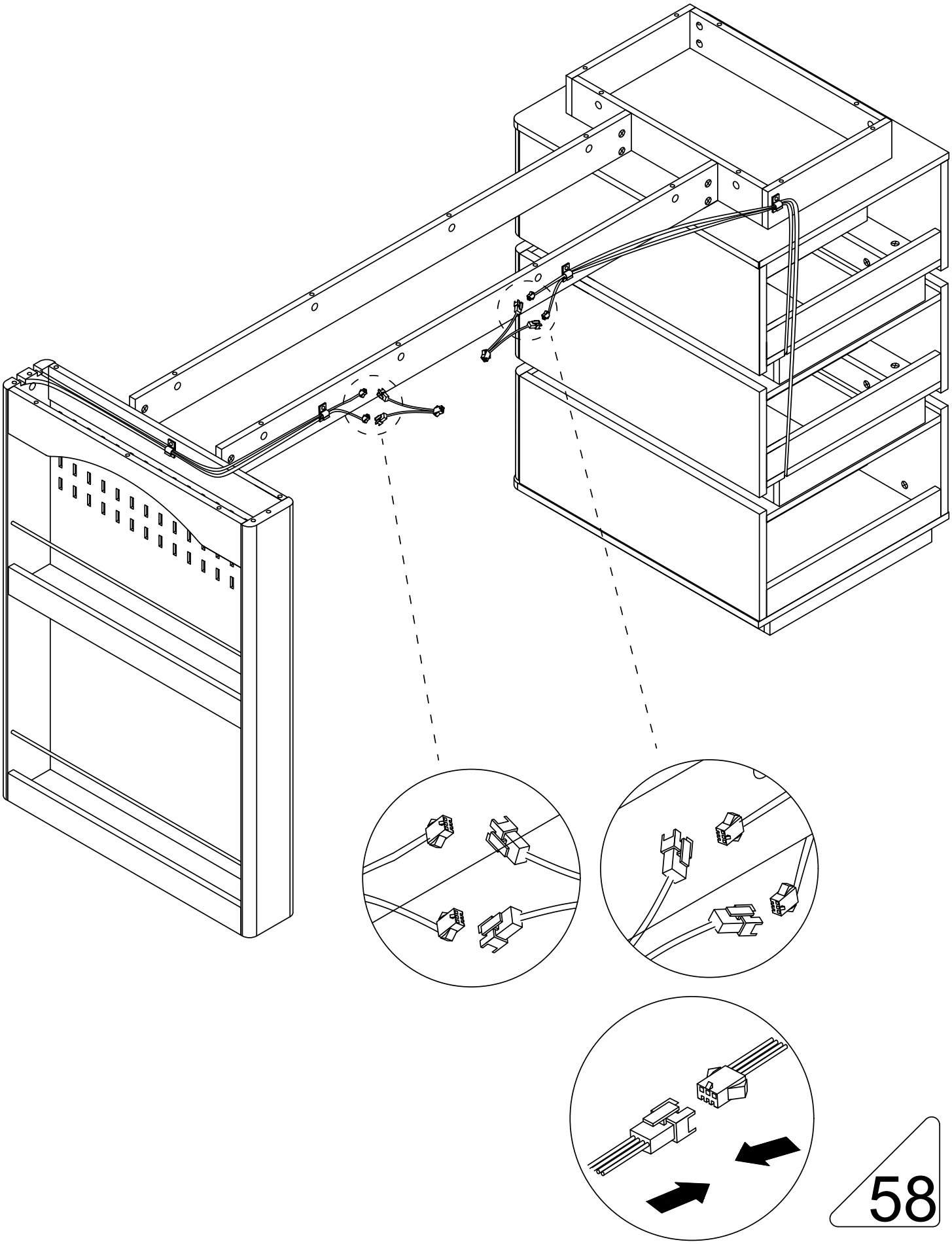

Step 86

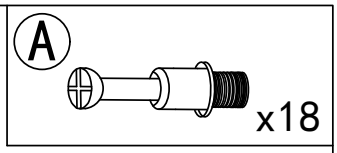

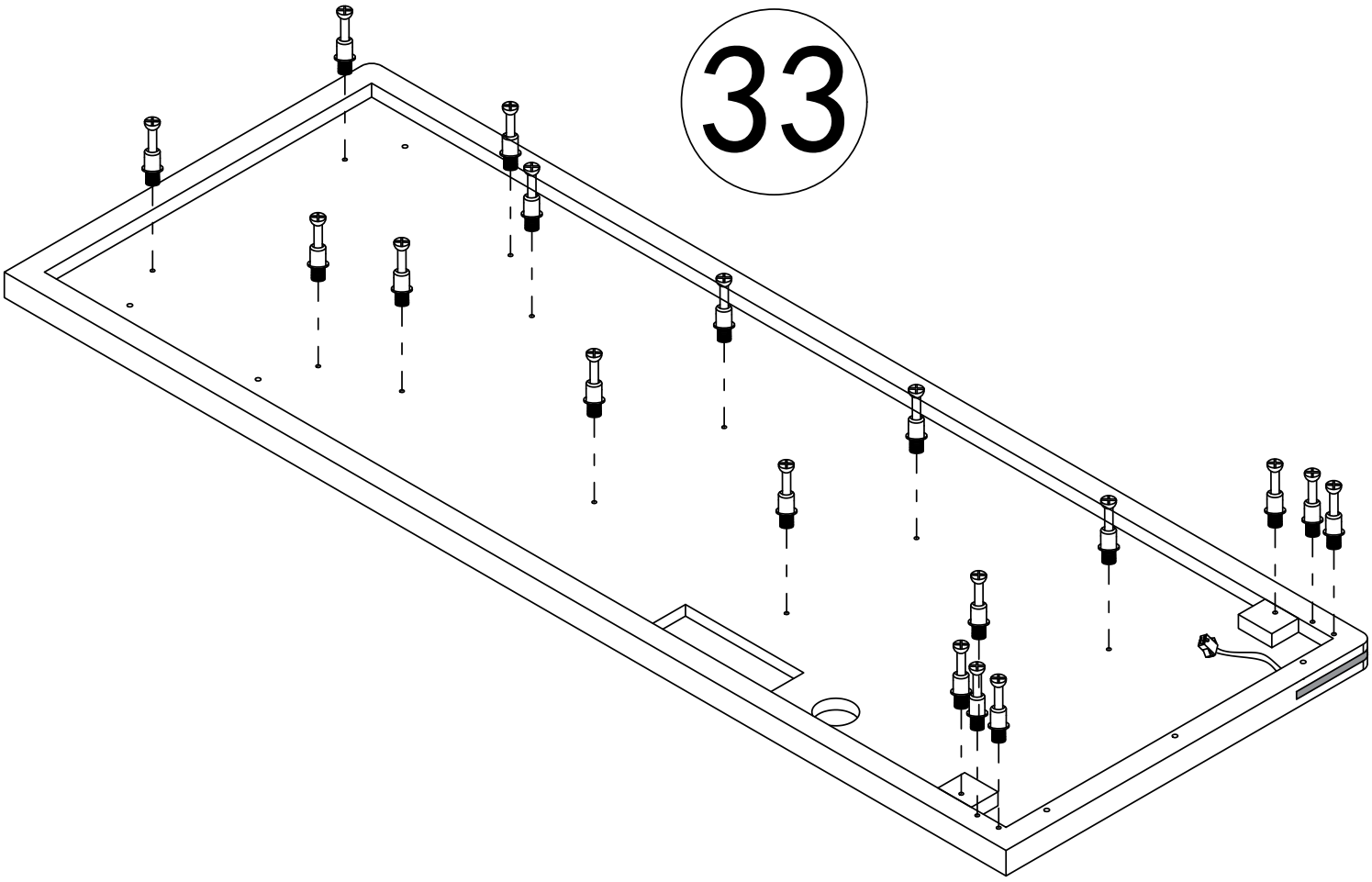

Step 87

Ⓐ x18

When installing, be sure to orient the connection cable inward, and make sure it passes through the wire loop on board 30.

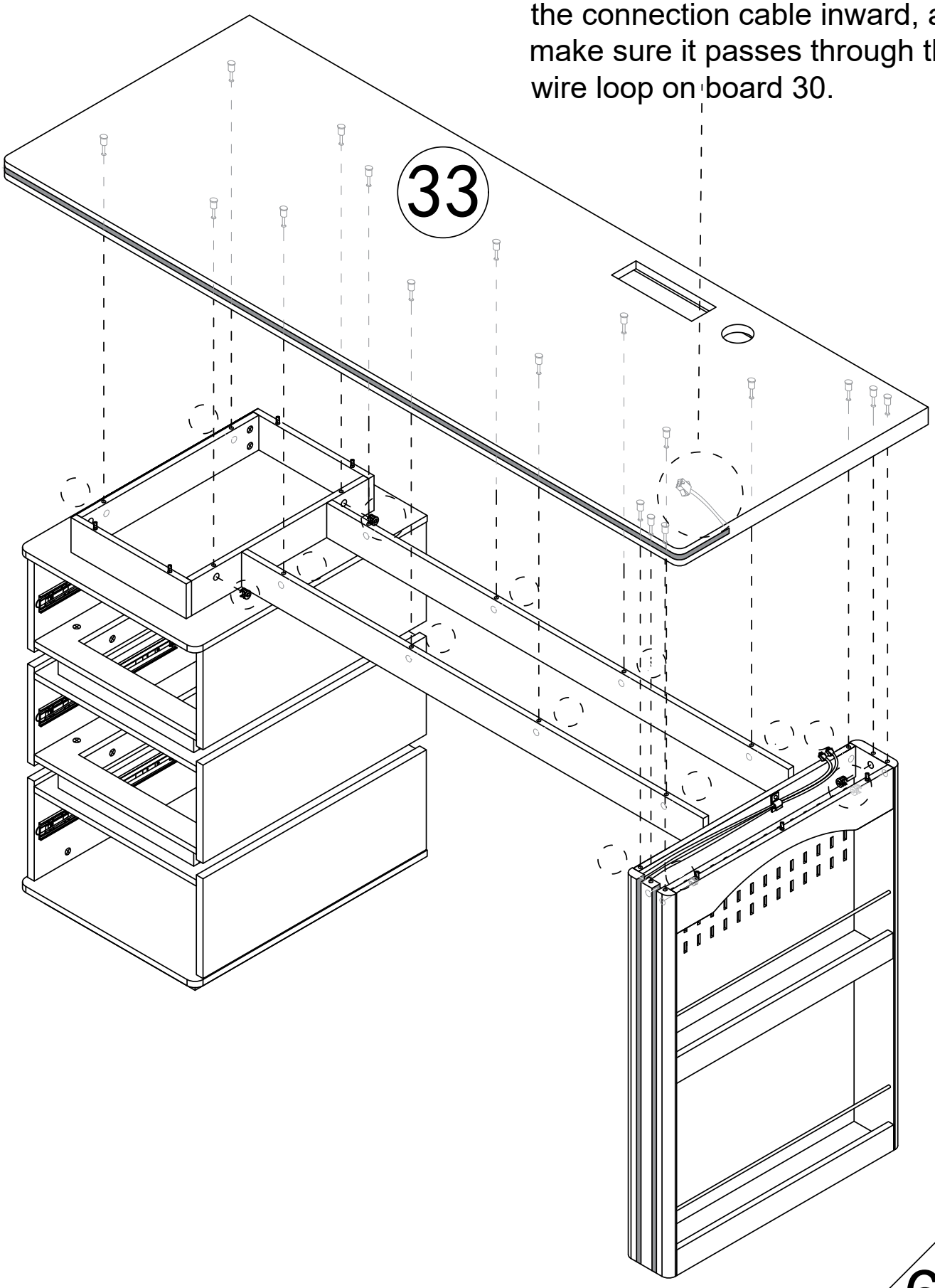

Step 8

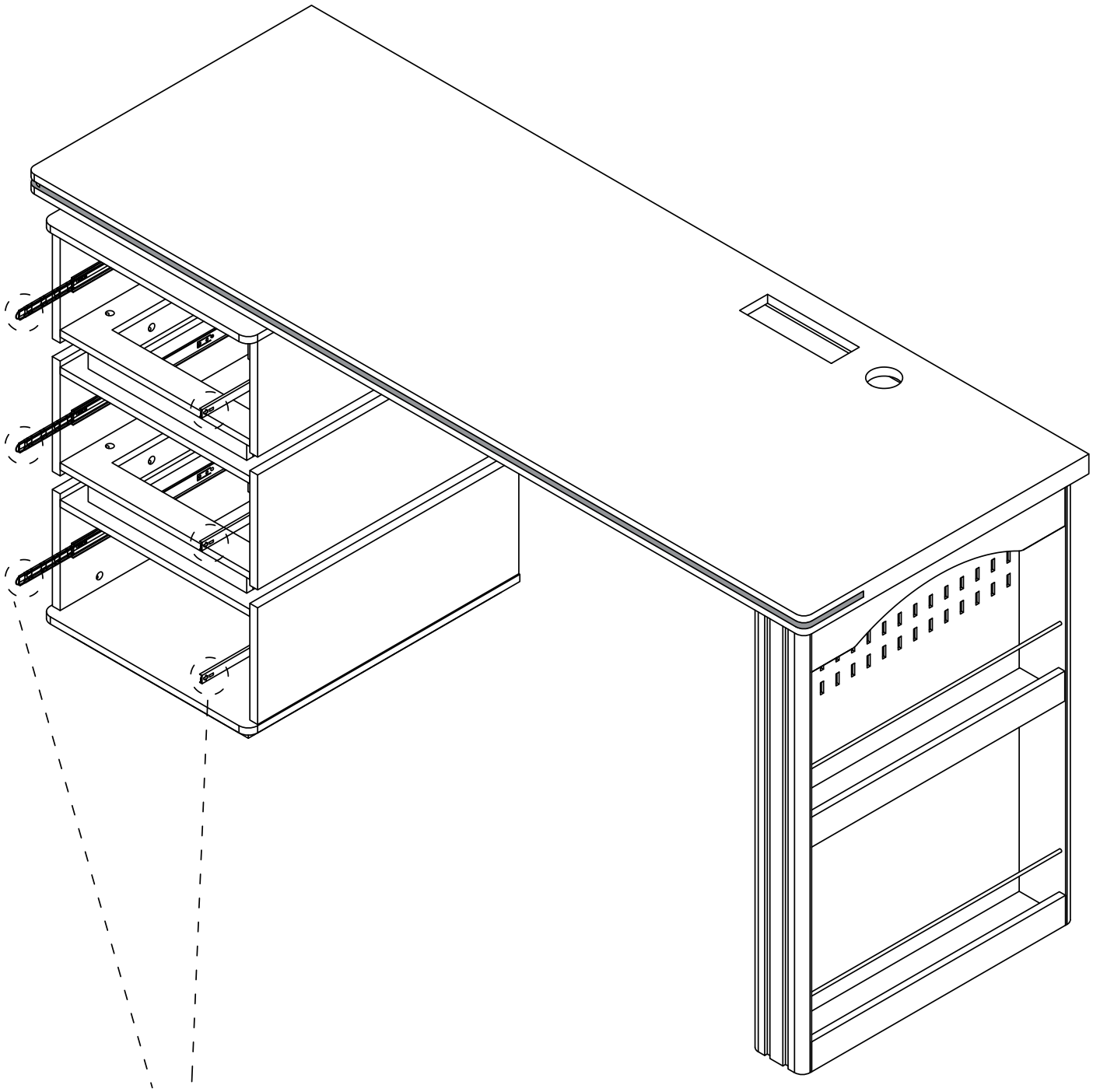

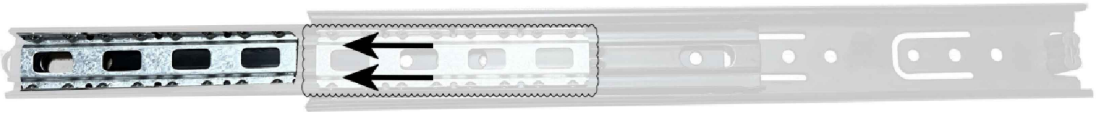

As shown，When installing the drawer,
pull the guide rail out first, Slide beads are also pulled out.

Step 89

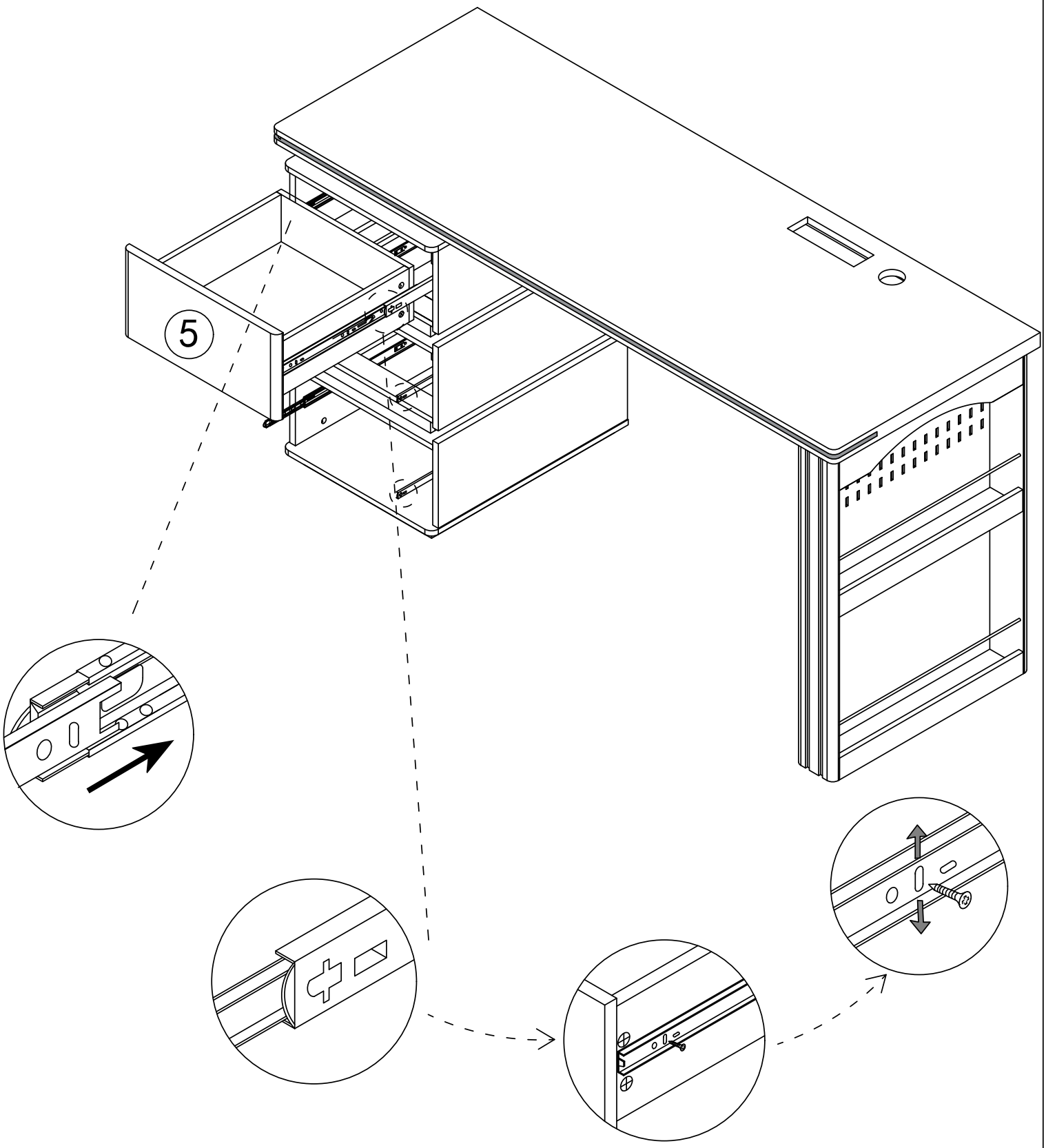

If a large gap is found after installing the drawer the slide rail can be moved up and down to adjust the gap

Step 90

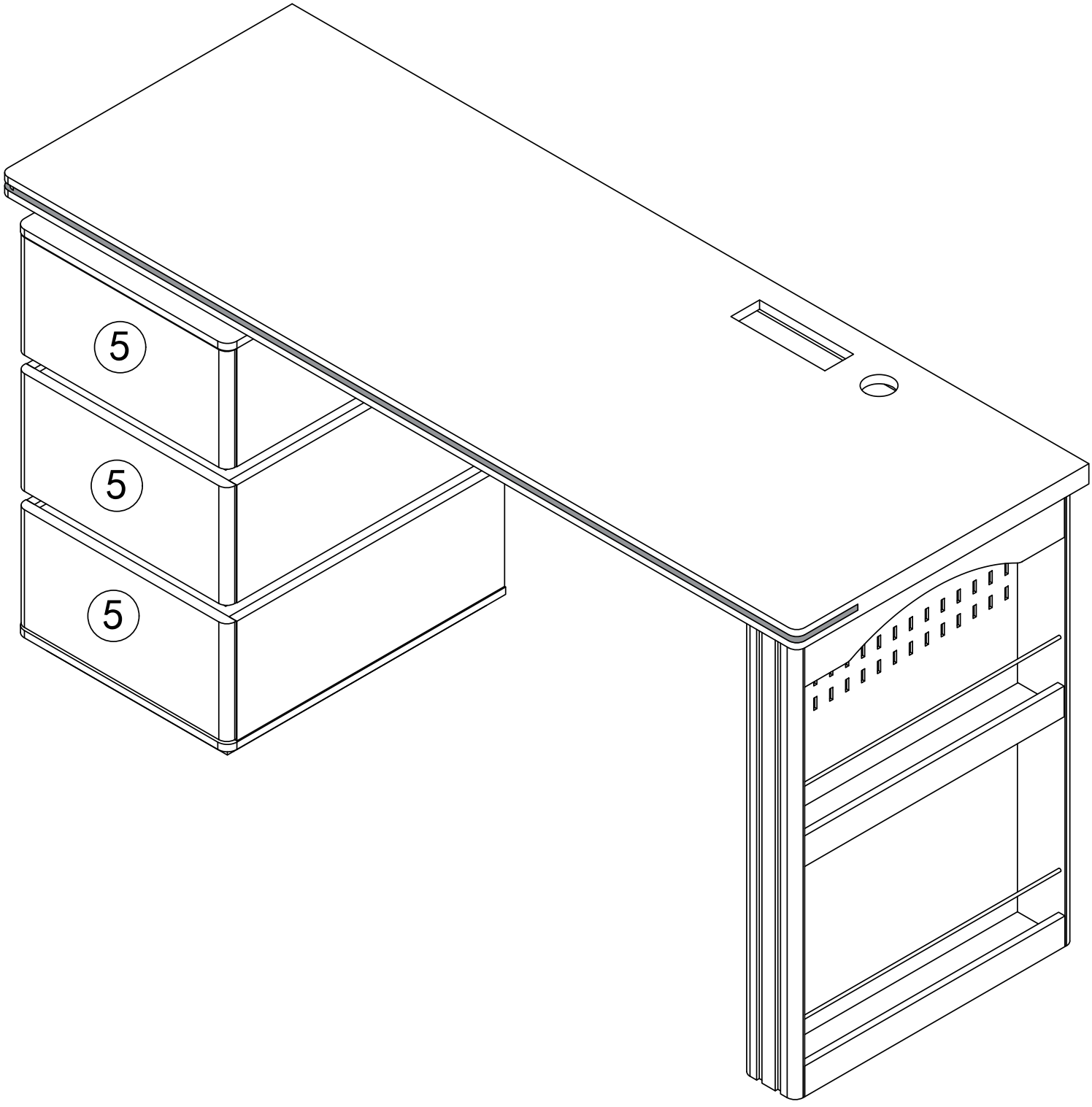

Repeat the drawer installation steps

Step 91

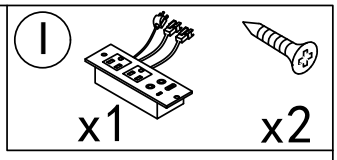

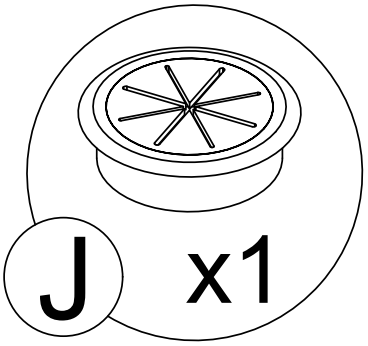

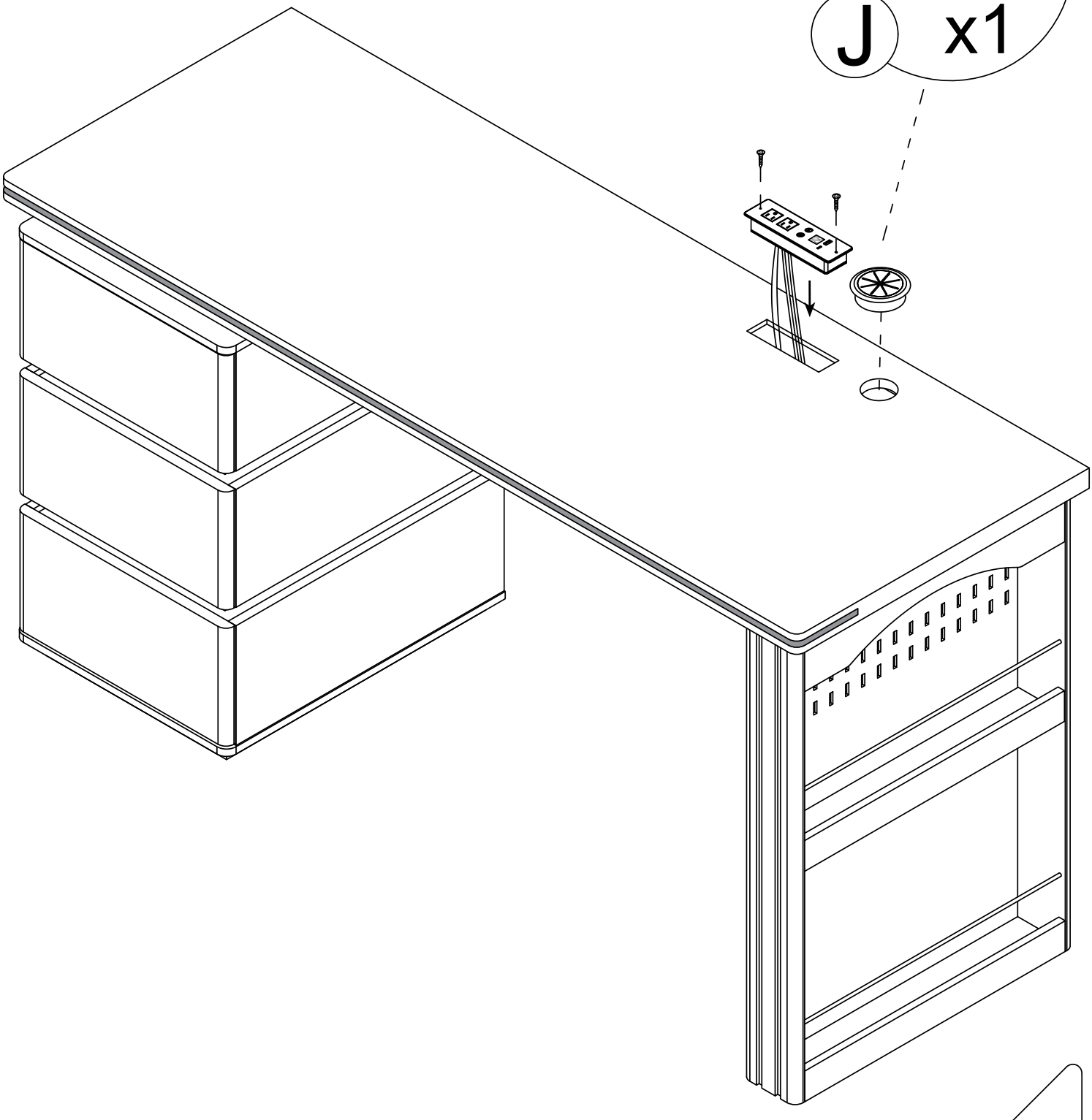

Step 92

E

x1

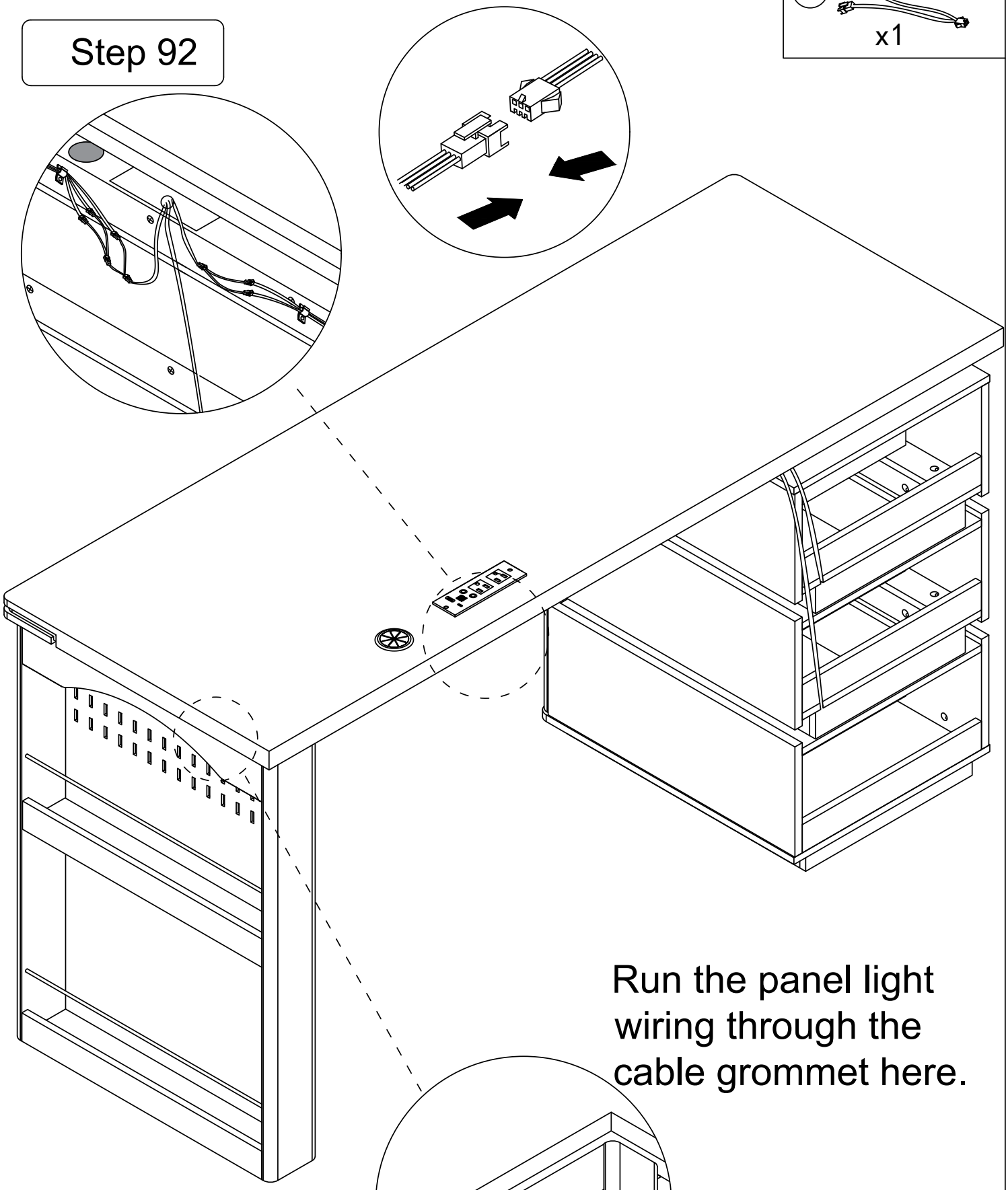

Run the panel light wiring through the cable grommet here.

Step 93

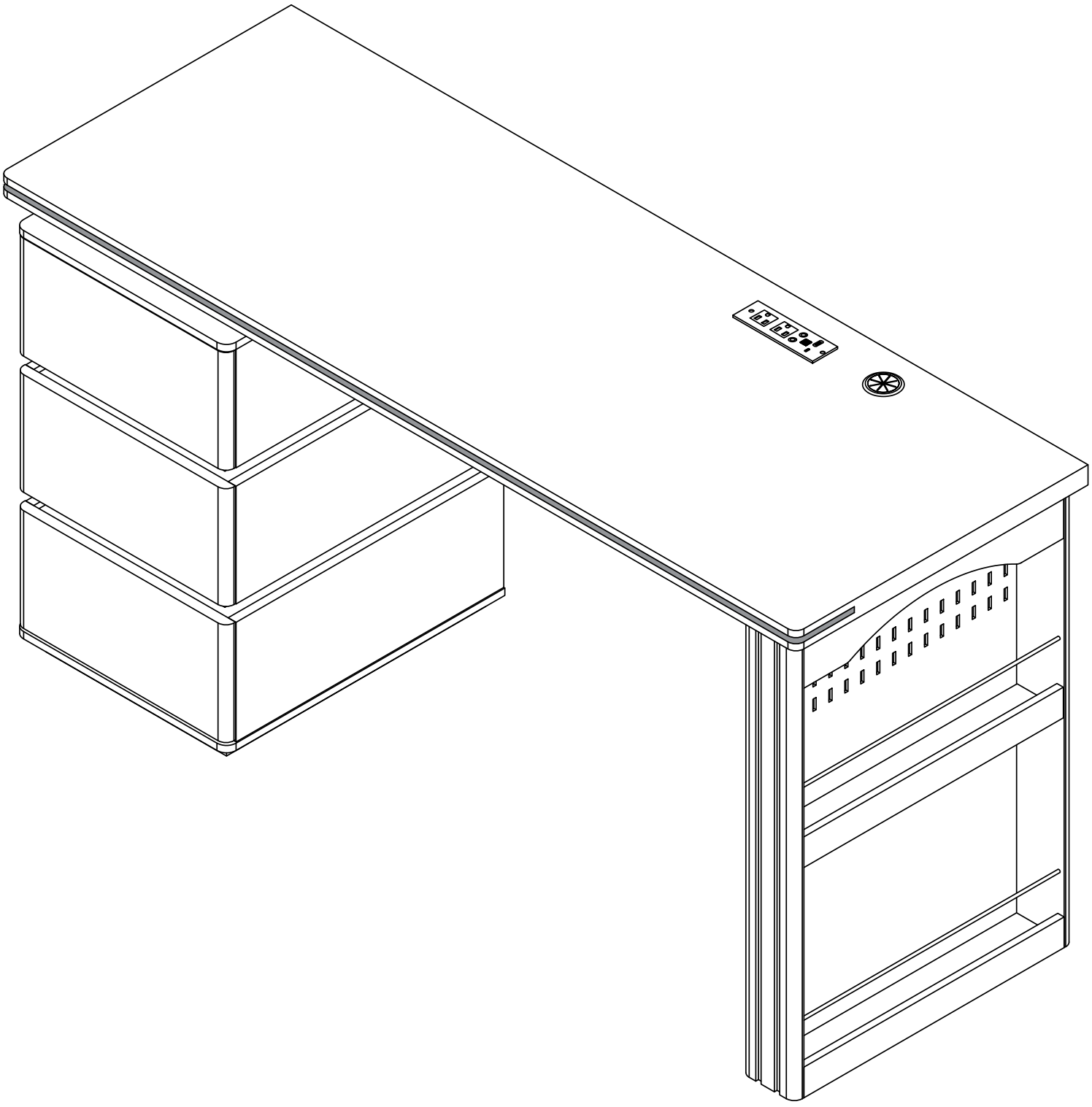

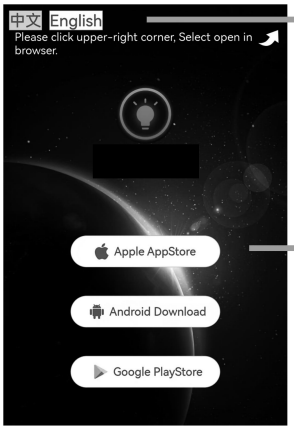

Select English Language

Select the corresponding device to download.
Note: If the download fails,
please turn off the "Enhanced Protection"
in the Pure Mode settings of the device.

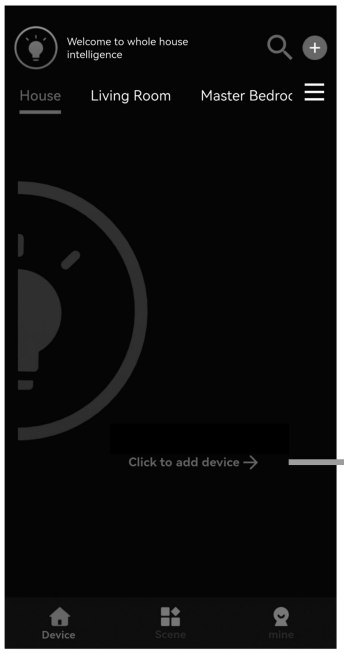

①

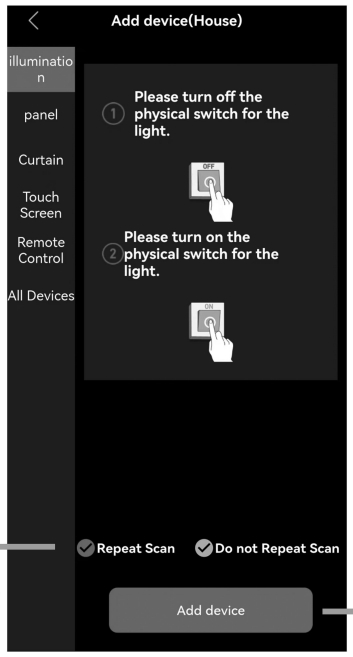

②

It turns blue after clicking

③

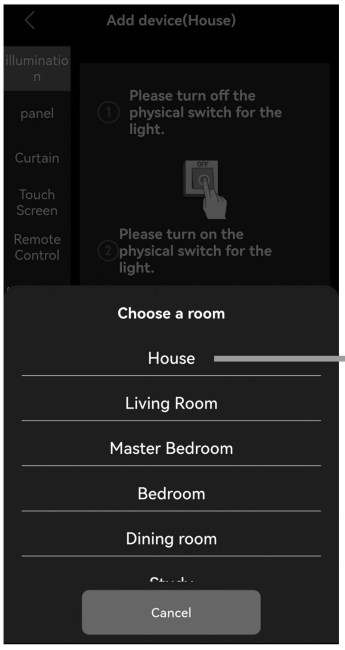

④



⑤ Unplug the smart box

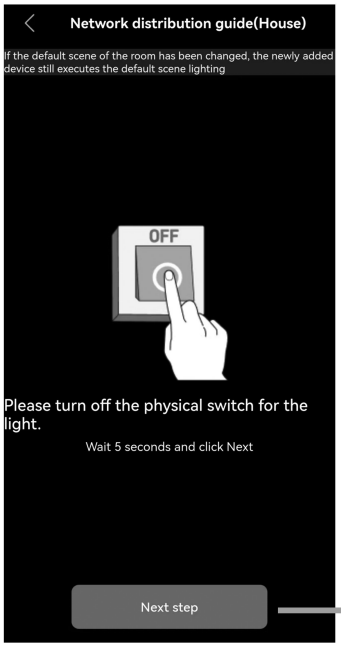

⑥

⑦Plug in the smart box power plug.

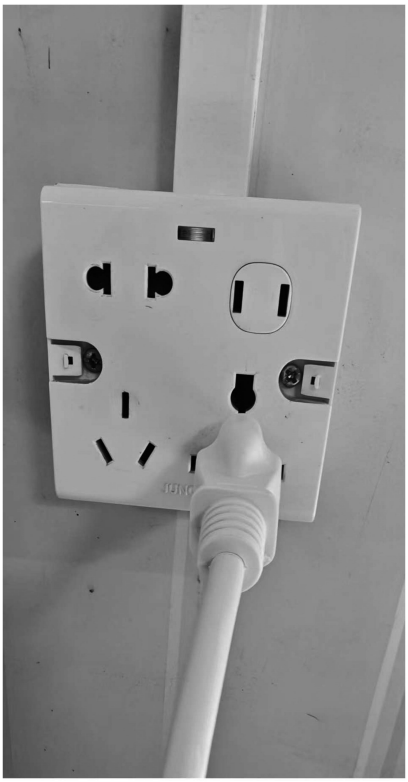

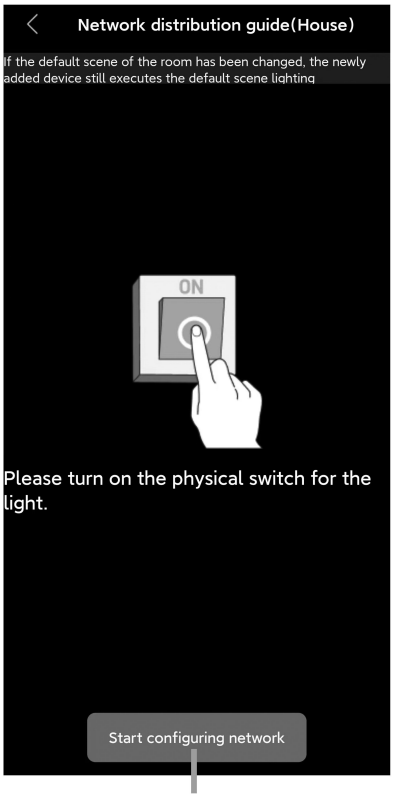

⑧

The appearance of this program icon indicates that the matching is complete

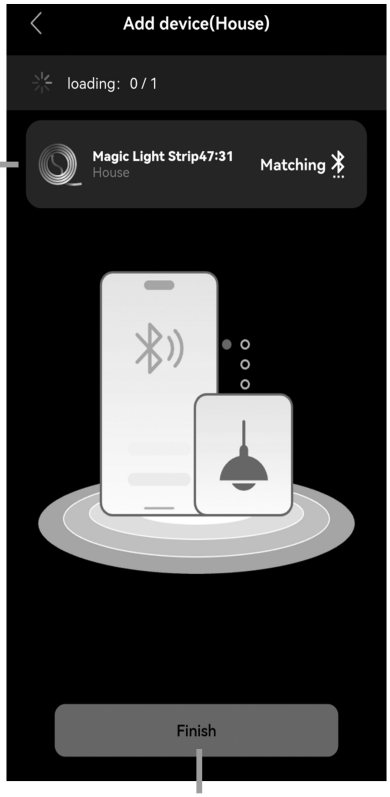

⑨

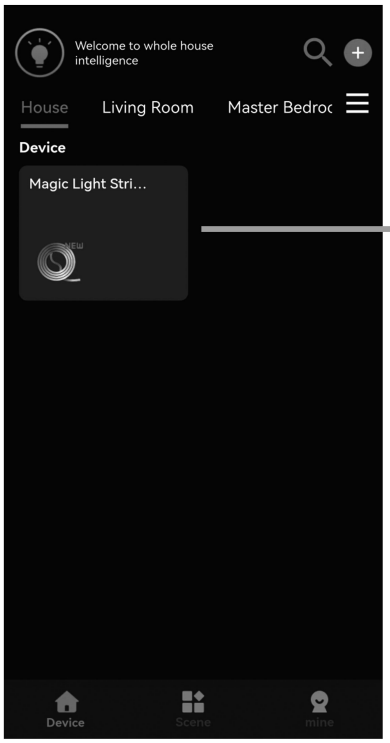

⑩

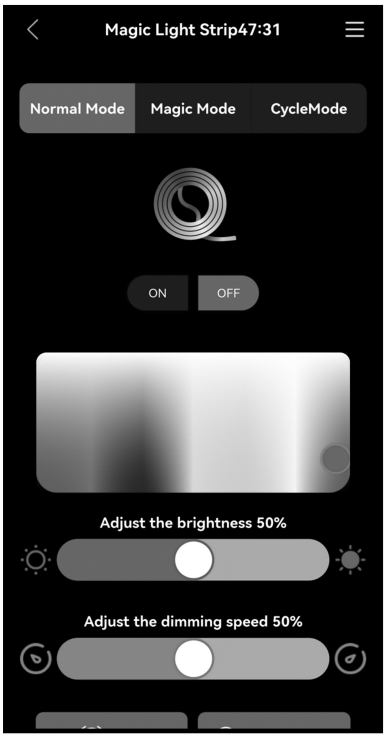

Now you can freely adjust the lighting according to your preferences

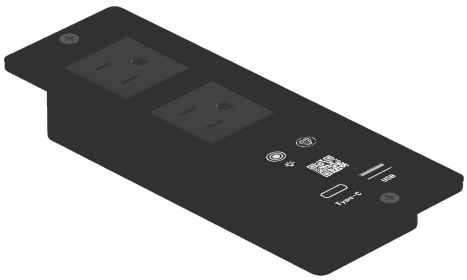

User's Guide

Thank you for purchasing this product.

To use this product, please connect it to a power source.

Please use if the product works normally after connecting to power.

Introduction

The box is an intelligent controller.

It has 1 USB output port 1 Type-c port, and 2 socket outlets.

With 2 touch buttons, it can turn ON/OFF the light,

adjust the light luminance, and change light colors.

The lights can be controlled through both the touch buttons and a dedicated app.

Operation



This touch button is used to turn the light on/off, adjust brightness, and switch the color of the lights.

i. Single Click: Turn the light on/off.

ii. Quick Double-Click: Switch between 7 static RGB colors.

iii. Long Press (2+ seconds): Adjust the light luminance.



This touch button is used to switch dynamic phantom colors .

Single Click:Switch to Phantom Mode, with 5 magical color transformations available.

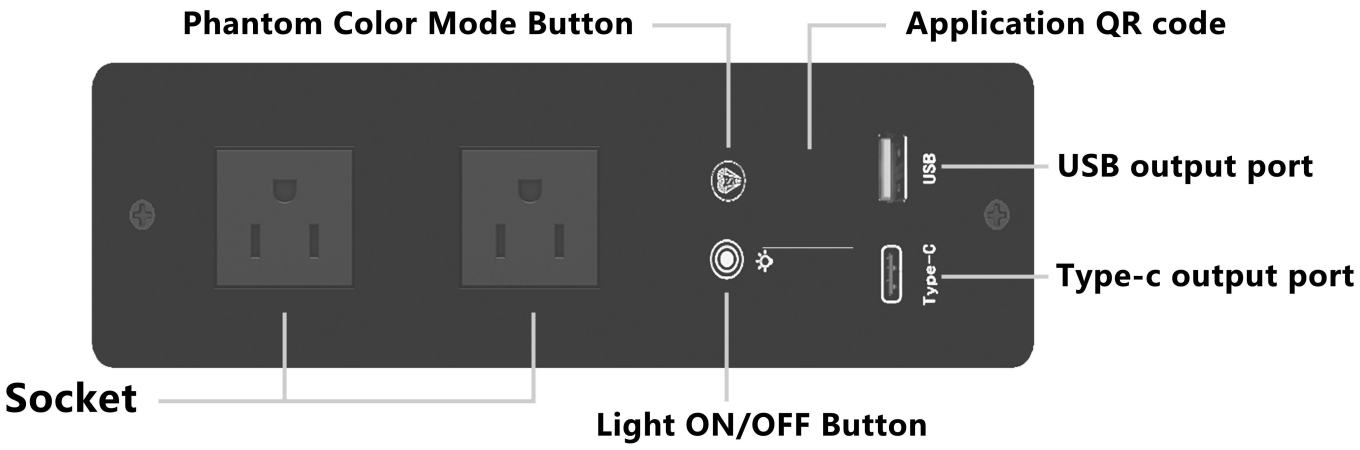

⚠ ATTENTION PLEASE

1. If there is no touch response suddenly, Re-plug the power to reset the touch static electricity.

2. If you have any questions when installing, please feel free to contact us. Thank you.