DINING TABLE
Assembly Instructions

. Tools Included
. Do not throw away packaging materials until assembly is complete
. Assemble this item on a soft, clean surface to protect the product
. Proper assemble requires 2 people
. Make sure all parts are included prior to assembling

PART LIST		
ITEM	DESCRIPTION	QTY
A	Table Top	1PC
B	Table Leg	4PCS

HARDWARE LIST		
ITEM	DESCRIPTION	QTY
1	Wrench	1PC
2	Screw M8*55MM	8PCS
3	Lock Washer	8PCS
4	Washer	8PCS

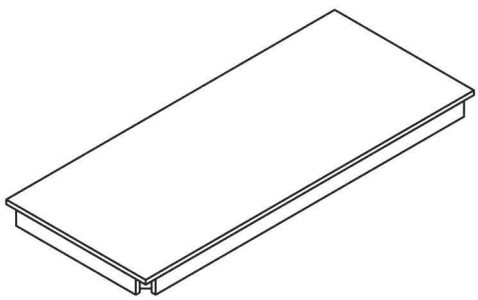

A

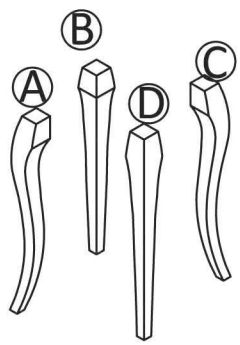

B

STEP 1

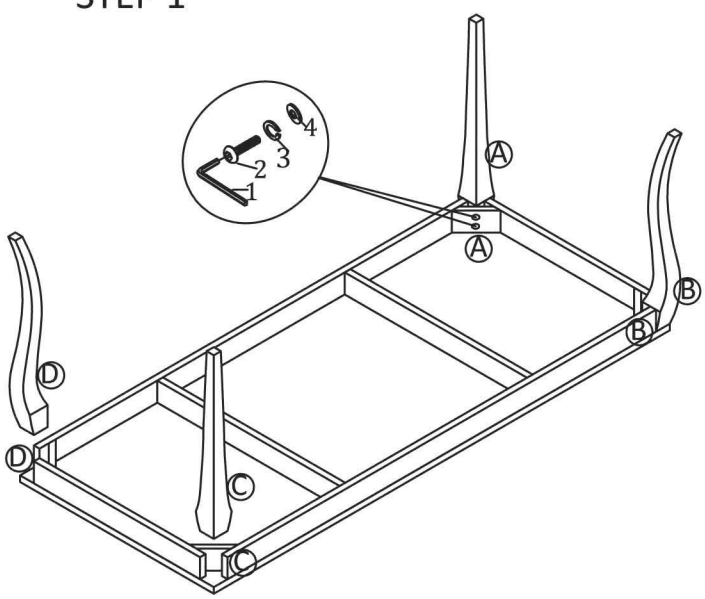

THE END

