ASSEMBLY INSTRUCTION

STEP 1

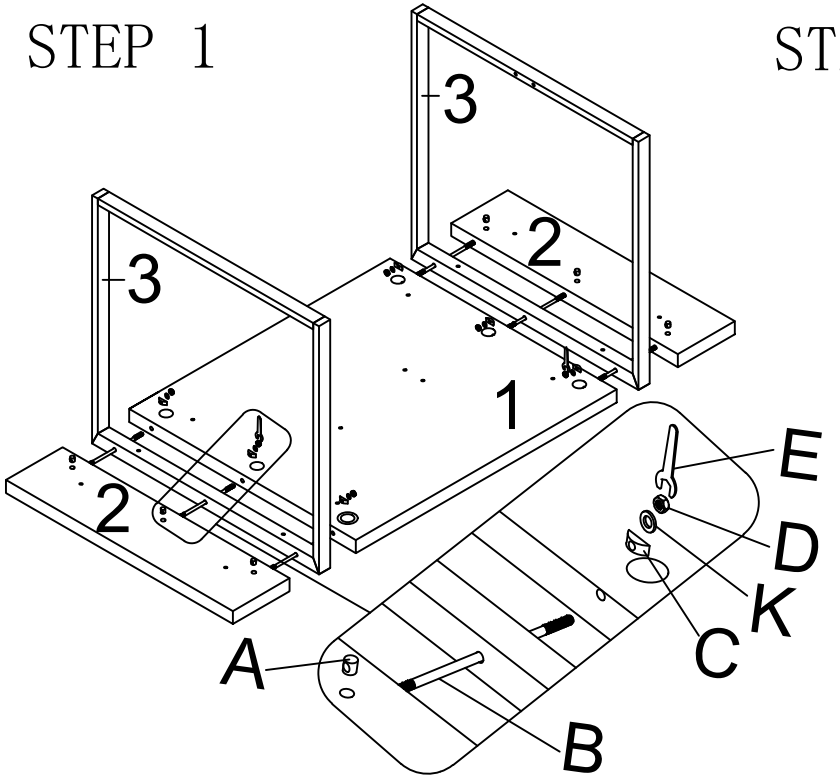

STEP 2

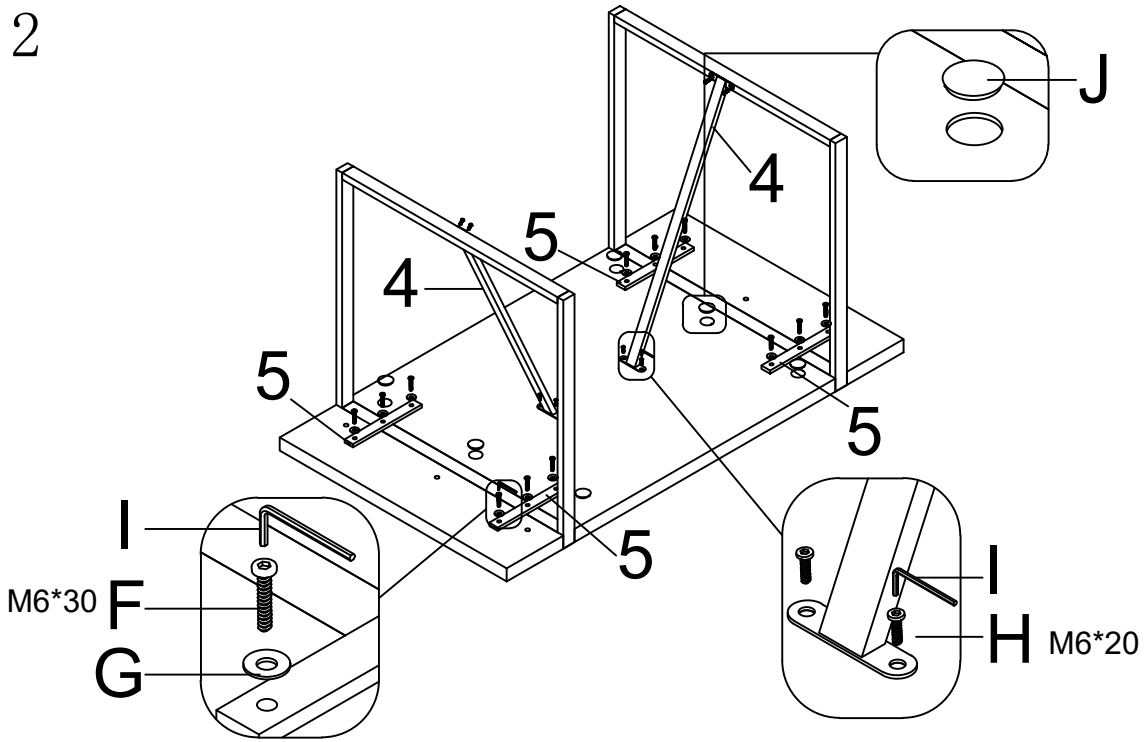

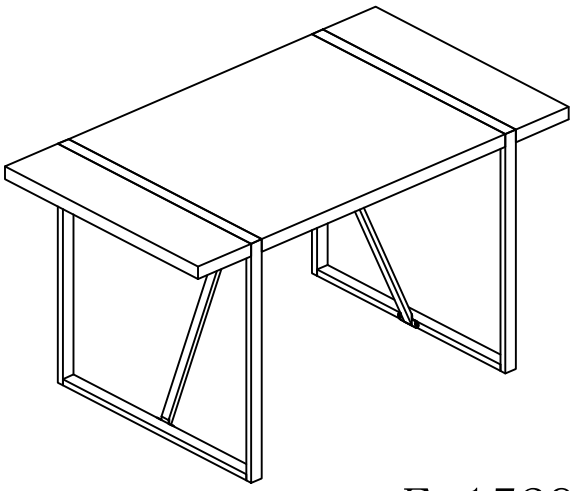

F-1529

1 X1	2 X2	3 X2	4 X2	5 X4
A 6pcs	B 6pcs	C 6pcs	D 6pcs	E 1pc
F M6*30 12pcs	G 12pcs	H M6*20 8pcs	I 1pc	J 6pcs
K 6pcs				