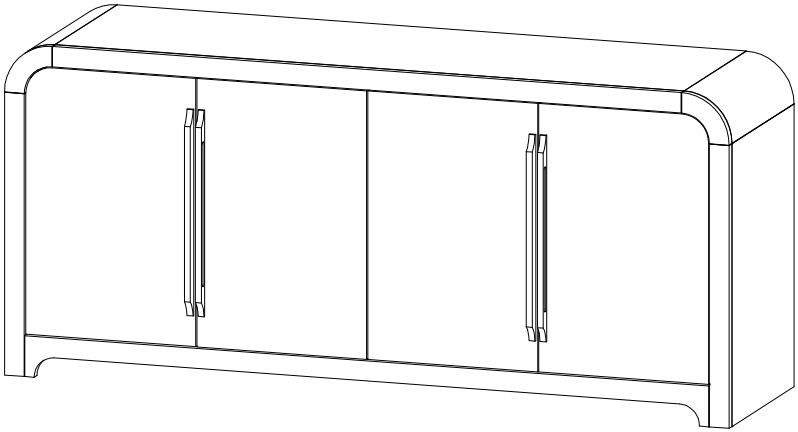

ITEM NO. SBCS1720-OAK

LB

Weight Limitation

100 LBS

15 MINUTES

Installation:
15 minutes.

Two Person

Thank You For Choosing Our Furniture

If you have any questions or concerns,
don't hesitate to reach out to us.

NOTE:
This brochure contains
IMPORTANT safety info.
Please read and keep it
for future reference.

MAINTENANCE AND WARNINGS

Before You Start

Please follow the steps below:

- Check the packaging for any damage, deformation, or water stains. If there is significant damage, please contact us promptly.
- Unpack the box and compare the contents with the parts list and hardware list to ensure all components and accessories are present and complete.
- Please read the installation instructions carefully to understand the installation steps and precautions to ensure proper installation.
- Clean the installation area in advance and ensure the ground is level and there is enough space to avoid damaging the furniture or making installation difficult.
- Lay a protective mat on the ground to prevent scratching the floor during installation.

After-Sales Service

- If you encounter any issues or need technical support during use, please contact our after-sales team.We offer long-term maintenance and warranty services.

Precautions

⚠ This product is for indoor use only. Do not expose it to outdoor elements or high-humidity environments.

⚠ Keep the product away from high heat or open flames to prevent fire hazards.

⚠ Do not allow children to climb on the product, as this may cause tipping and result in personal injury.

Safety Warnings

⚠ If you notice any loose or damaged parts,stop using the product immediately and contact customer service.

⚠ Do not attempt to disassemble or replace any components yourself,as this may affect the stability and safety of the product.

Daily Maintenance

- Regularly clean the surface with a soft cloth to prevent dust accumulation.
- Do not use cleaning agents containing acids,alkalis,or corrosive substances, as they may damage the surface. It is recommended to use neutral cleaning agents or specialized furniture cleaners.
- Avoid exposing furniture to humid environments for extended periods. Use a dehumidifier or desiccant during humid weather.
- Avoid direct contact of furniture with water.If water is accidentally spilled, wipe it dry immediately.
- Avoid placing excessively heavy objects on the furniture: ensure the weight is within a reasonable load-bearing range.
- Avoid using sharp or rough items on the furniture surface to prevent scratches, Handle items gently when moving them.

Explosive view

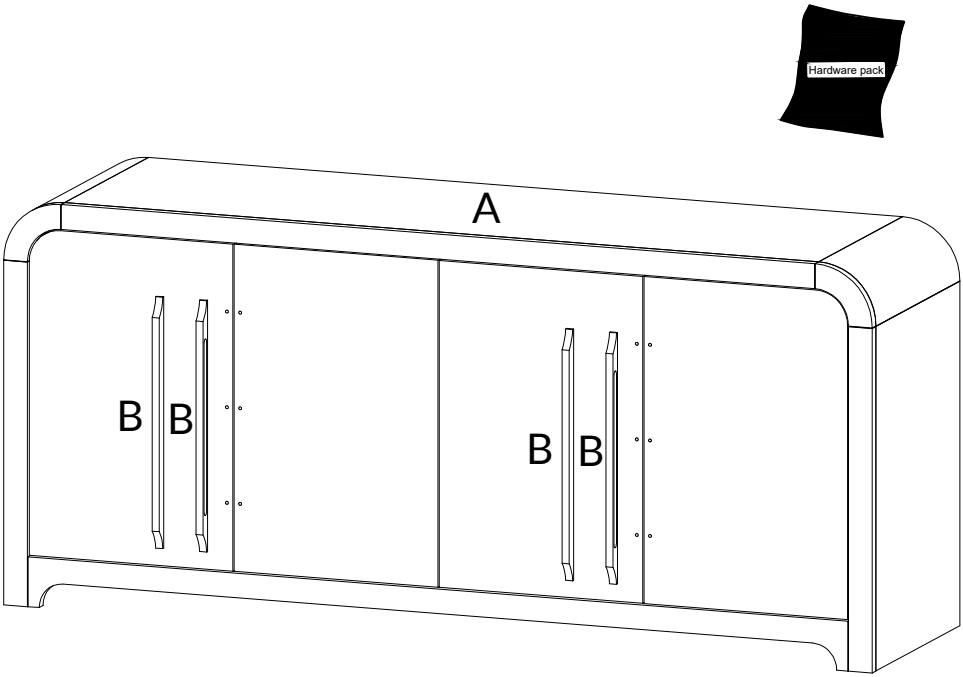

Parts list

Box A

A x1	B x4	C x1 Hardware Pack
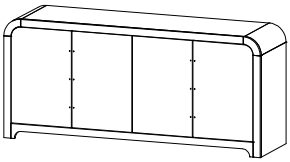	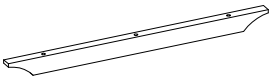	

Hardware List

①x12+2 D5/32x25mm	② x4 	③ x4
④ x2 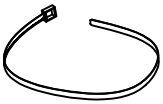	⑤ x4 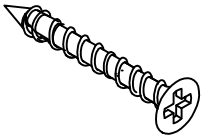 D4x38mm	⑥x4 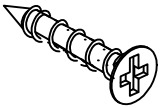 D3x20mm
⑦ x1 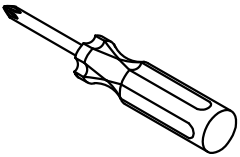 Not including		

Step 1

Install part B into part A, make sure all holes aligned and use screw ① to attach them, tighten screw ① with screwdriver ⑦.

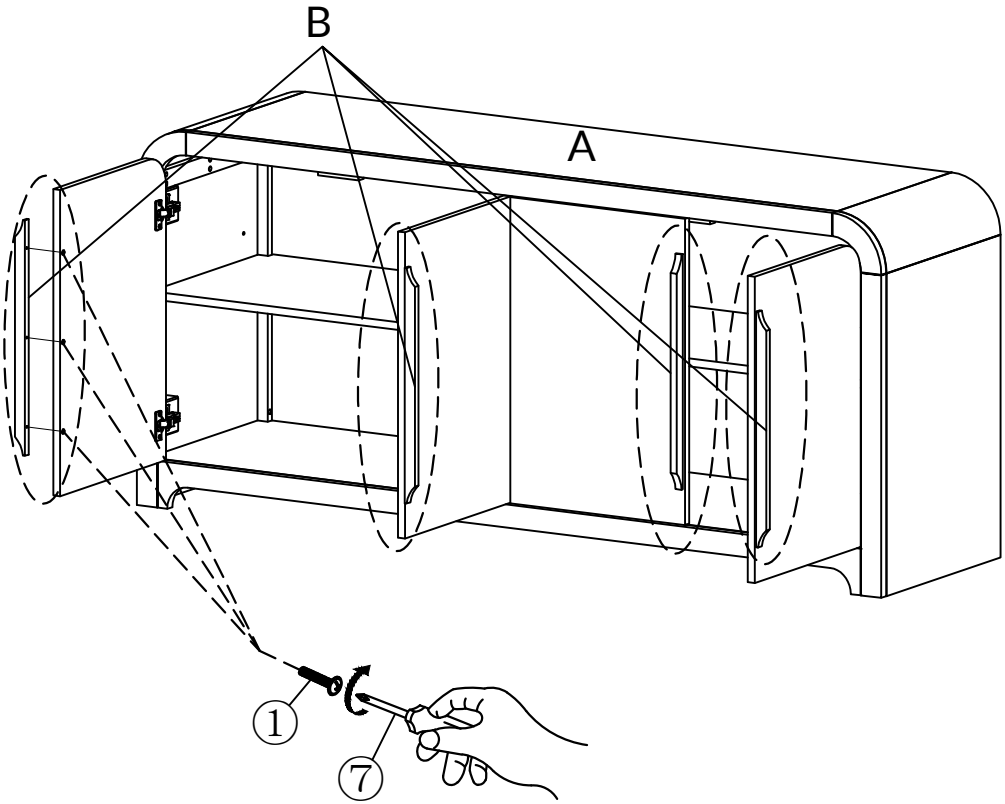

①x12	⑦ x1
D5/32x25mm	Not including

Step 2

Install Anti-tip device ③ and tighten screw ⑥ with screwdriver ⑦.

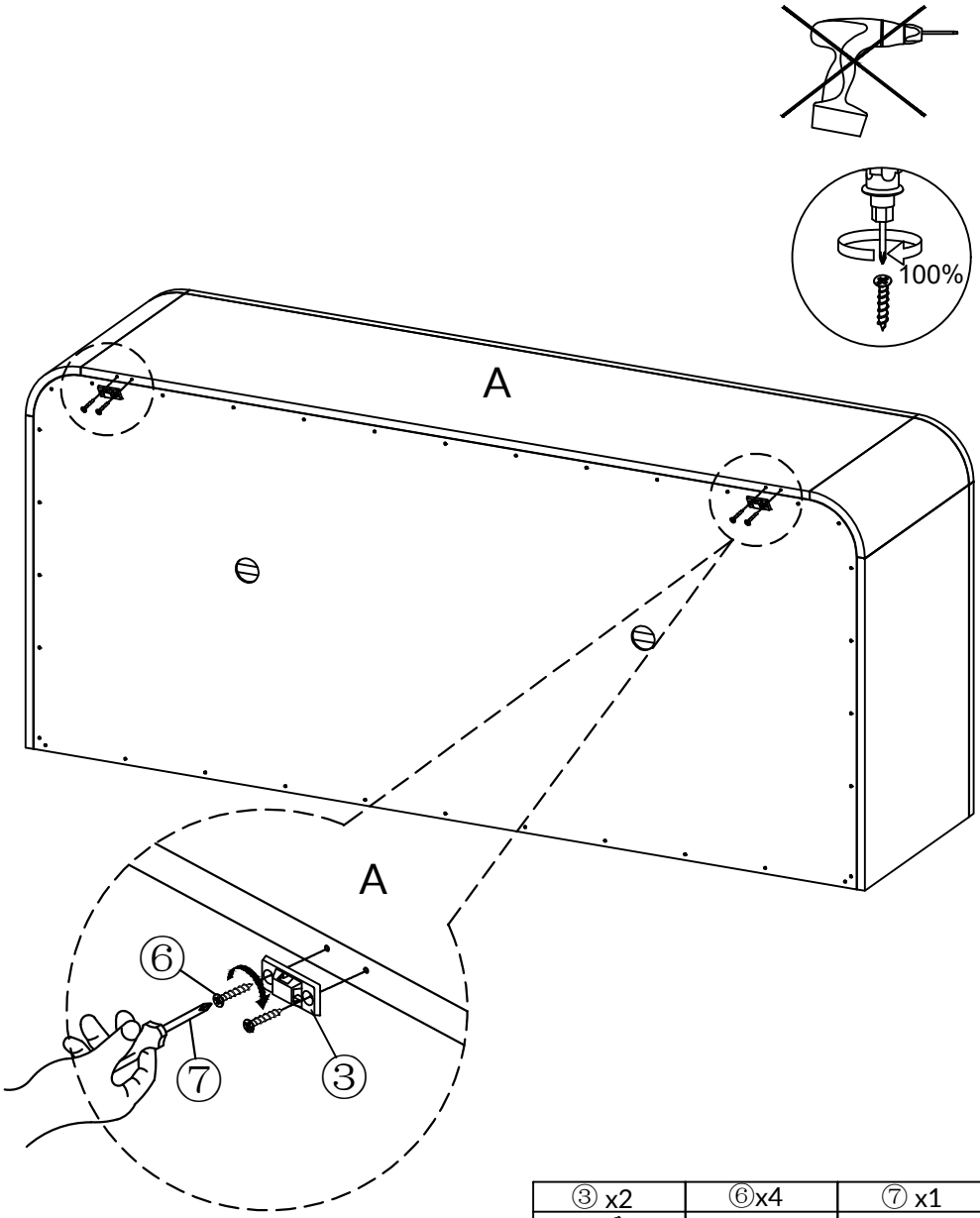

③ x2	⑥x4	⑦ x1
	D3x20mm	Not including

Step 3

Install Anti-tip device ⑤ to the wall in this step.

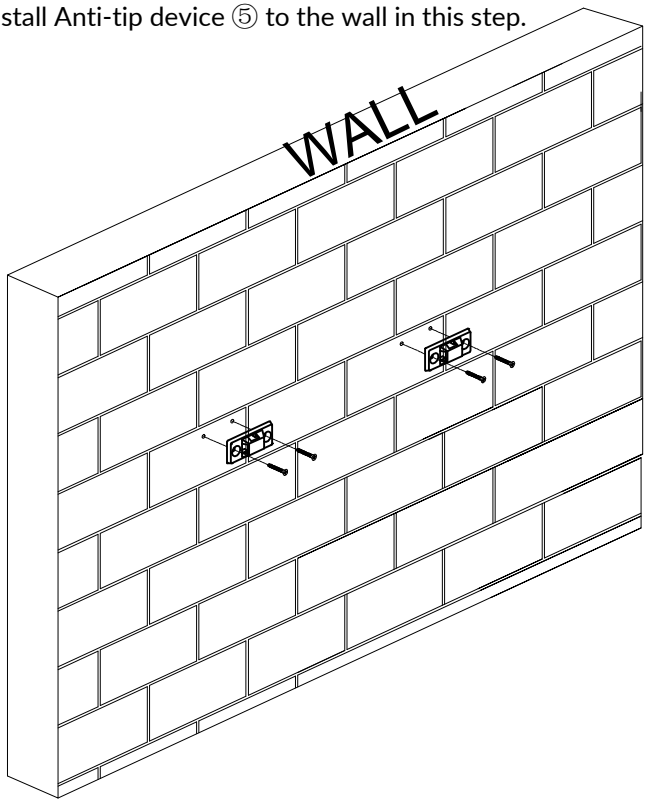

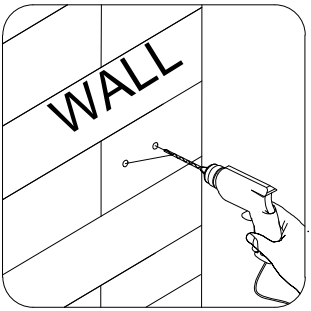

1.Drill a hole in the wall with an electric drill.

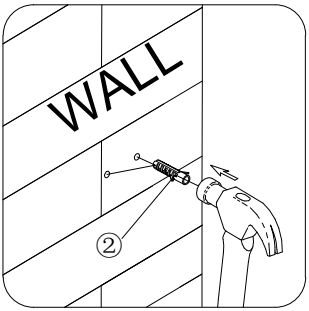

2.Tap the plastic wall anchor into the hole with a hammer.

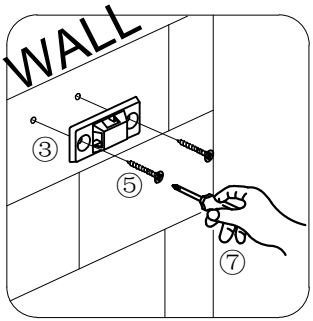

3.Secure the Anti-tip device ③ to the wall with screws ⑤

③ x2	⑤ x4	② x4	⑦ x1
	D4x38mm		Not including

Step 11

WARNING

Children have died from furniture tipover.
To reduce the risk of furniture tipover:
-ALWAYS install Anti-tip device provided.
-For use with televisions weighing 35 lb or less.Use with heavier televisions may result in instability causing tip-over resulting in death or serious injury.
-NEVER allow children to stand, climb or hang on drawers, doors, or shelves.
-NEVER open more than one drawer at a time.
-Place heaviest items in the lowest drawers.

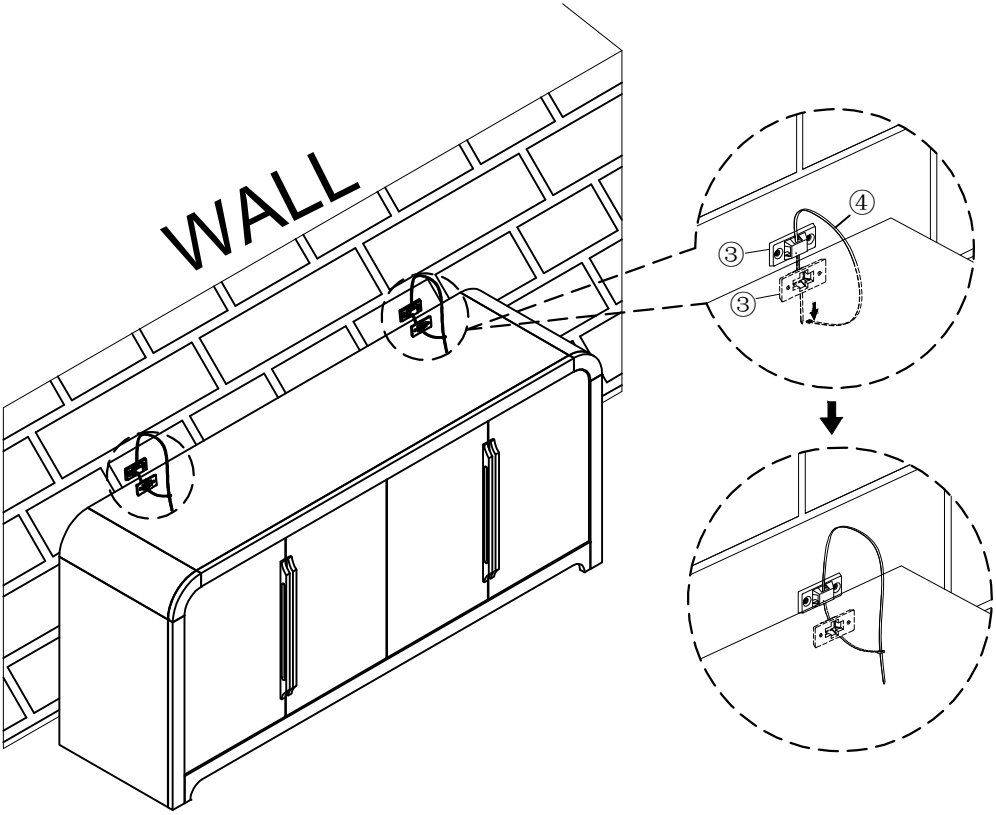

WARRANTY

- We strive to offer quality products, and we also try our best to satisfy every customer who orders from us with products or services as needed.
- Replacement parts can be purchased from our company if available.
- For returns, please check the return policy with the retailer or marketplace where you purchased the item.

Are you having difficulty

With assembly? Missing parts?
Please send an email with your order No. to
hello@hulalahome.com

We appreciate your purchase.
Brighten your life with our furniture!