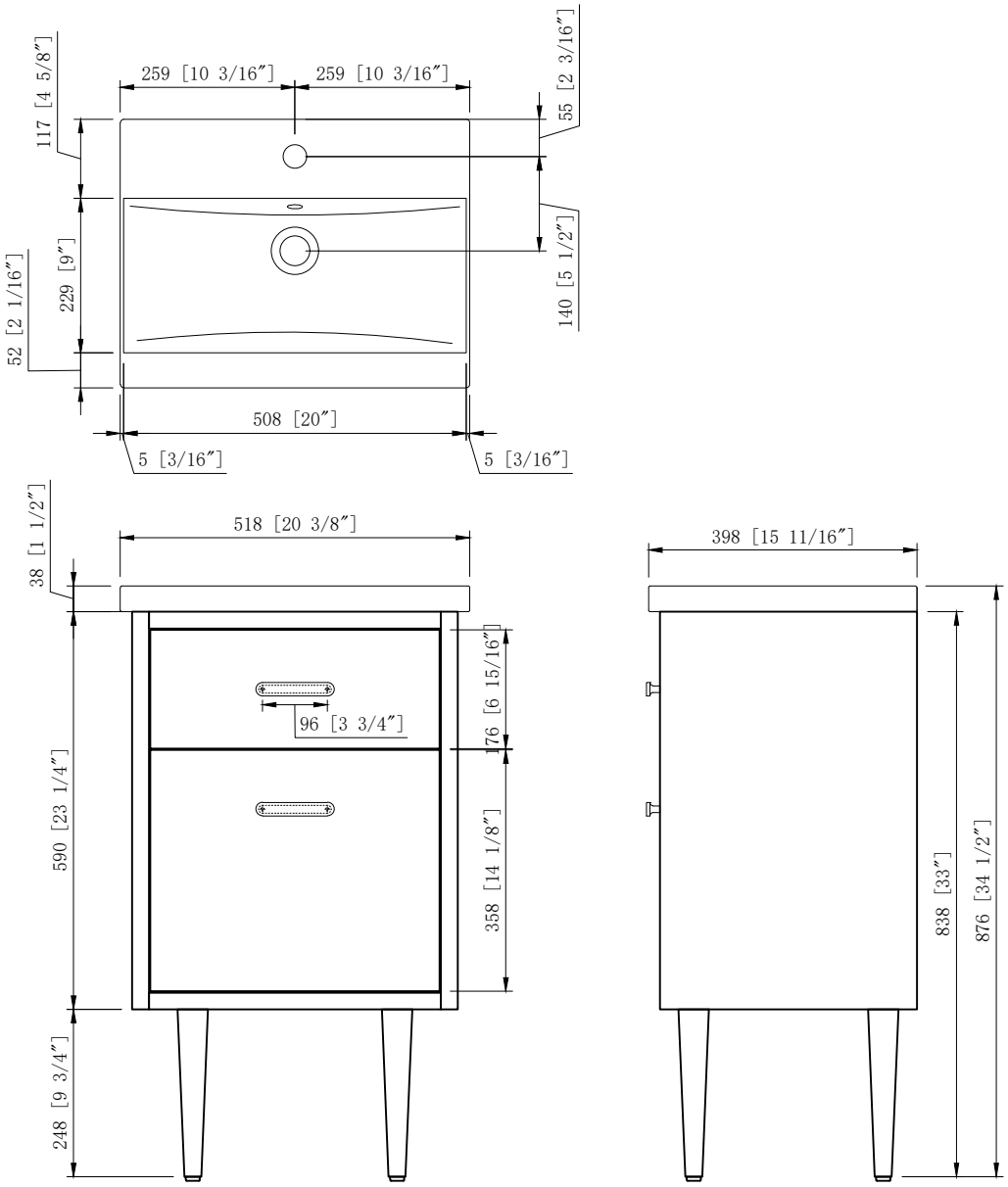
259 [10 3/16″]
259 [10 3/16″]
117 [4 5/8″]
55 [2 3/16″]
229 [9″]
52 [2 1/16″]
140 [5 1/2″]
508 [20″]
5 [3/16″]
5 [3/16″]
518 [20 3/8″]
38 [1 1/2″]
96 [3 3/4″]
176 [6 15/16″]
590 [23 1/4″]
358 [14 1/8″]
248 [9 3/4″]
398 [15 11/16″]
838 [33″]
876 [34 1/2″]

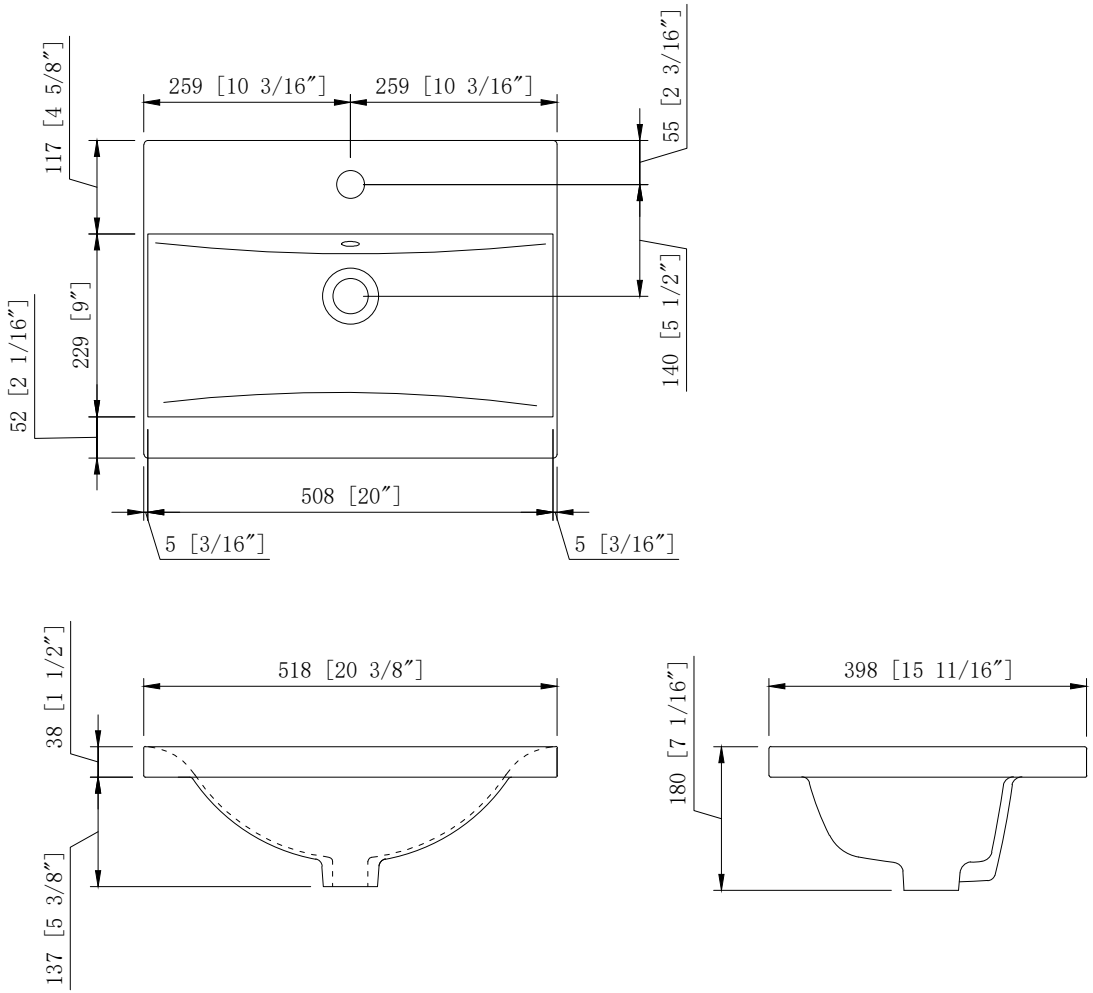
259 [10 3/16″]
259 [10 3/16″]
117 [4 5/8″]
55 [2 3/16″]
229 [9″]
52 [2 1/16″]
140 [5 1/2″]
508 [20″]
5 [3/16″]
5 [3/16″]
518 [20 3/8″]
38 [1 1/2″]
137 [5 3/8″]
398 [15 11/16″]
180 [7 1/16″]

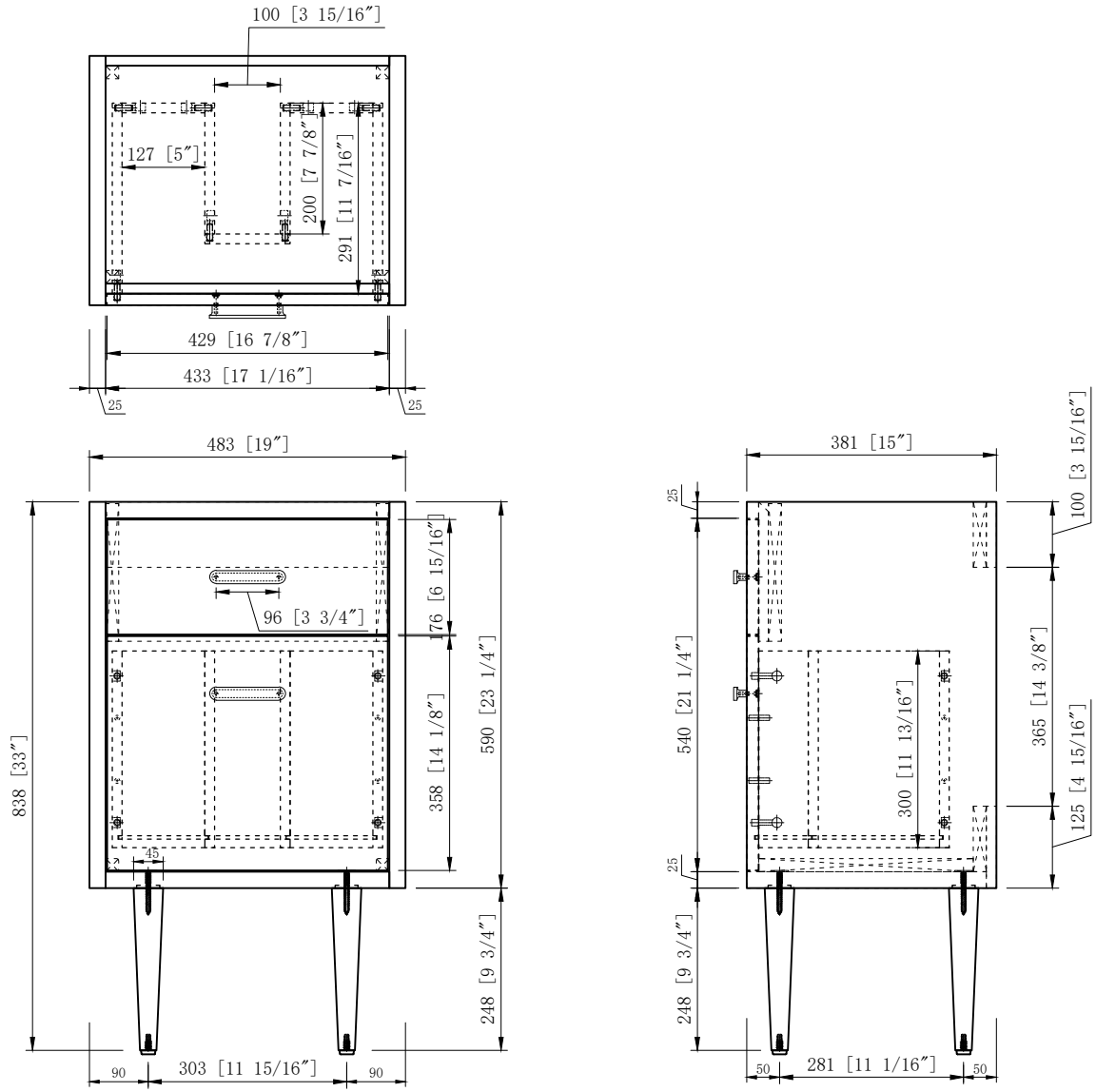
100 [3 15/16″]
127 [5″]
200 [7 7/8″]
291 [11 7/16″]
429 [16 7/8″]
433 [17 1/16″]
25
25
483 [19″]
838 [33″]
96 [3 3/4″]
176 [6 15/16″]
358 [14 1/8″]
590 [23 1/4″]
45
248 [9 3/4″]
90
303 [11 15/16″]
90
381 [15″]
25
540 [21 1/4″]
300 [11 13/16″]
100 [3 15/16″]
365 [14 3/8″]
125 [4 15/16″]
25
248 [9 3/4″]
50
281 [11 1/16″]
50

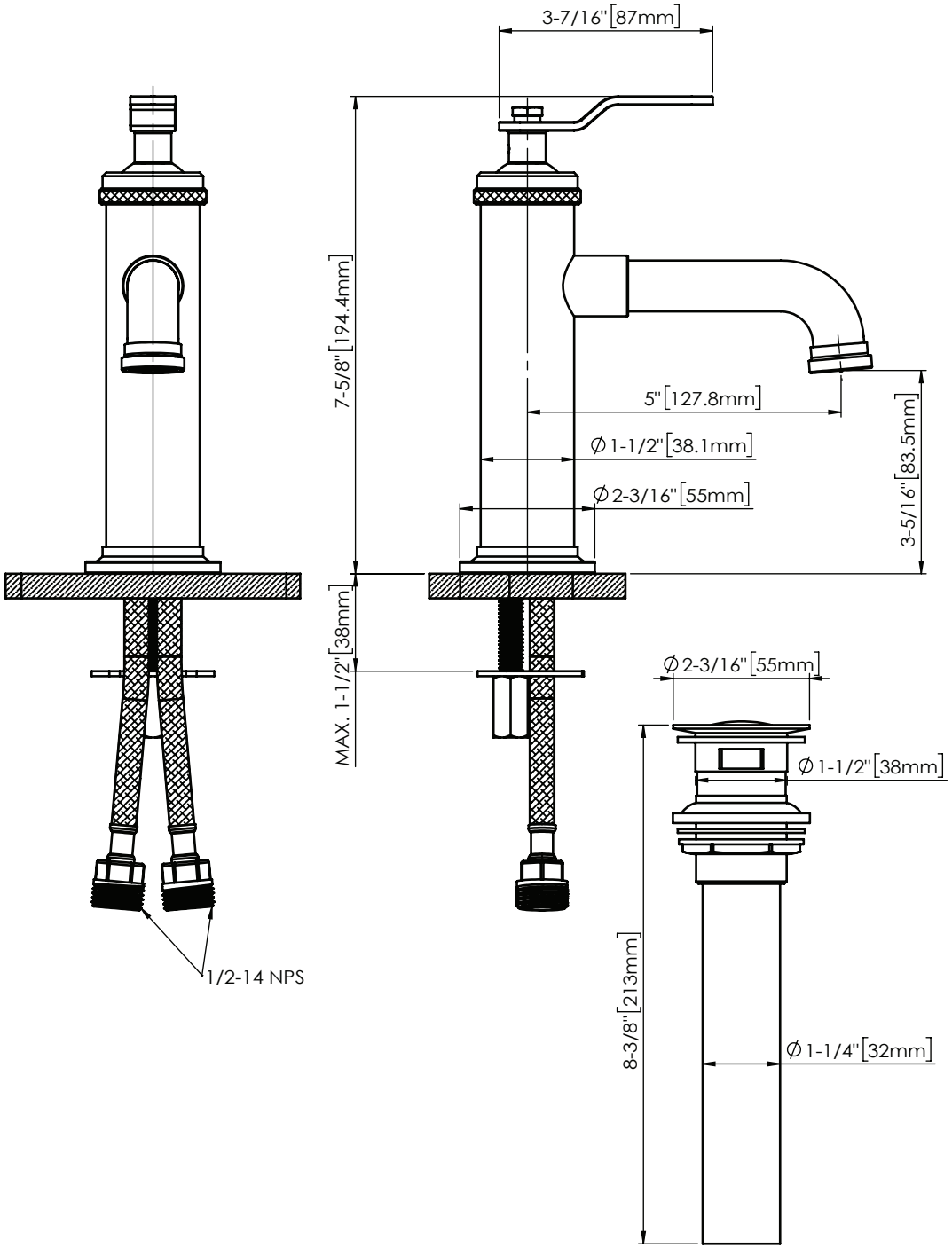
3-7/16"[87mm]
7-5/8"[194.4mm]
5"[127.8mm]
Ø1-1/2"[38.1mm]
Ø2-3/16"[55mm]
3-5/16"[83.5mm]
MAX. 1-1/2"[38mm]
Ø2-3/16"[55mm]
Ø1-1/2"[38mm]
8-3/8"[213mm]
Ø1-1/4"[32mm]
1/2-14 NPS