CAPPUCCINO COMPUTER DESK

ASSEMBLY INSTRUCTION

ASSEMBLY INSTRUCTION

ASSEMBLY TIPS：

1.Remove hardware from box and sort by size.
2.Please check to see that all hardware and parts are present prior to start of assembly.
3.Please follow attached instructions in the same sequence as numbered to assure fast & easy assembly.

Warning！

1.Don't attempt to repair or modify parts that are broken or defective.Please contact the store immediately.
2.This product is for home use only and not intended for commercial establishment.

PARTS IDENTIFICATION：

(A) TOP PANEL 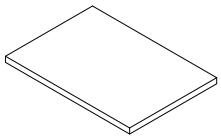 1PC

(B) LEFT SIDE PANEL 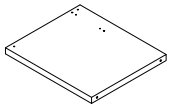 1PC

(C) RIGHT SIDE PANEL 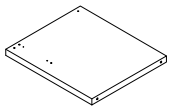 1PC

(D) BACK PANEL 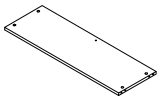 1PC

Z	HARDWARE PACKAGE						
NO	DESCRIPTION	FIGURE	Q'TY	NO	DESCRIPTION	FIGURE	Q'TY
1	GLUE 15g	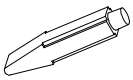	1PC	7	BOLT § 6.2x45mm		4PCS
2	CAM BOLT § 7x35.5mm	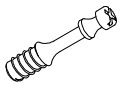	4PCS	8	BOLT § 6.2x18mm		1PC
3	CAM LOCK § 15x12mm		4PCS	9	SCREW § 4.2x25.4mm		10PCS
4	ADJUSTMENT FEET § 35x17.2mm		4PCS	10	WOODEN DOWEL § 8x30mm	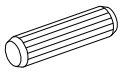	4PCS
5	COUPLER		5PCS	11	STICKER § 20	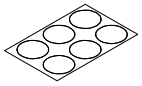	1PC
6	BOLT § 4.5x12mm		5PCS				

STEP 1

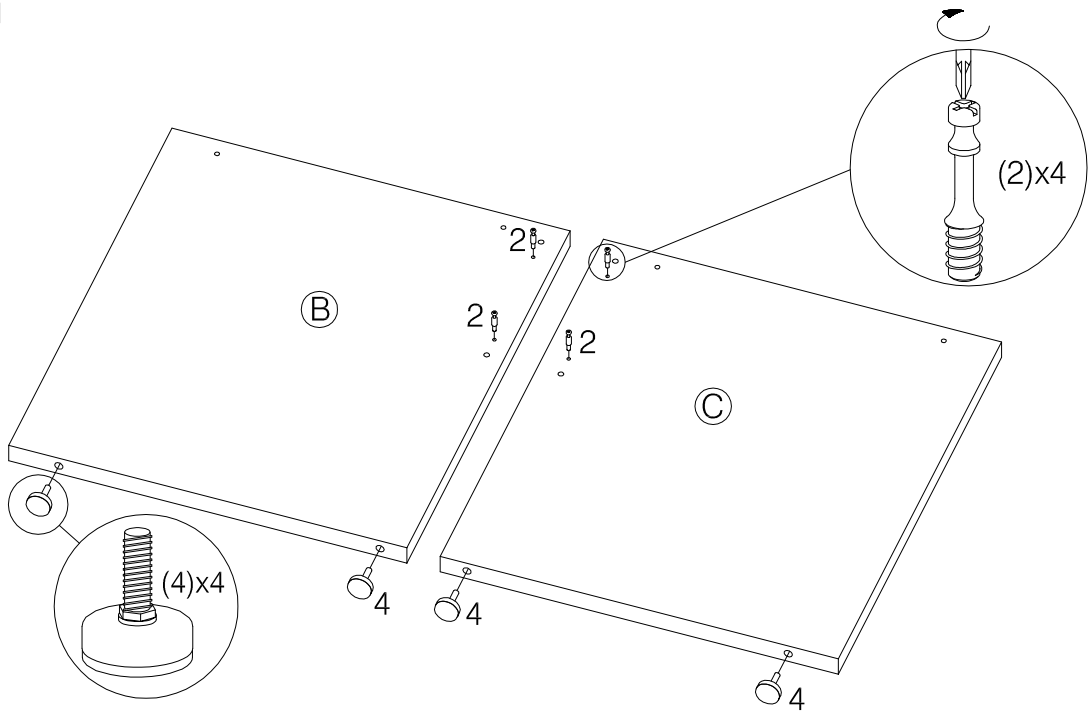

STEP 2

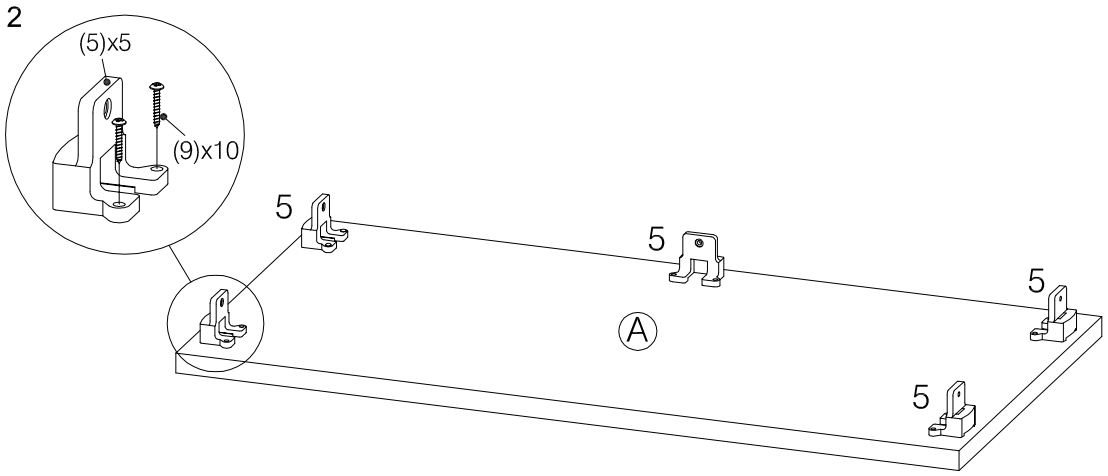

STEP 3

The Glue (1) should be used in the indicated locations to help solidify the assembled unit.

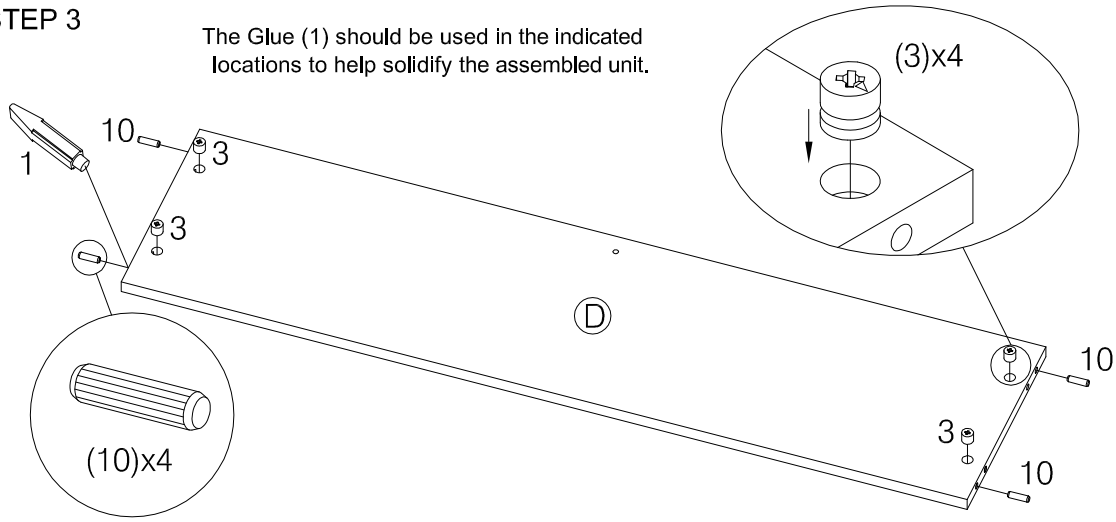

STEP 4

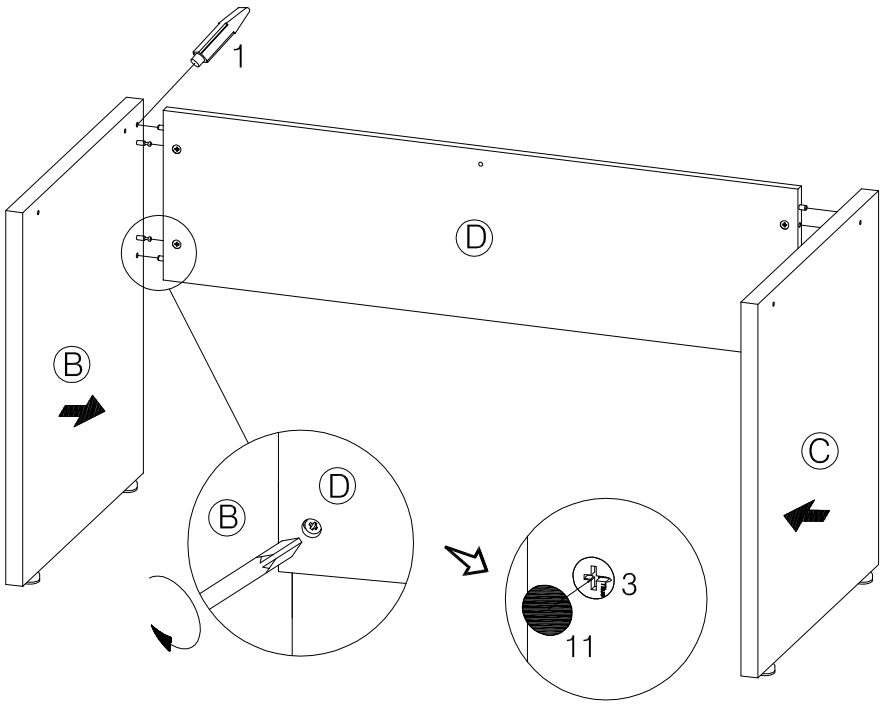

STEP 5

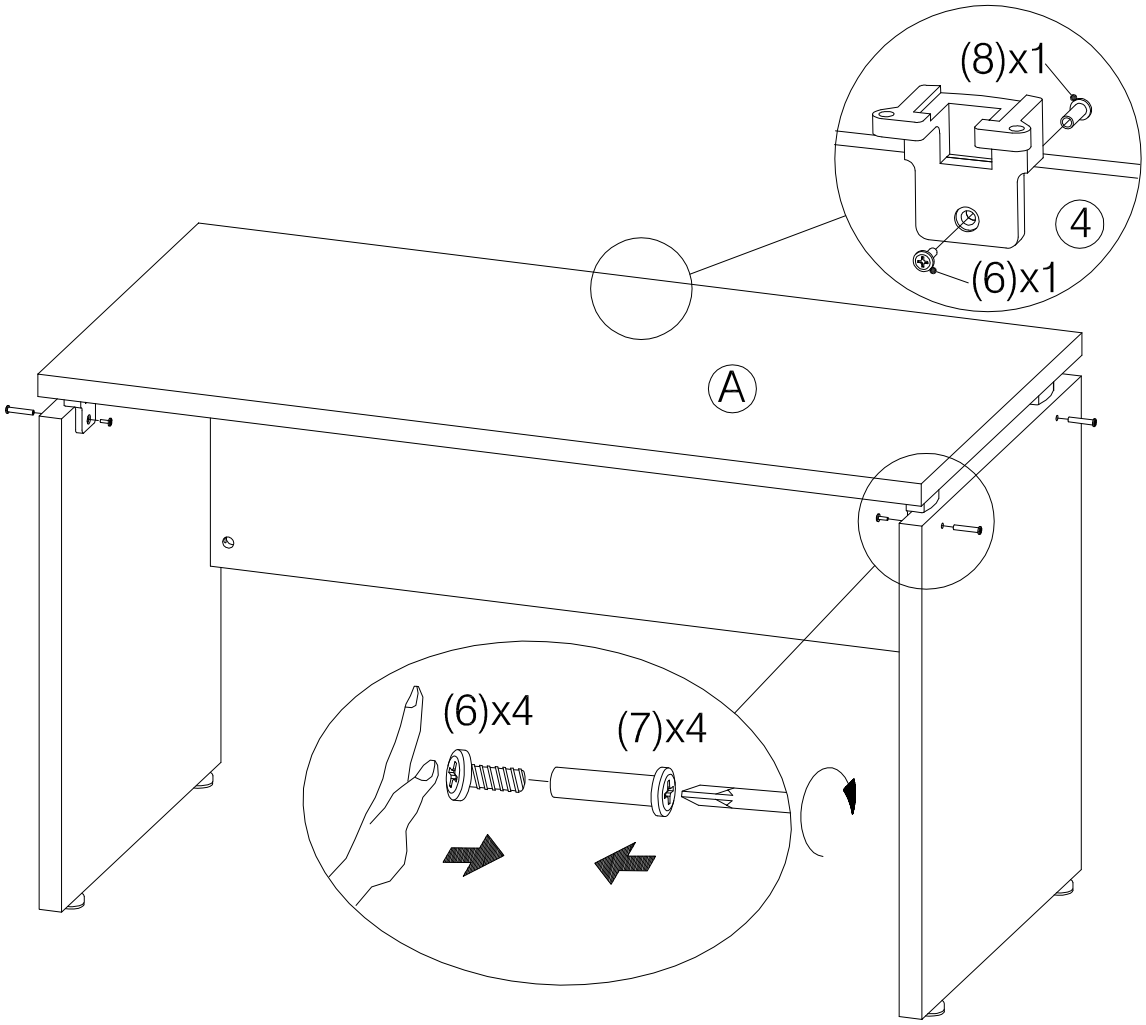

Assembly Instruction as below:

Step 1: Insert and screw (2) into the holes on the (B)/(C)，then turn (4) attached on the bottom of (B)/(C).

Step 2: Connect (5) with (A) by (9).

Step 3: Insert (10) into the holes at two sides of (D)，Insert (3) into the holes on the (D).

Step 4: Place (D) between (B)/(C)，when(2) is connected inside (3)，tightly fasten (3) clockwise and cover all holes with wood colored stickers (11) .

Step 5: Connect (A) with (B)/(C) by (6)&(7)，Connect (A) with (D) by (6)&(8).