ASSEMBLY INSTRUCTION
AVELLINO BED - QUEEN

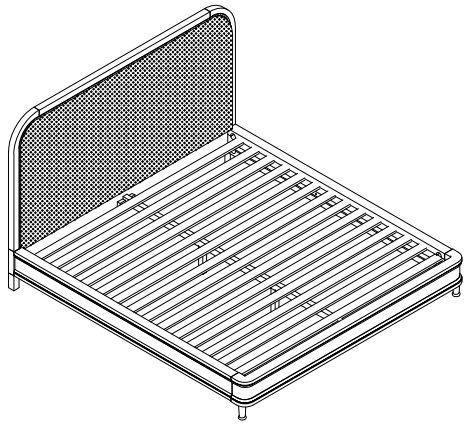

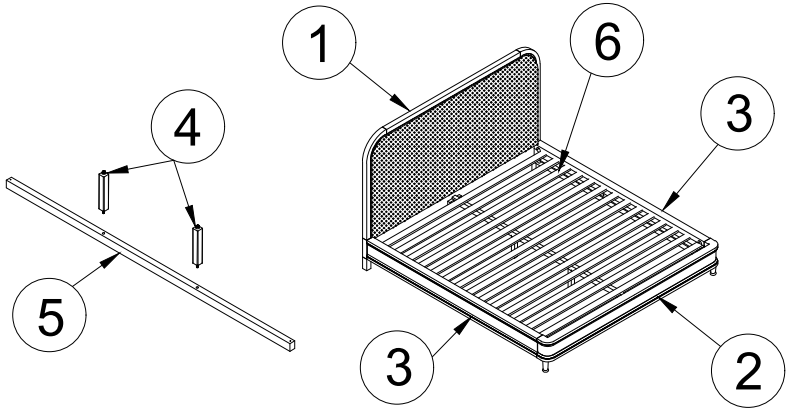

		Name of Hardware	Qty
A		Stud Bolts M8 x 80	8
B		Nuts M8	8
C		Lock Washer M8	8
D		Curved Washers	8
E		Long Screw M4x60	2
F		Short Screw M4x30	8
G		Wrench K13	1

Step: 1

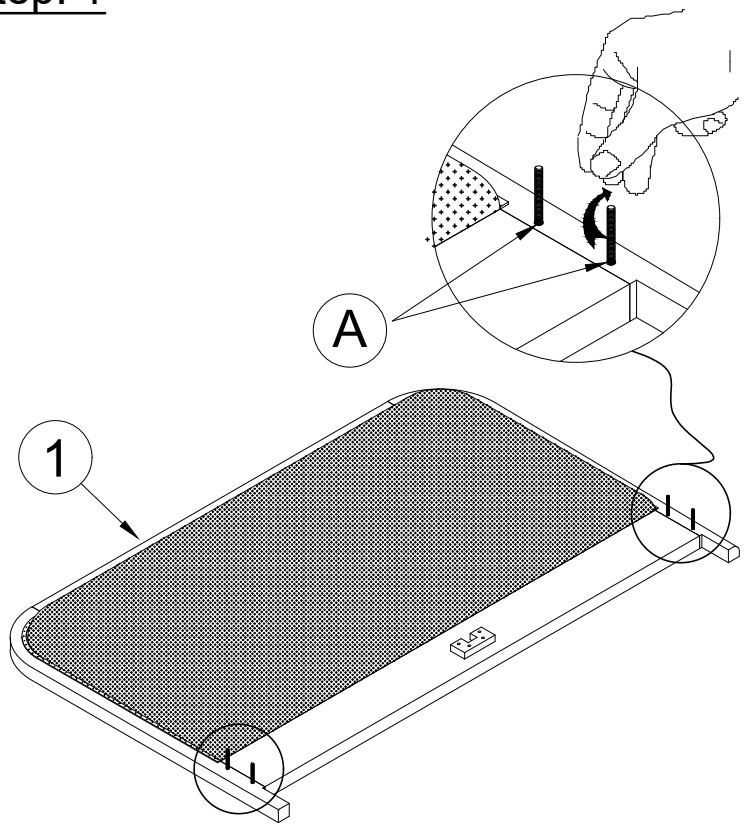

Step: 2

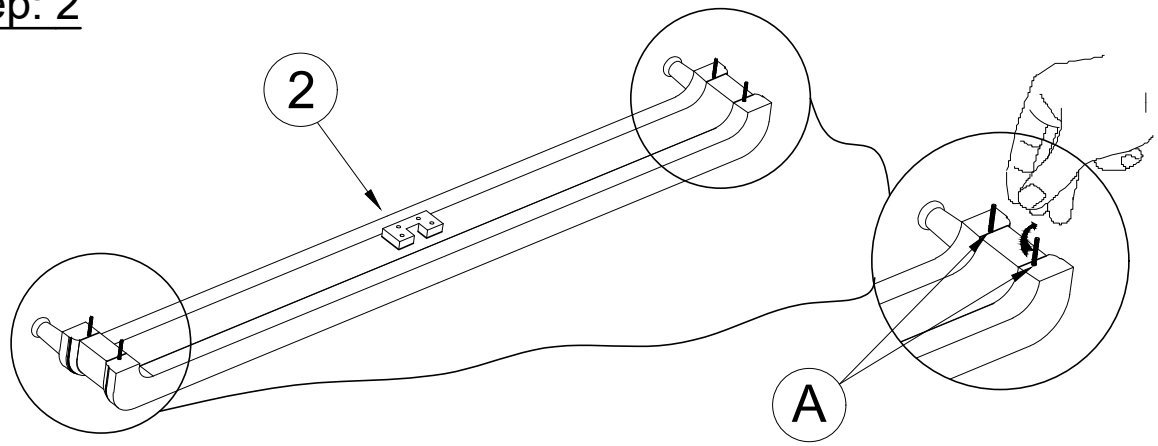

Step: 3

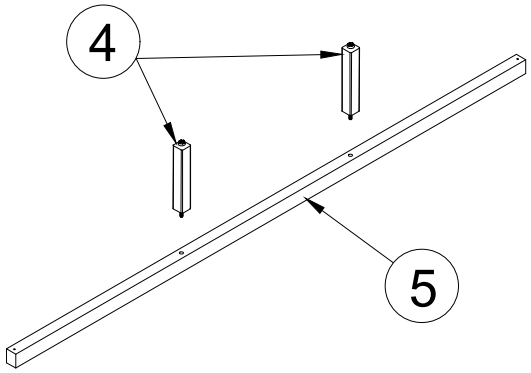

ASSEMBLY INSTRUCTION
AVELLINO BED - QUEEN

Step: 4

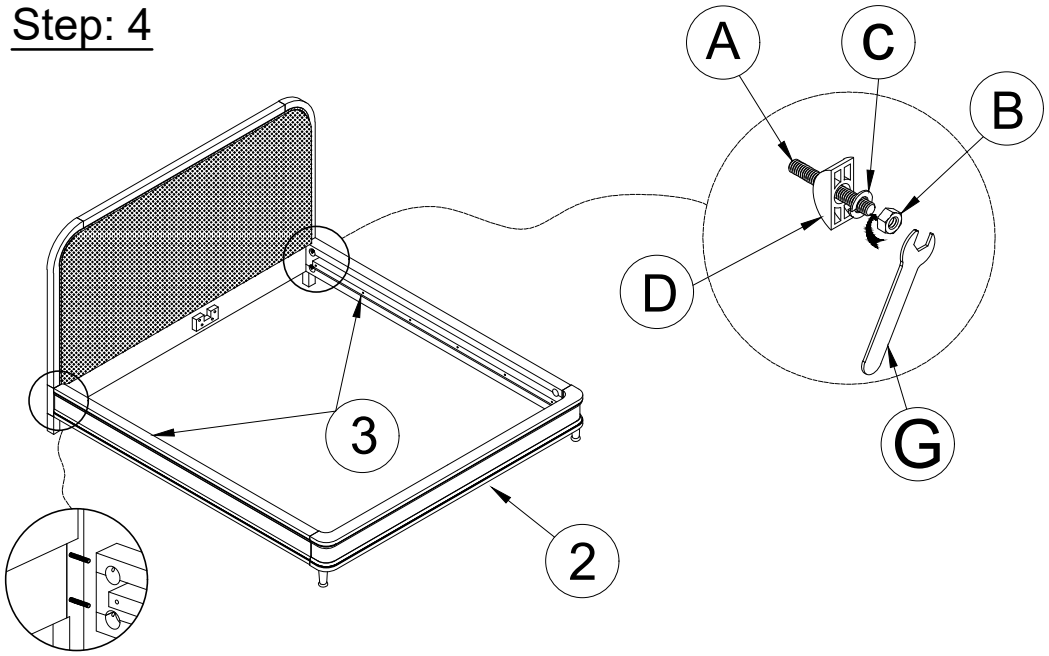

Step: 5

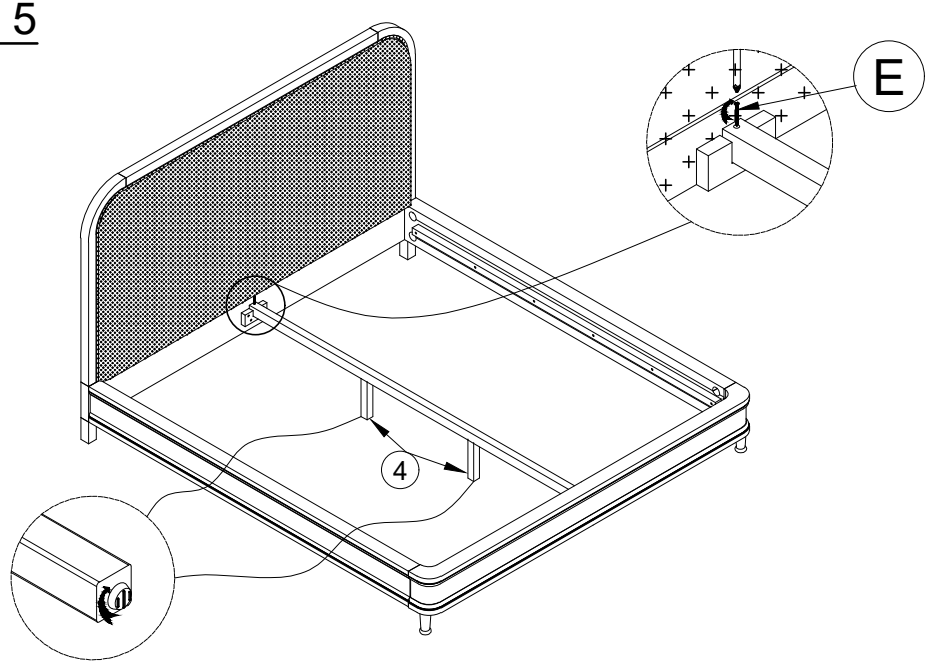

Adjusting Floor Levelers

Your furniture has been expertly crafted and pre-adjusted by professionals. However, slight shifts can occur during transportation. If you notice that the doors are not perfectly aligned or the furniture wobbles, a quick adjustment can help ensure stability and a seamless look.

Adjust the Floor Levelers

Check for Stability - Place the furniture in its final position on a level surface. If it wobbles or doesn't sit evenly, the floor levelers need adjusting.

Locate the Levelers - These are small adjustable feet found at the bottom corners of your furniture.

Adjust as Needed - Using your hand or a wrench, turn the levelers clockwise to raise or counterclockwise to lower the furniture. Make small adjustments and check stability after each turn.

ASSEMBLY INSTRUCTION
AVELLINO BED - QUEEN

Step: 6

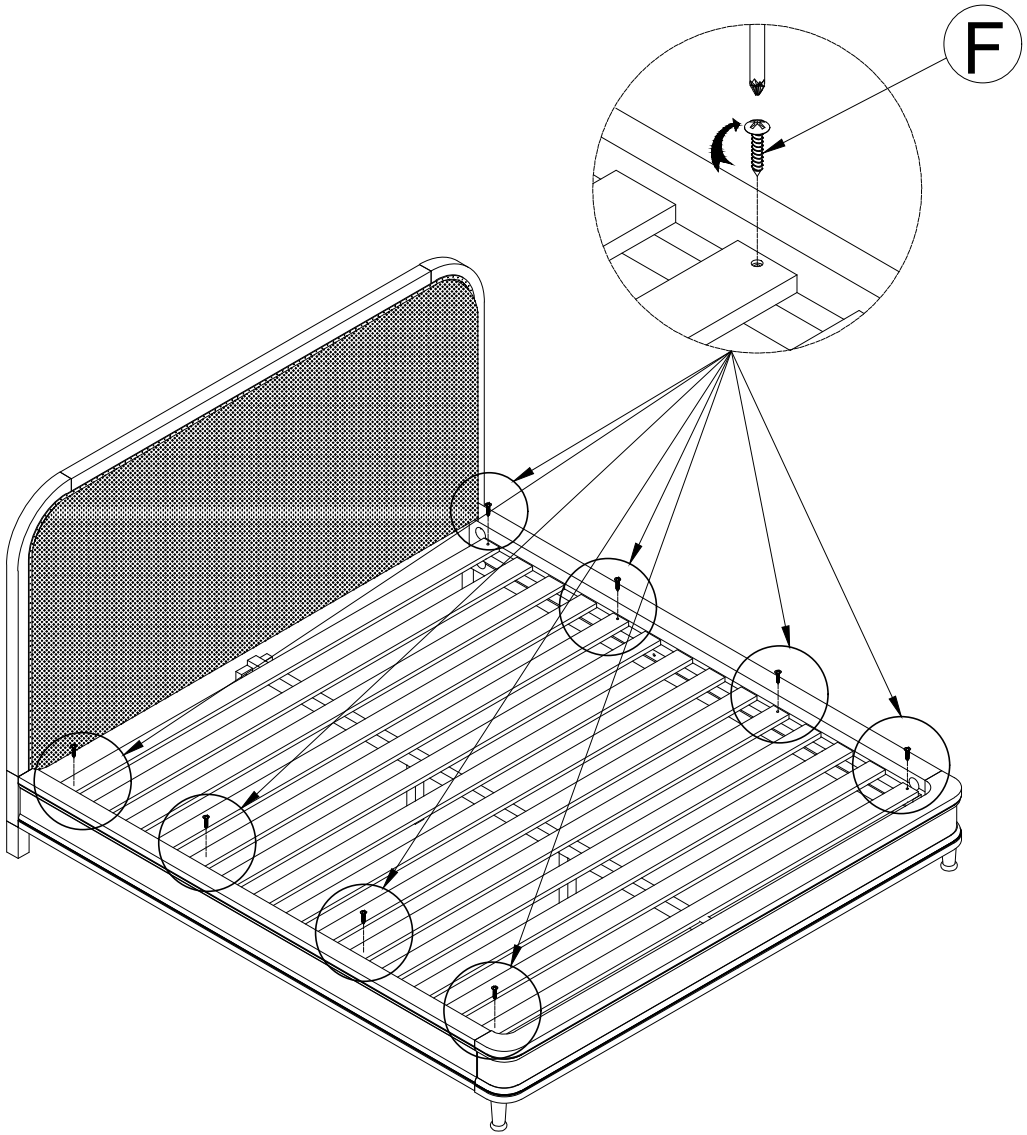

Step: 7

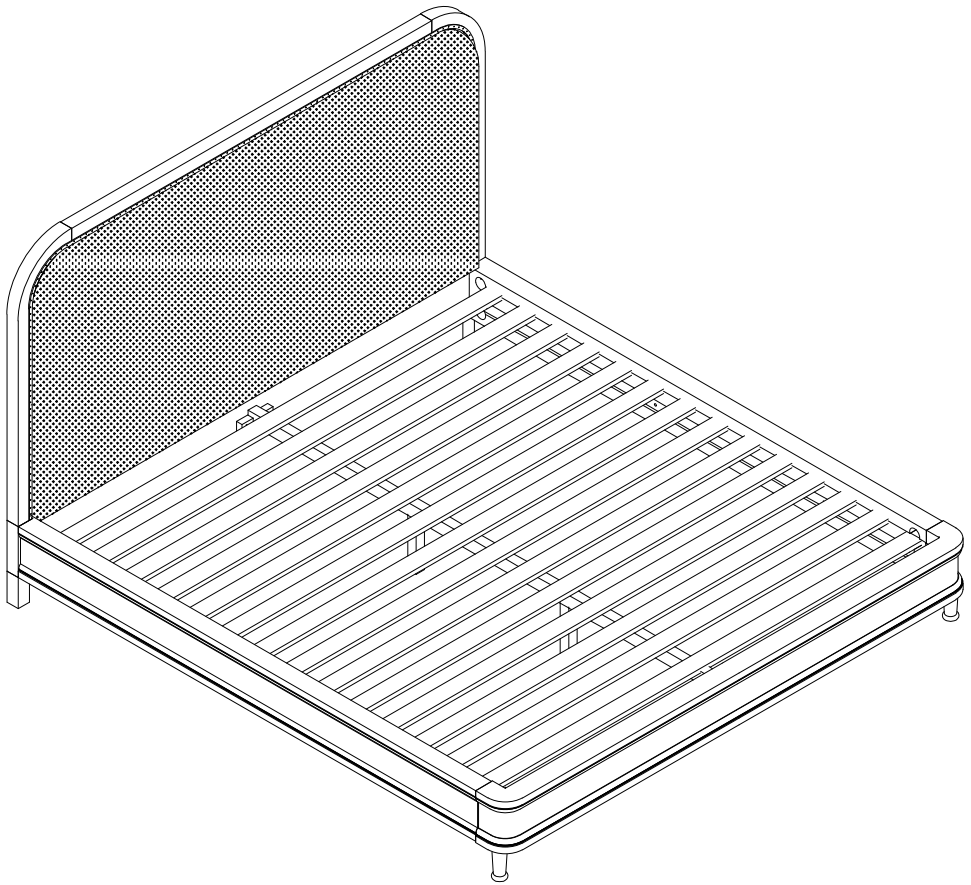

MADE IN VIETNAM

FINISH