KB5890,1,2,3,7,8DX

Single Handle Pressure Balanced Tub & Shower Faucet

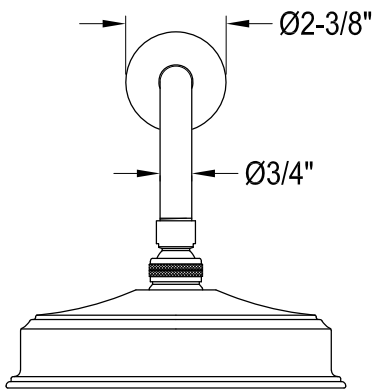

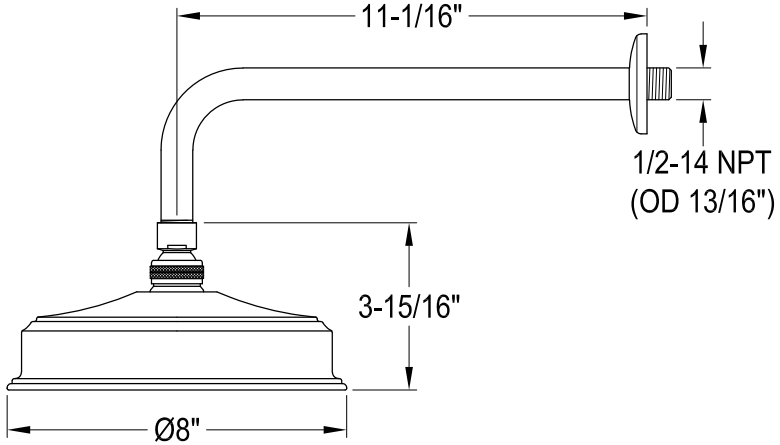

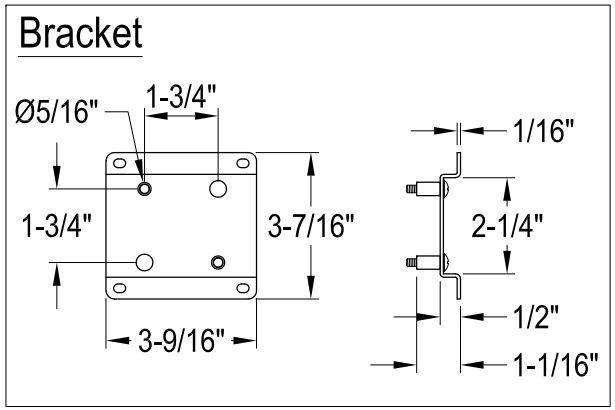

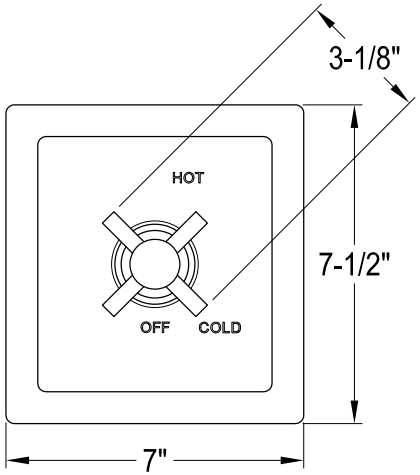

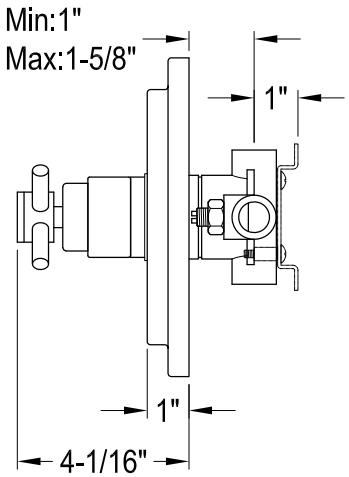

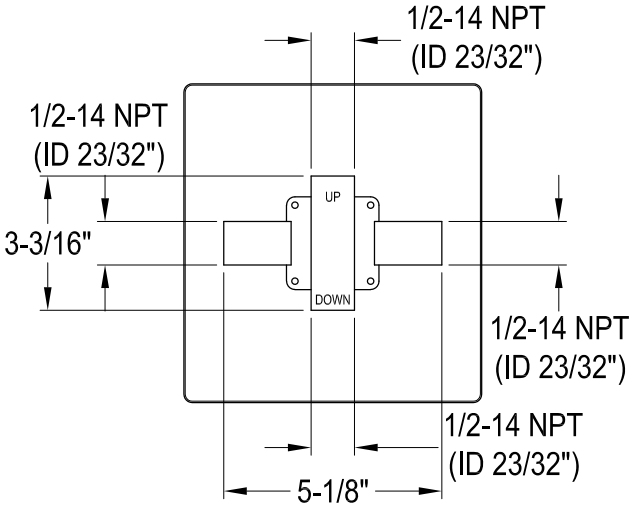

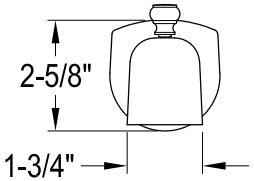

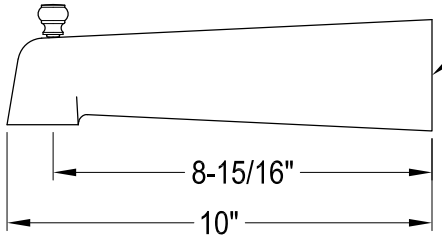

Fit 1/2" Copper Pipe (OD 5/8")
or 1/2-14 NPT (ID 23/32")
or 3/4-14 NPT (ID 15/16")