Streamline

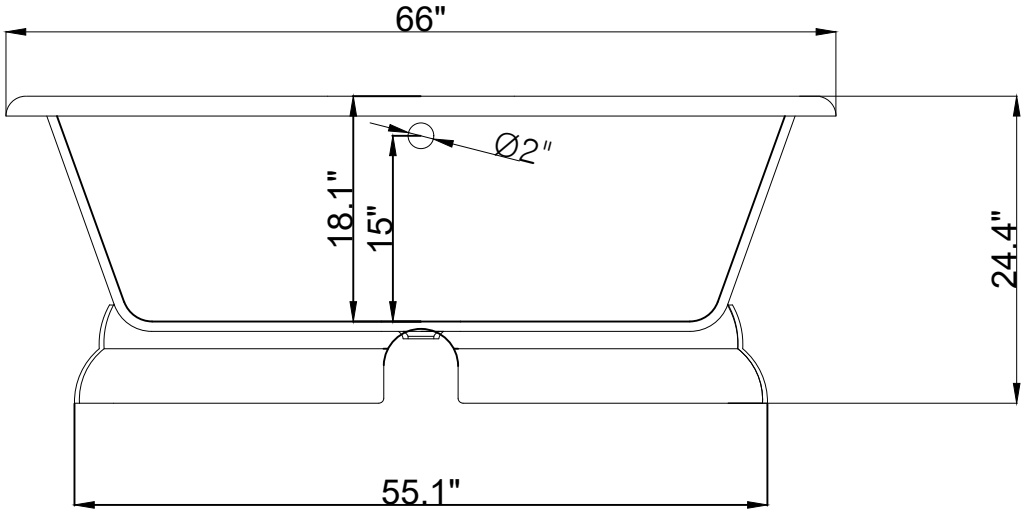


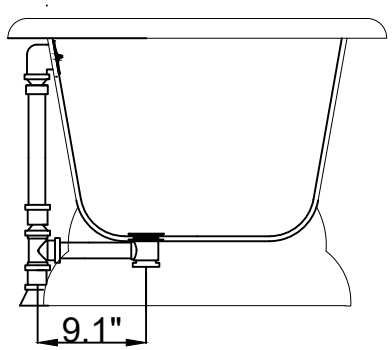


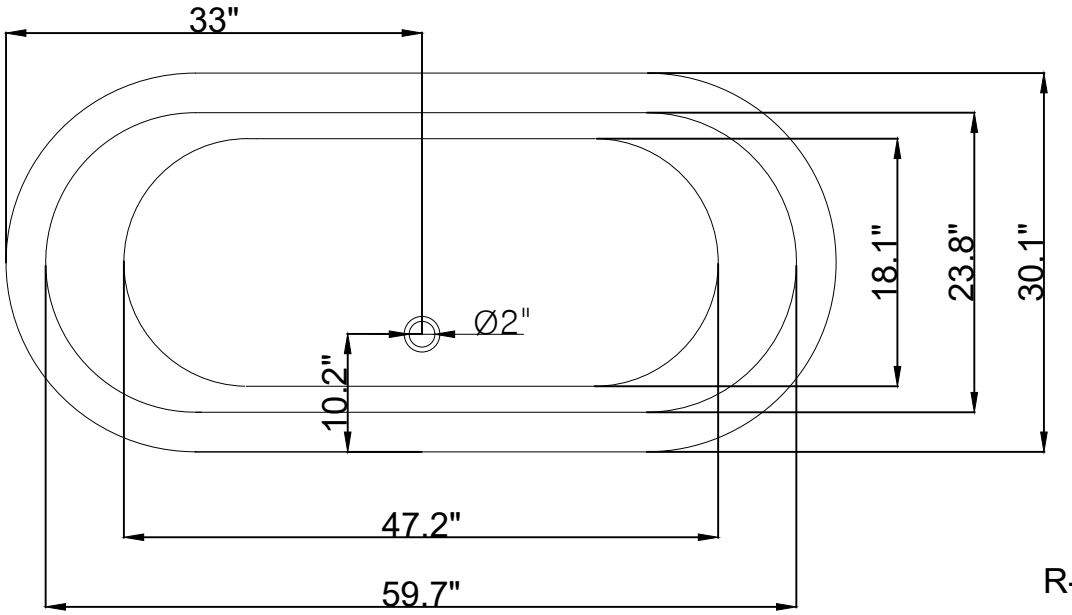


R-5080-66CIFSWH-FM