02 Fire Table

If you have any questions about the product, please feel free to contact us.

E-Mail: support@nestnookpatio.com

We recommend 2 people for assembly, with an estimated completion time of about 1.5 hours.

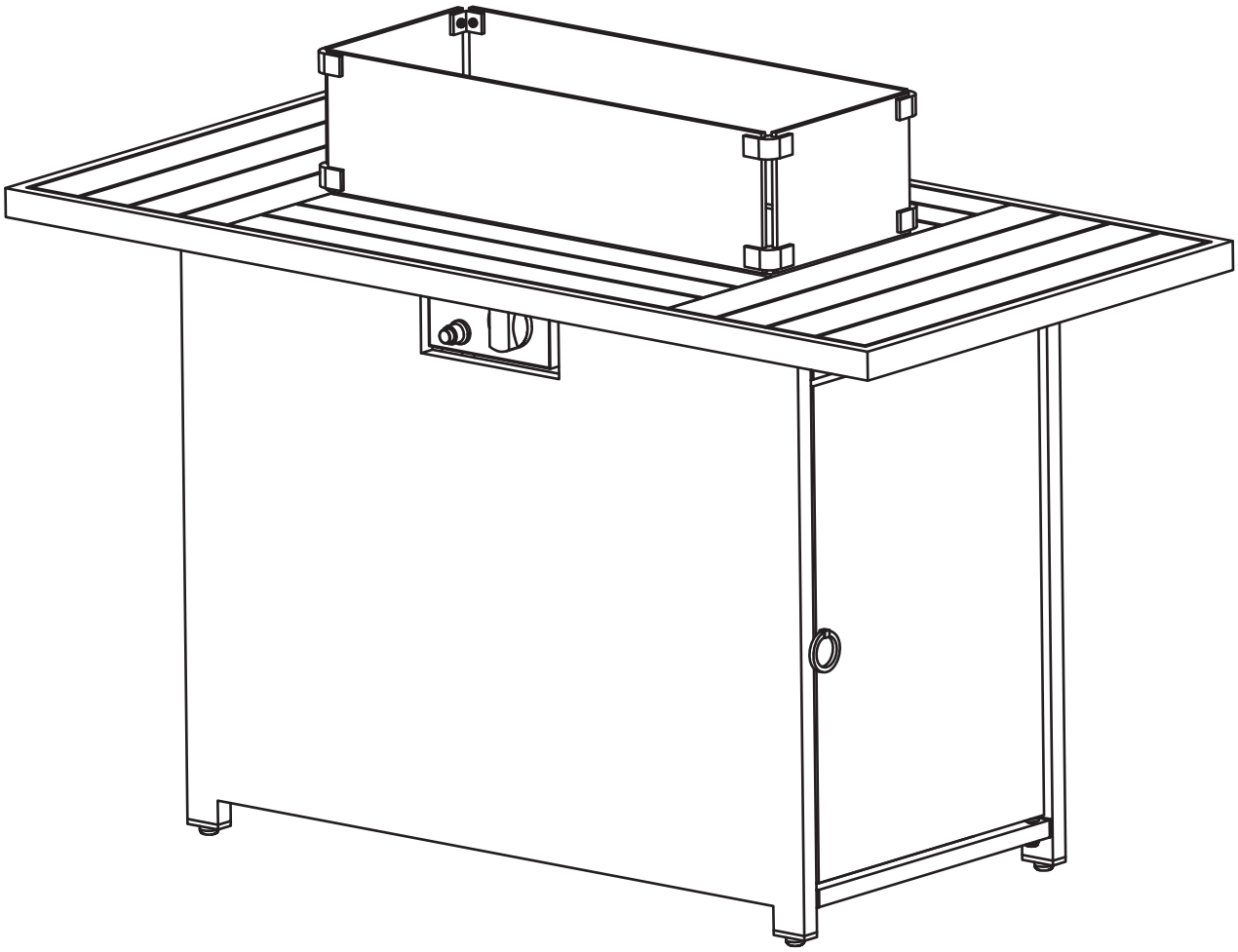

We highly recommend preparing your own power drill,
drill bits and ratchet wrench for easier assembly.
The Allen wrench included in the hardware pack are intended for backup use.

NOTICE ⚠

Please keep these instructions for future reference.

Dear Customer

● Thank you for your purchase. When you receive the product,please make sure that all parts are intact.Then follow the installation instructions to complete the assembly.

● During installation, do not fully tighten the screws right away. Make sure all screws are inserted and tightened to about 80% first, then fully tighten them.

If you encounter any of the following issues, please feel free to contact us:

A. The outer box is damaged.

B. The product is damaged, bent, or cracked when you open the box.

C. Parts, accessories, or assembly tools are missing.

D. The instructions are unclear or cannot be followed.

E. The product has functional problems.

F. Any other concerns or issues you are not satisfied with.

Please provide the following information: Platform, Order ID, and a description of the issue.

Our service team (support@nestnookpatio.com) will reply within 24 hours and will do our best to resolve the problem for you.

⚠ Please keep the original cartons for any returns. Refunds may be refused if other cartons are used.
Please check the integrity of all components and handle them with care during installation!

Please assemble the product on a protected surface, such as a carpet or soft mat, to avoid scratches or damage to floors during installation.

Exploded View Diagram

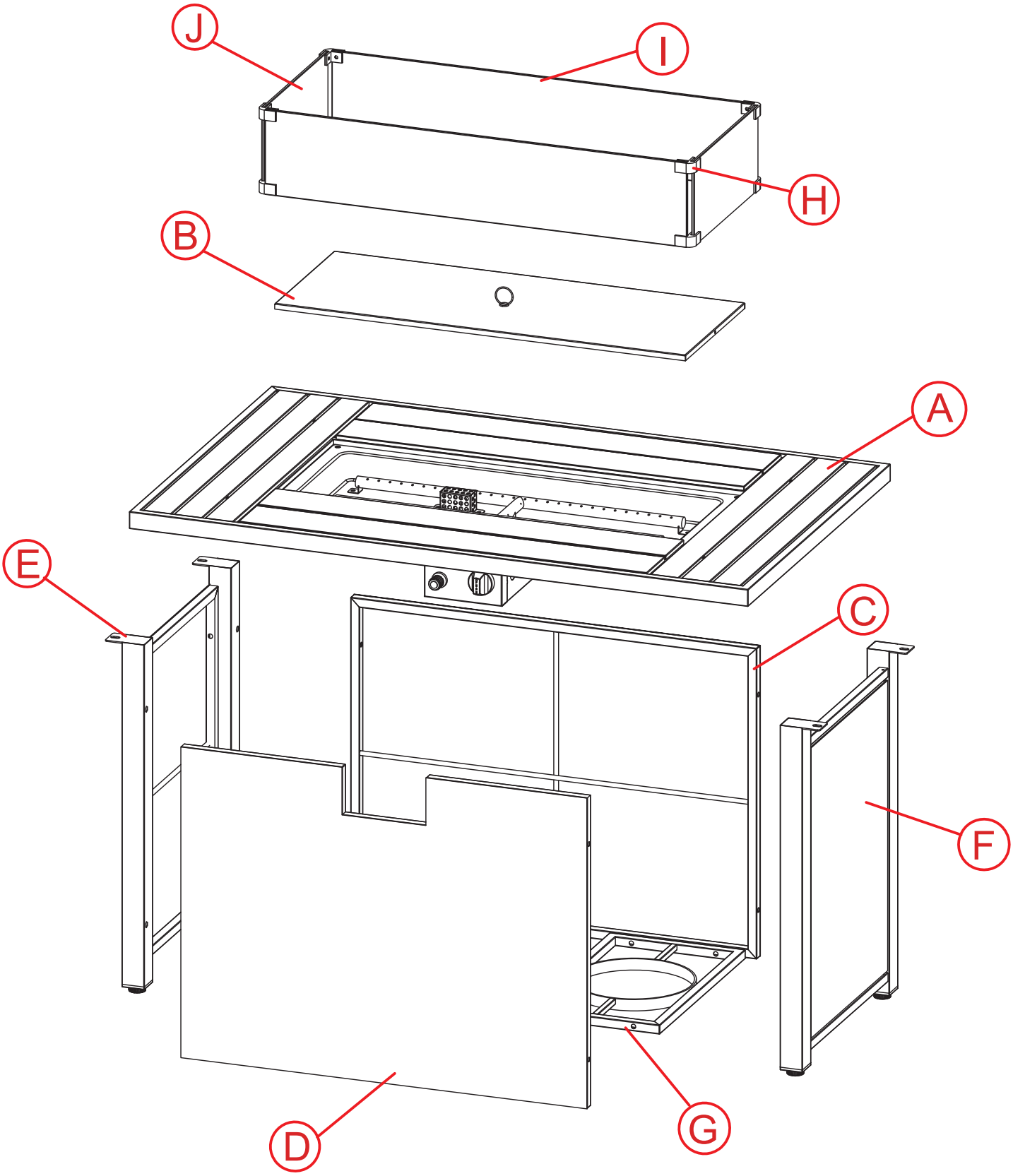

HARDWARE LIST

1 M6x15 mm	2 M6x30 mm	3 M6x35 mm	4 Φ6x12 mm	5 Cross Wrench
4 pcs	4 pcs	8 pcs	16 pcs	1 pc
6 M8x7 mm				
16 pcs				

PART LIST

A 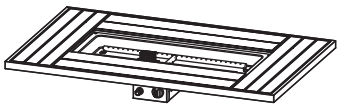	B 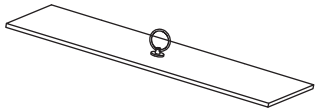	C 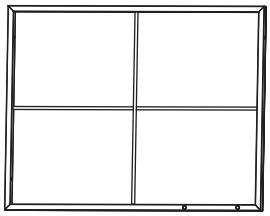	D 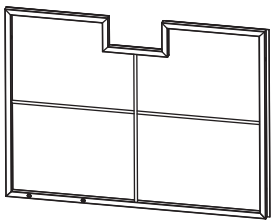
1 pc	1 pc	1 pc	1 pc
E 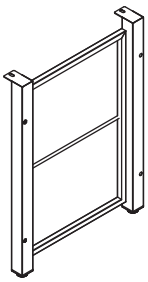	F 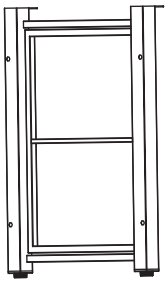	G 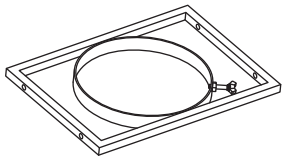	H 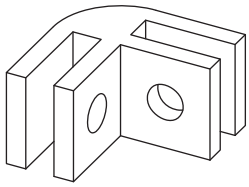
1 pc	1 pc	1 pc	8 pcs
I 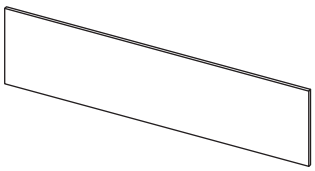	J 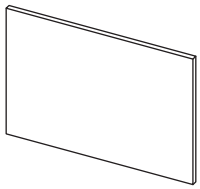	K 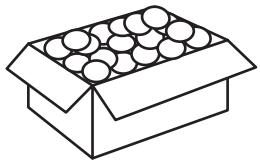	
2 pcs	2 pcs	1 pc	

1. Please ensure that all accessories are included before beginning assembly.

2. Some accessories may be attached together or packaged closely; please check carefully.

3. If any accessories are missing or damaged, please contact our service team for assistance.

E-Mail: support@nestnookpatio.com

STEP 1

NOTICE ⚠

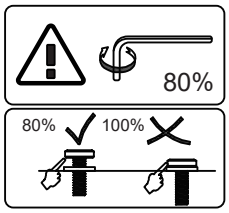

During installation, do not fully tighten the screws right away. Make sure all screws are inserted and tightened to about 80% first, then fully tighten them.

Ⓒ 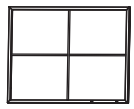 1 pc	Ⓓ 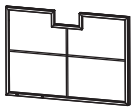 1 pc
Ⓔ 1 pc	③ M6x35 mm 4 pcs
	④ Φ6x12 mm 4 pcs

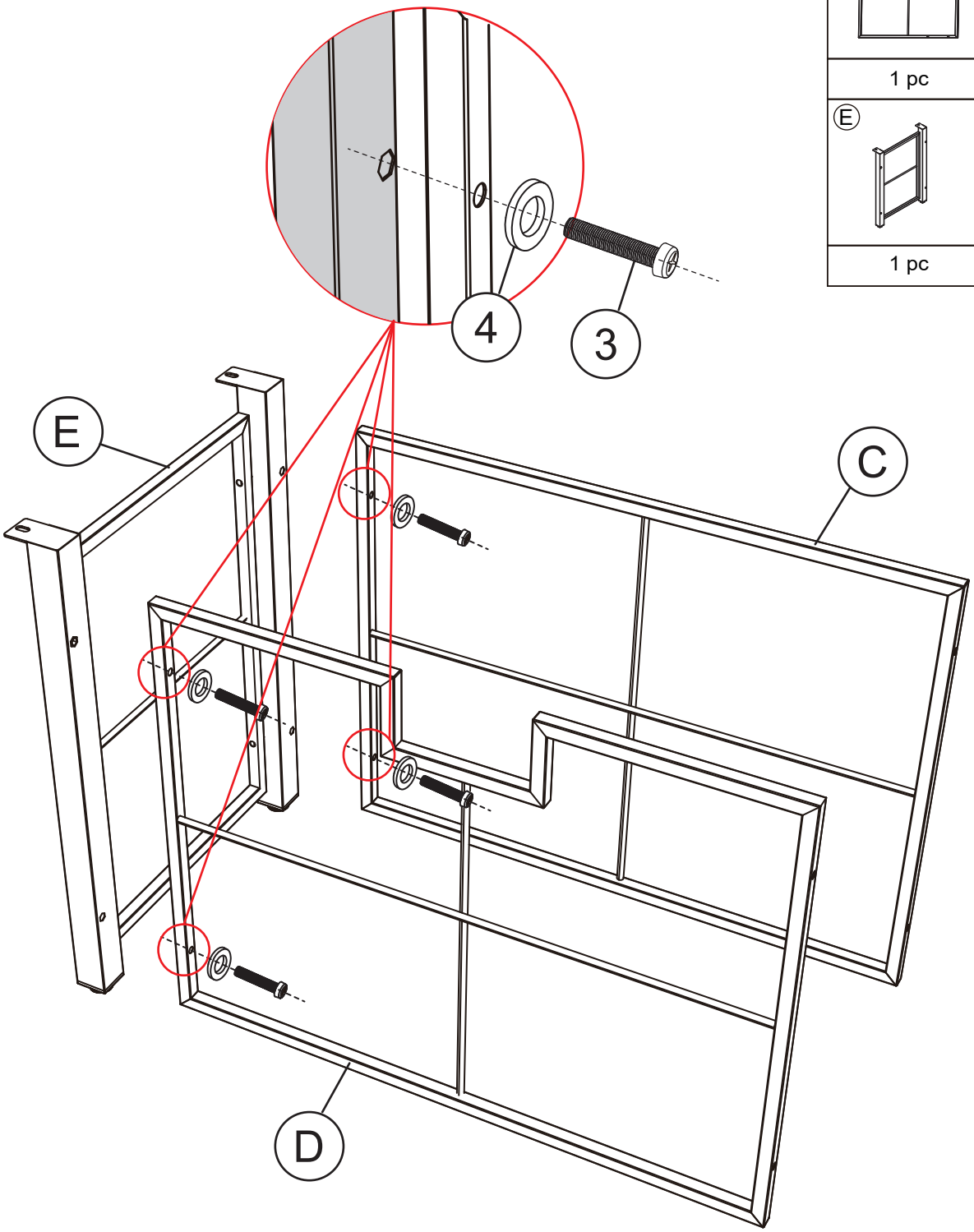

STEP 2

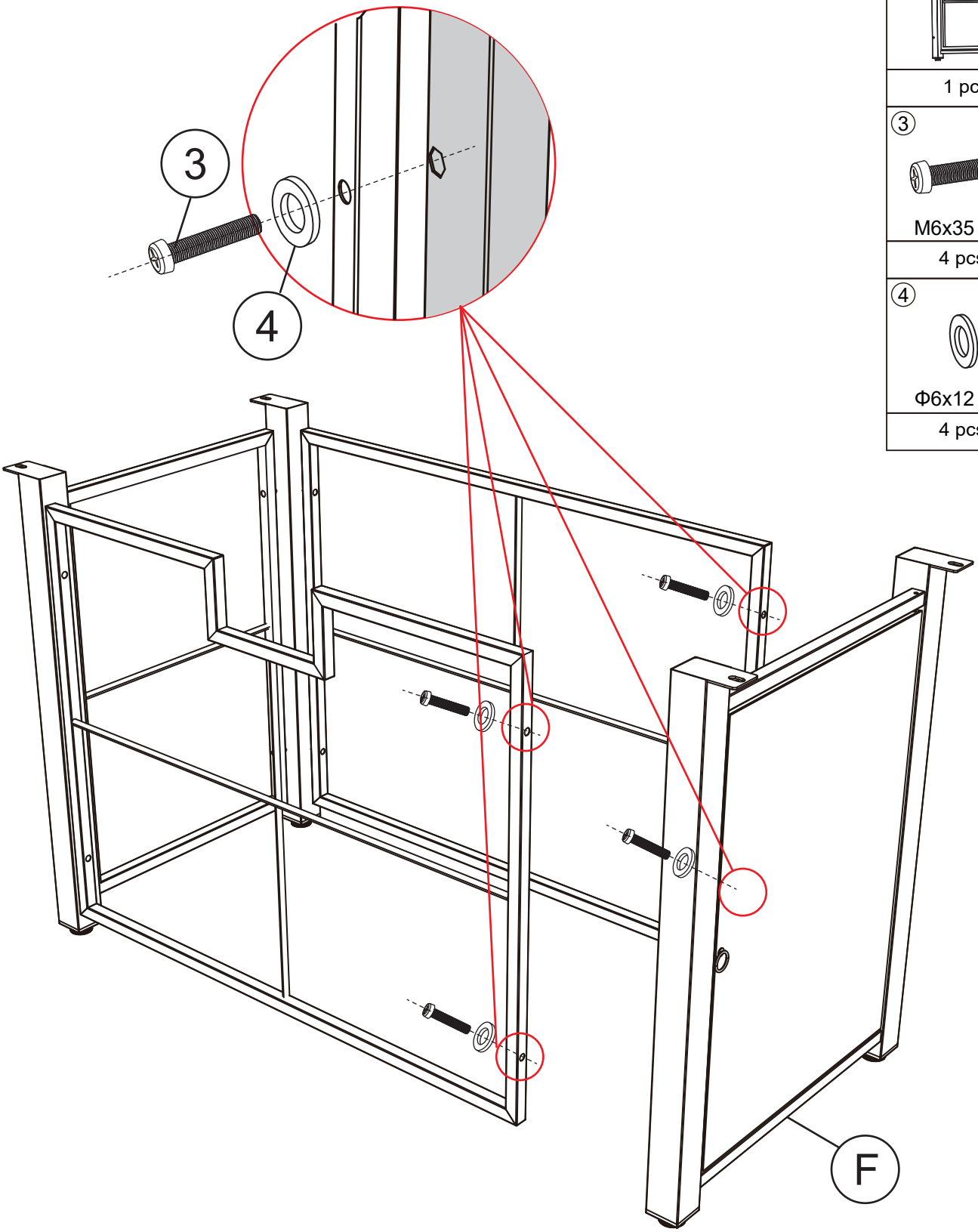

Ⓕ	1 pc
③ M6x35 mm	4 pcs
④ Φ6x12 mm	4 pcs

STEP 3

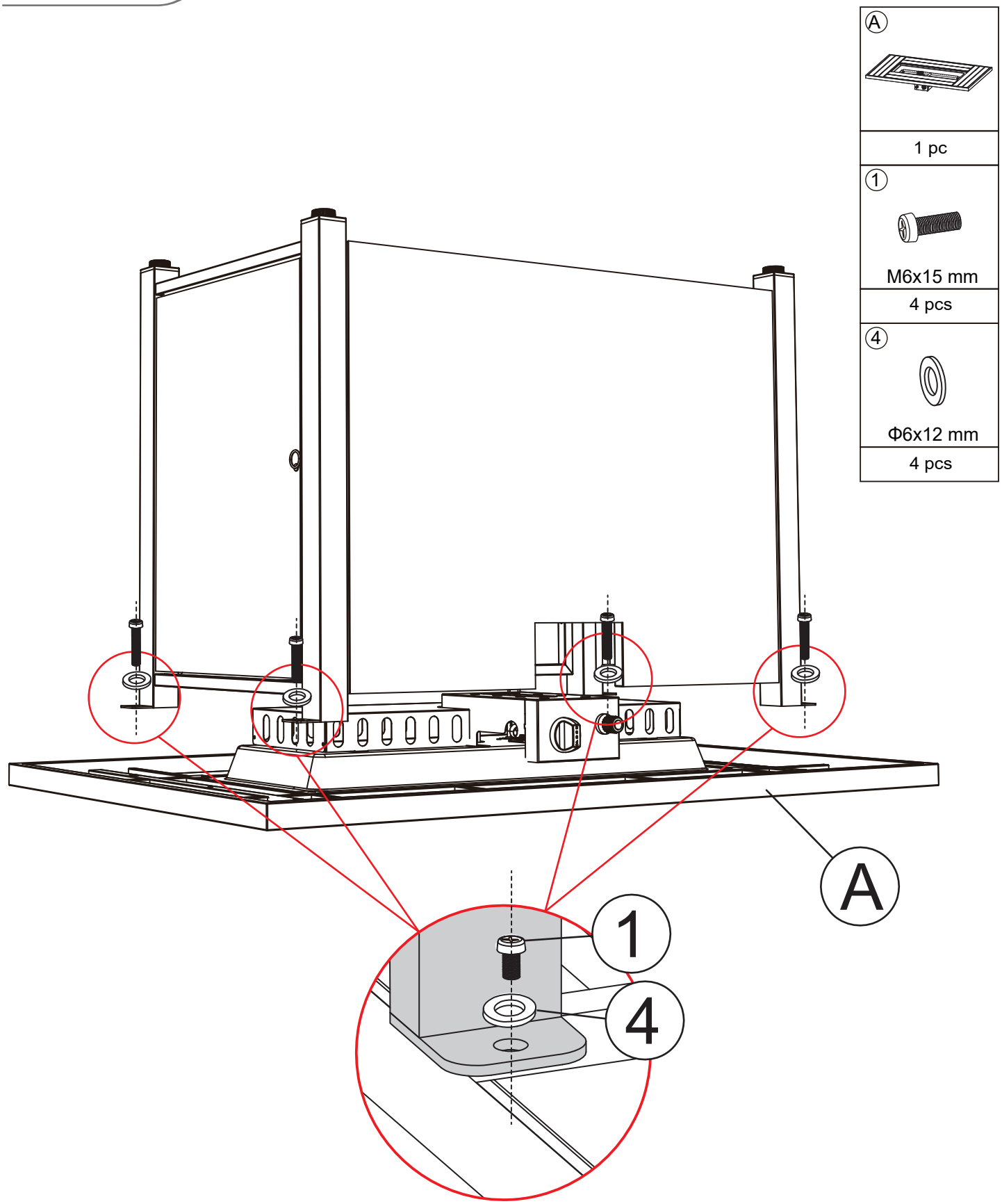

STEP 4

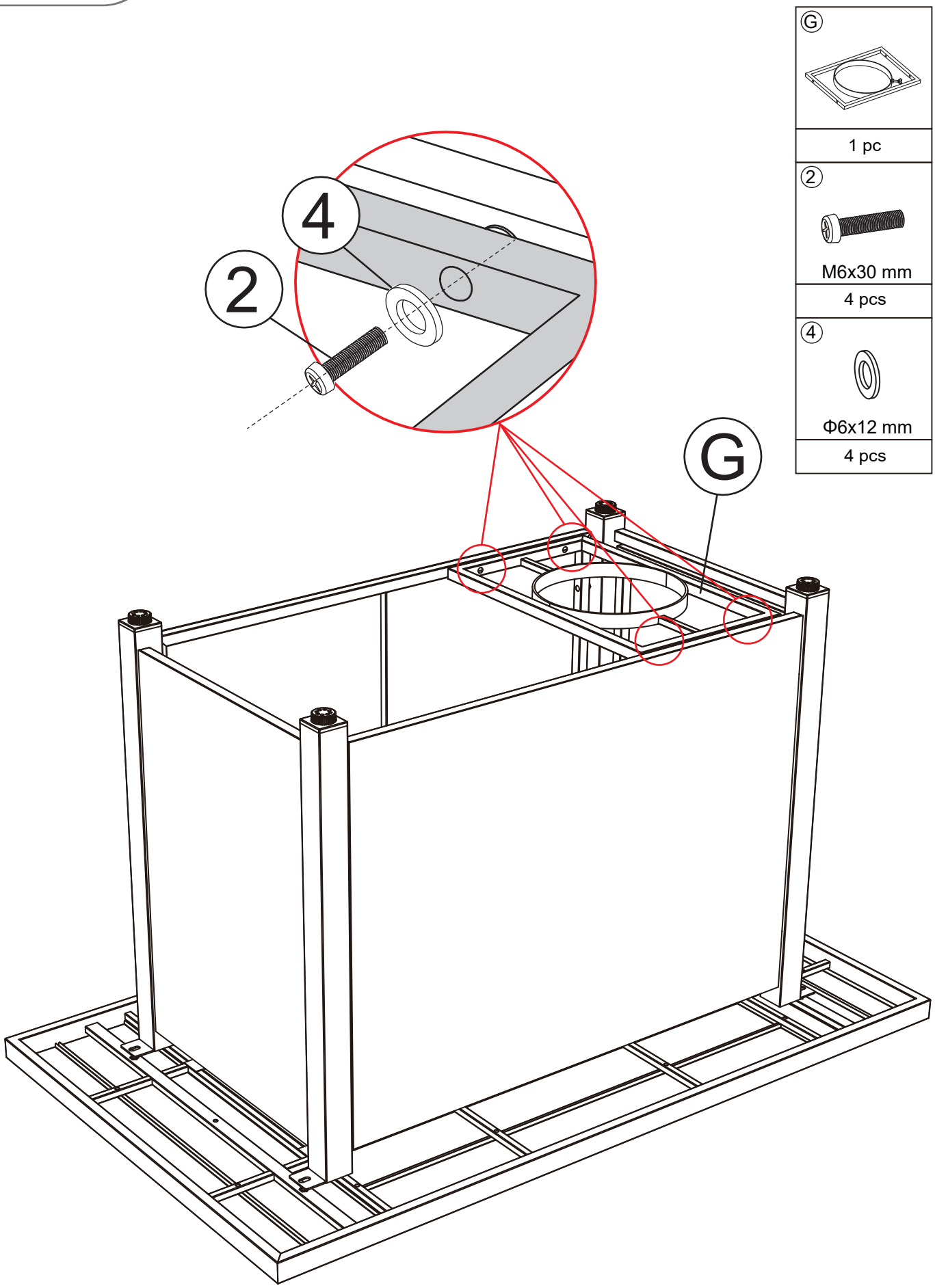

STEP 5

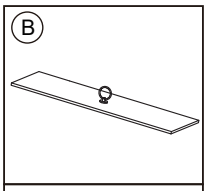

1 pc

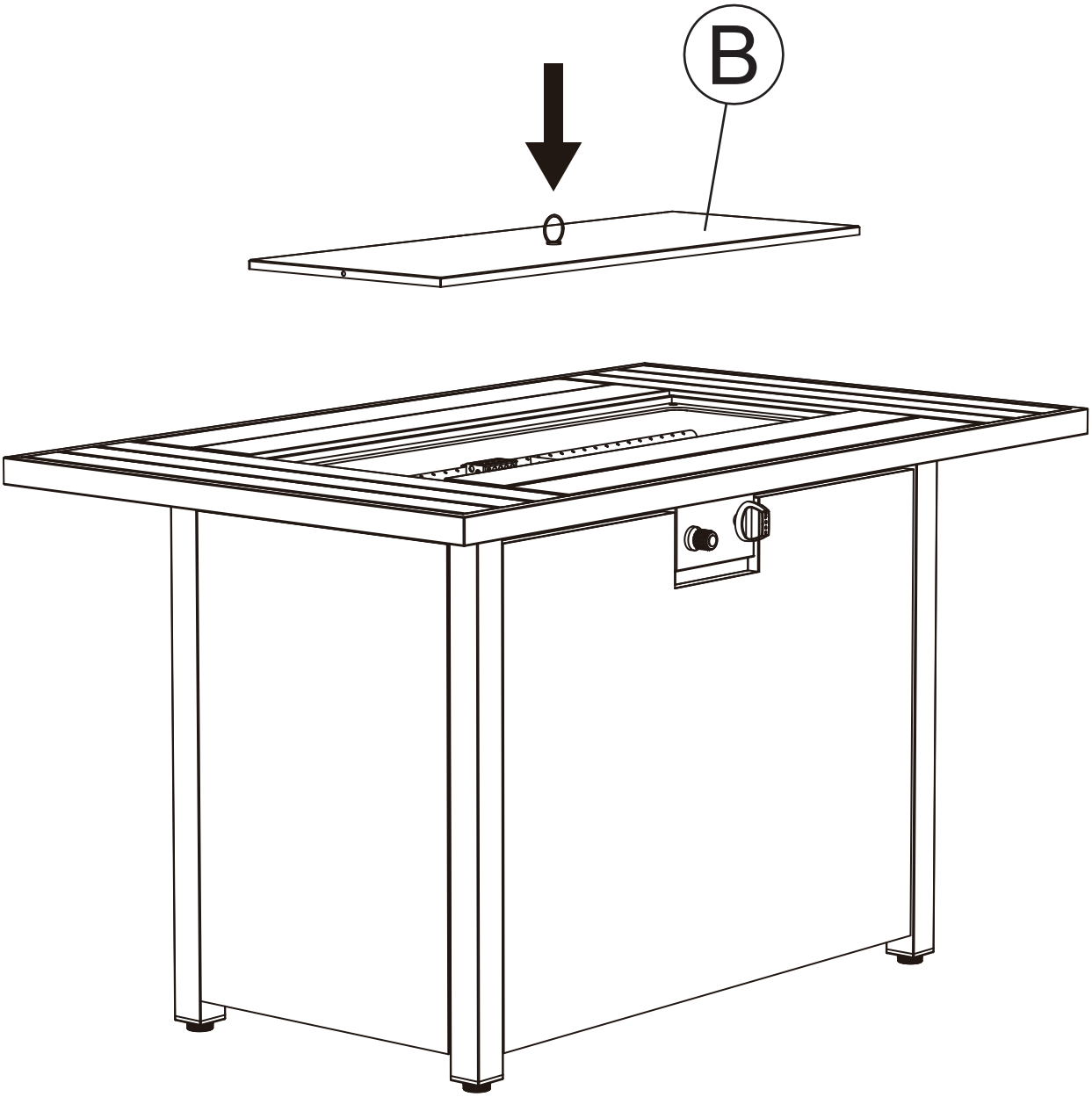

STEP 6

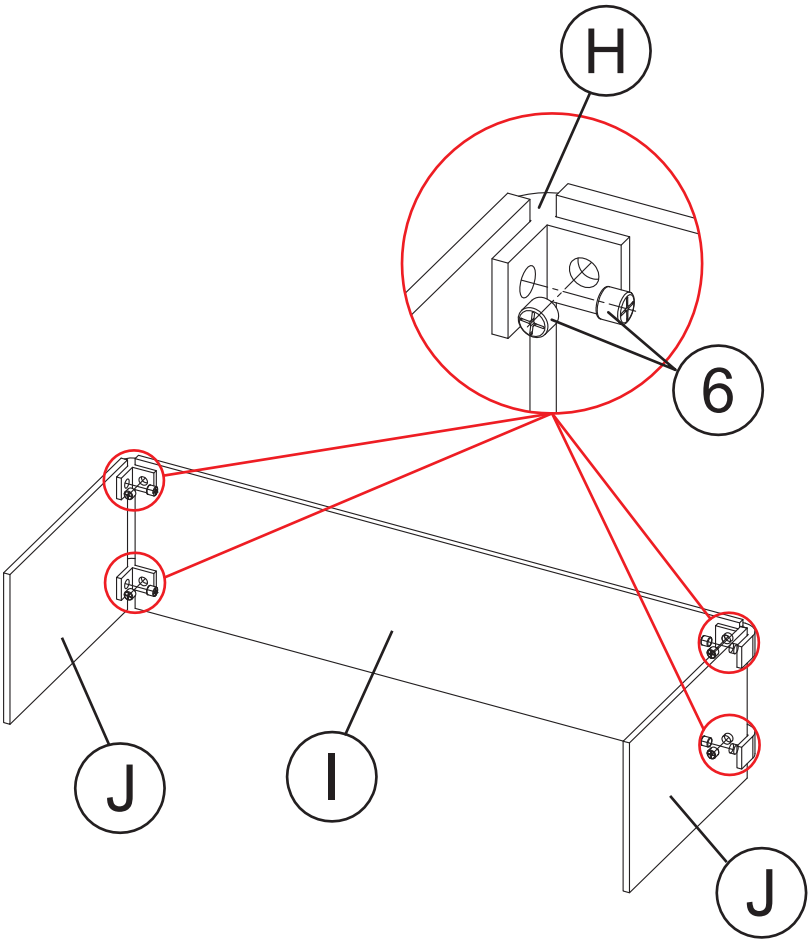

H 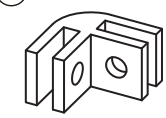	8 pcs
I	2 pcs
J 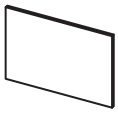	2 pcs
6 M8x7	16 pcs

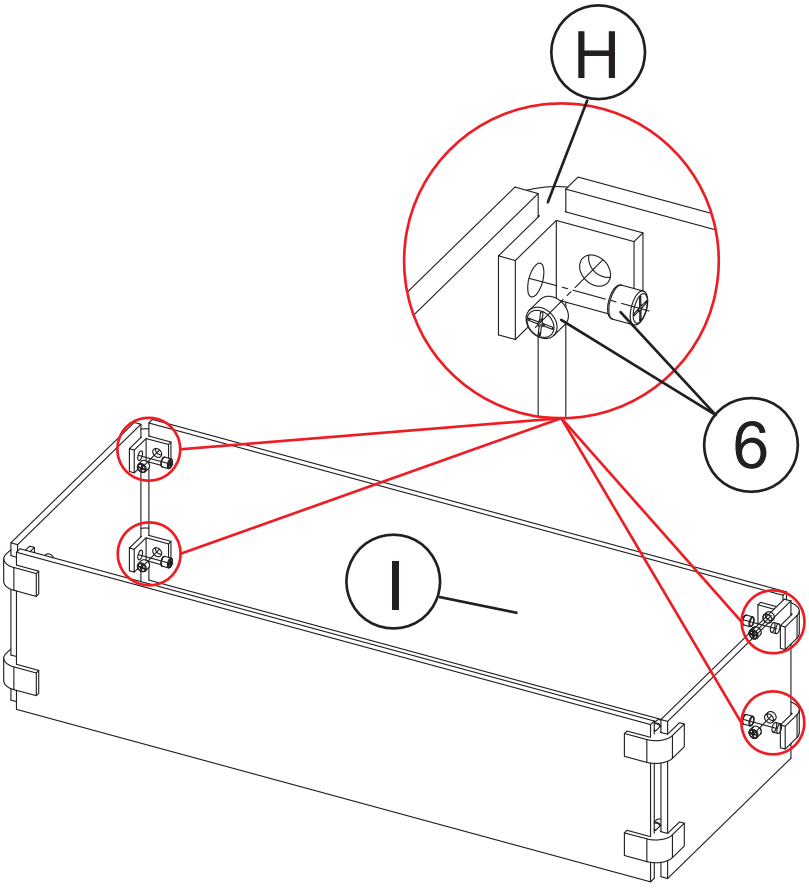

STEP 8

Once assembly is complete,
please ensure that all screws are fully tightened.

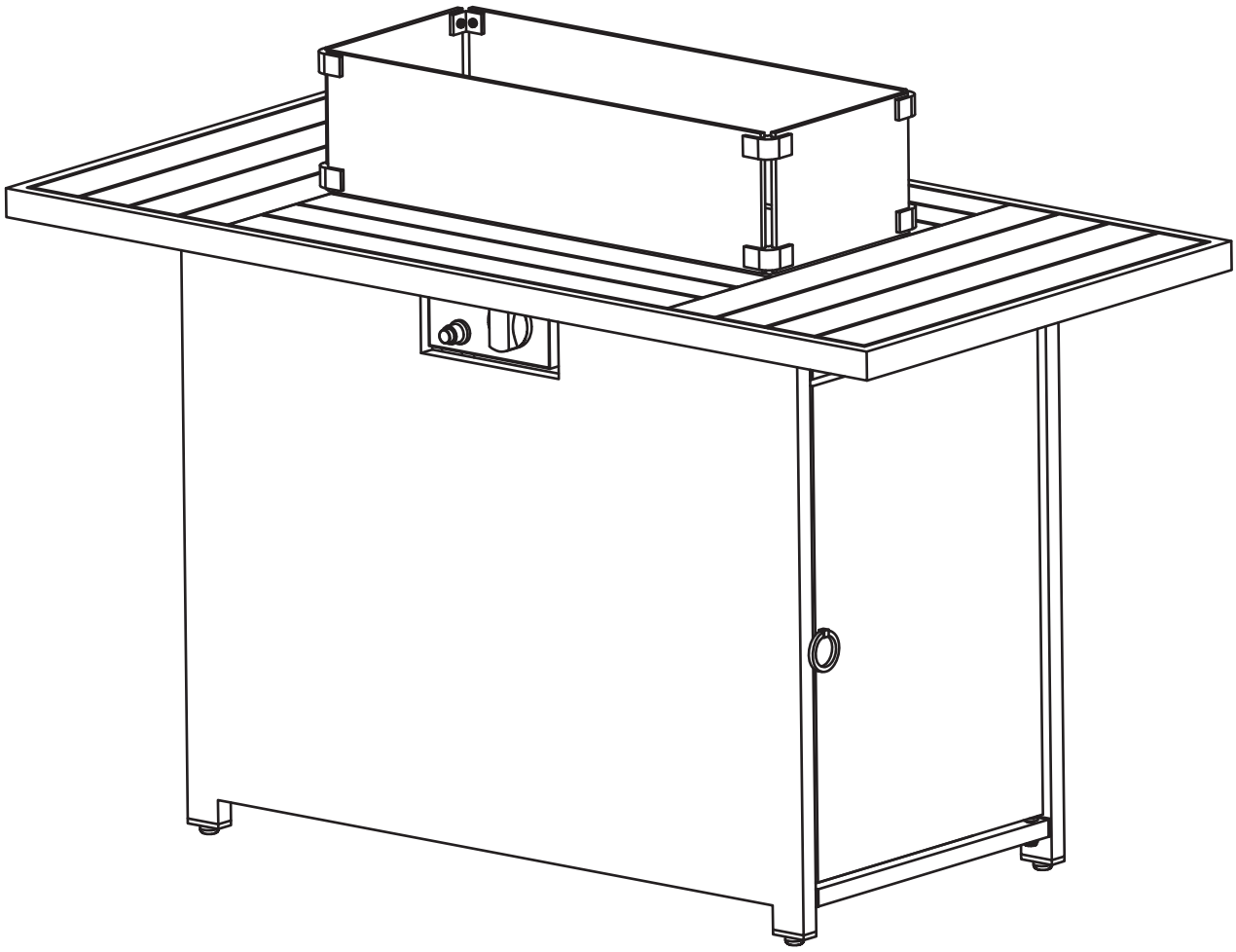

STEP 9

LIGHTING INSTRUCTIONS:

1. Read instructions before lighting;
2. Push and turn the knob to LOW;
3. Hold igniter to light the burner,
   release control knob after 15 seconds;
   if burner does not light, wait 5 minutes, repeat;
4. Adjust flame to desired flame with the control knob.

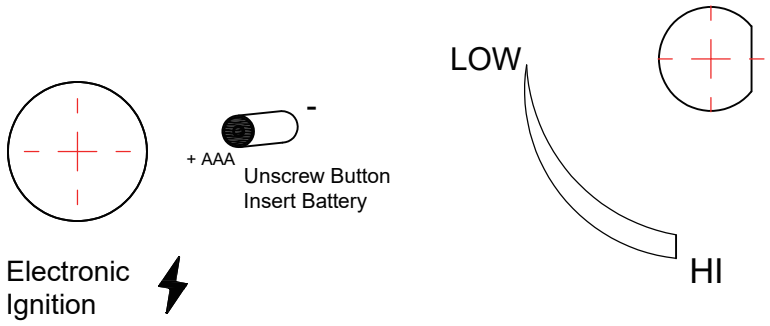

STEP 7

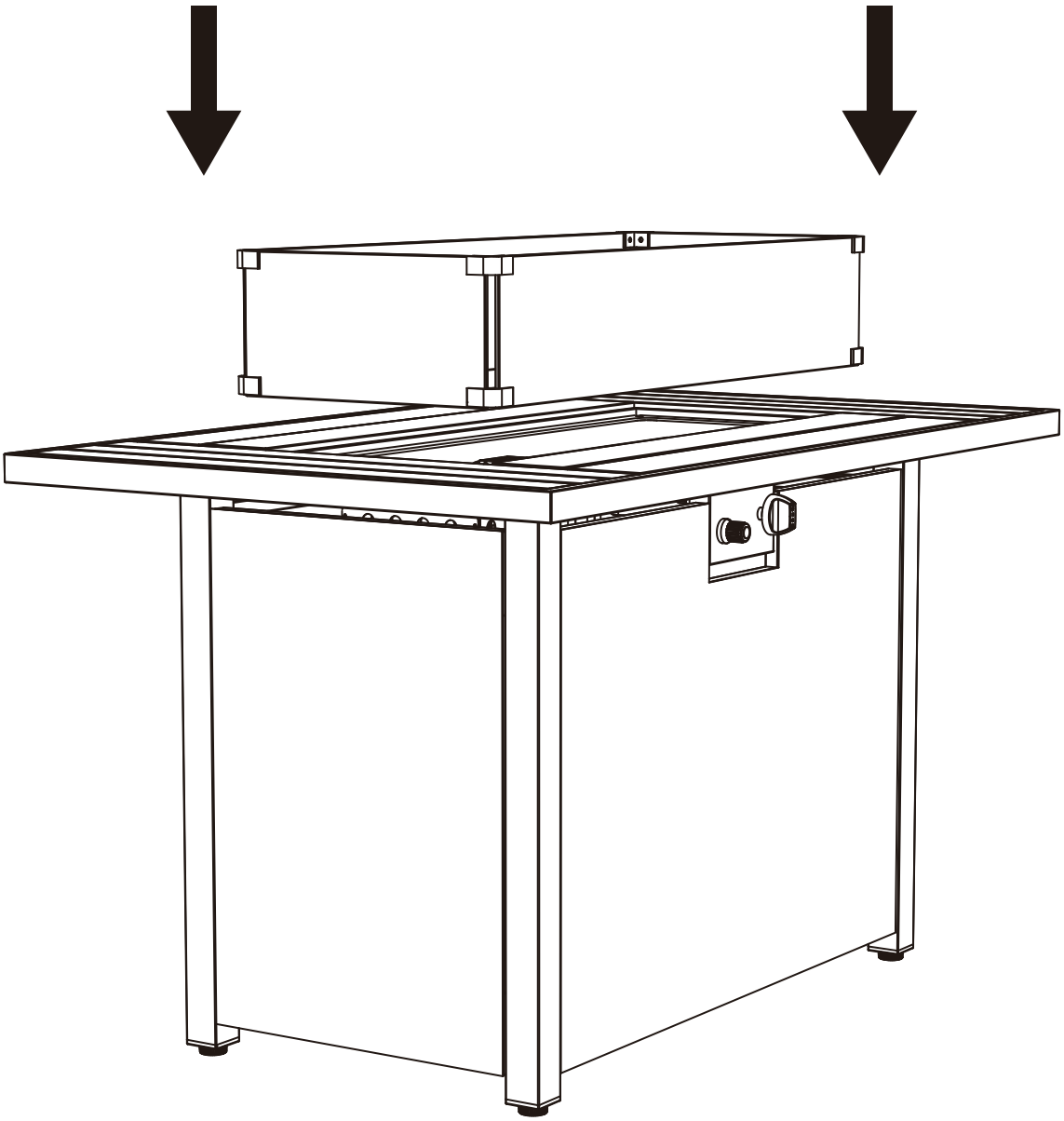

Customer Service & Warranty

Thank You for Your Purchase!
We hope you enjoy your new furniture.
Your satisfaction is our priority!

Questions or Issues?

If you have any questions or notice any defects, please contact us first.
Our customer service team will reply within 24 hours and assist you until you're satisfied.

Warranty

This product is covered by a 1-year limited warranty for manufacturing defects.
Please keep your receipt and original packaging for warranty claims.

Share Your Experience

We'd love to see how your furniture enhances your outdoor space! Share photos or feedback with us at:

support@nestnookpatio.com

Wicker (PE) Care

- Remove all cushions.
- Rinse thoroughly with a garden hose (or pour clean water if no hose is available).
- Mix mild soap with lukewarm water.
- Clean gently with a soft brush or sponge, reaching between the weave to loosen dirt.
- Rinse again until all soap residue is gone.
- Allow the furniture to air dry completely.

Fabric Care

- Outdoor fabrics resist water, but prolonged or heavy rain can still wet the foam.
- If cushions get wet, unzip the covers and stand cushions upright to dry.
- Expect 1–3 days of drying time depending on weather and humidity.
- Always ensure cushions are fully dry before use or storage to extend foam longevity.

Aluminum Frame Care

- Clean with mild soap and water using a non-abrasive cloth.
- Rinse thoroughly.
- For stubborn buildup, use white vinegar mixed with lukewarm water.
- Aluminum is naturally rust-resistant and low-maintenance.

Steel Frame Care

- Wipe with mild soap and water to remove dirt.
- Avoid prolonged standing water on the surface, as moisture can reduce coating durability.
- Inspect the powder-coated finish periodically. If you notice chips or scratches, touch up promptly with outdoor metal paint to prevent rust from developing.
- Rinse and dry fully after cleaning.

Winterizing Your Furniture

- If possible, store furniture indoors in a dry, temperature-stable area.
- If left outdoors:

– Remove cushions and spot-clean before storage.
– Store cushions in a dry area above 40°F (4°C).
– Keep frames upright to prevent water accumulation inside tubing.
– Cover frames with a high-quality, well-fitting outdoor furniture cover.