ASSEMBLY INSTRUCTIONS
Chandelier

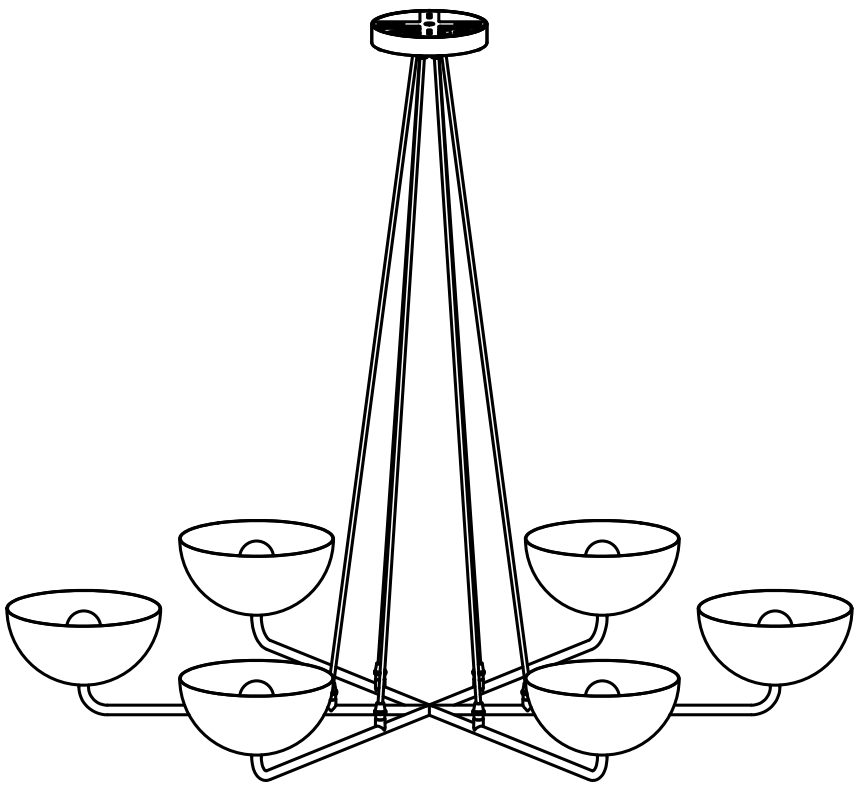

HARDWARE LIST			
A	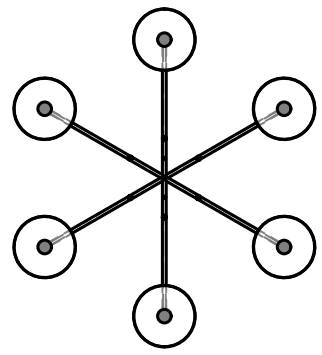	Set of Chandelier	01
B	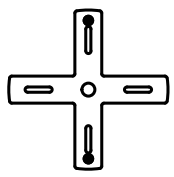	Mouting Plate	01
C	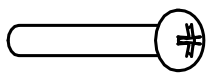	Bolt M4 x 30 mm	02
D		Flat Washer M4	04
E		Hex Nut M4	04
F		Decorated Nut M4	02
G		Plastic Washer M4	02
H	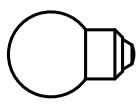	Bulb Light G45/E26	06

Step 1: Install the bulb light into the holder

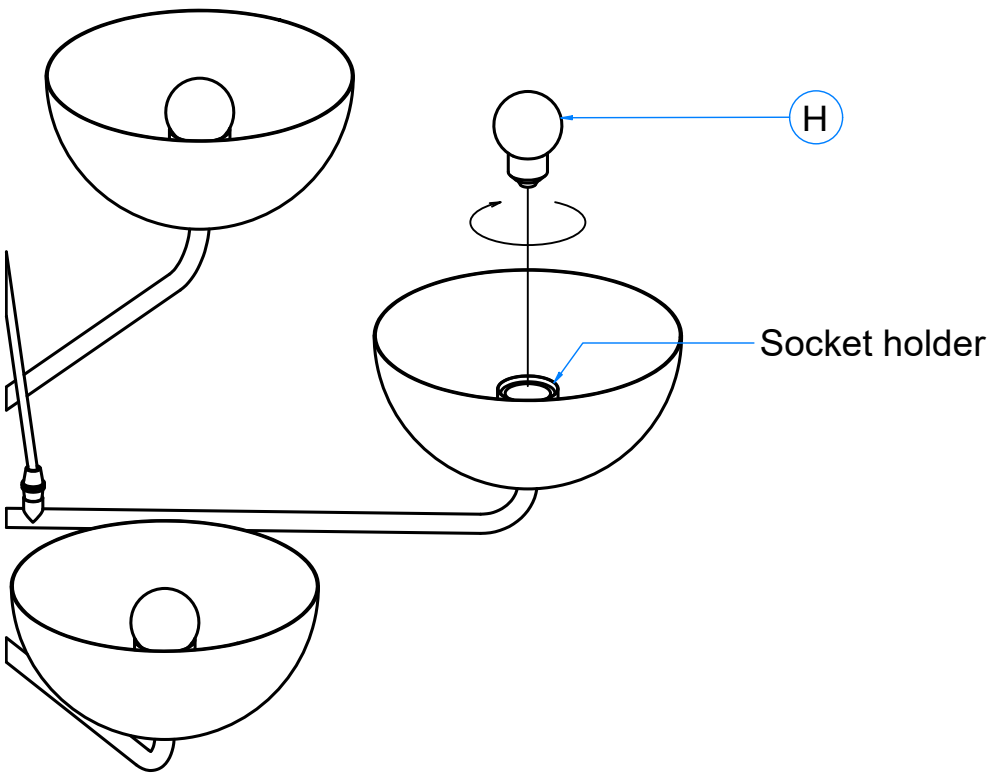

ASSEMBLY INSTRUCTIONS
Chandelier

Step 2: Attach the lamp mounting into junction box by using M4 screws and washers.

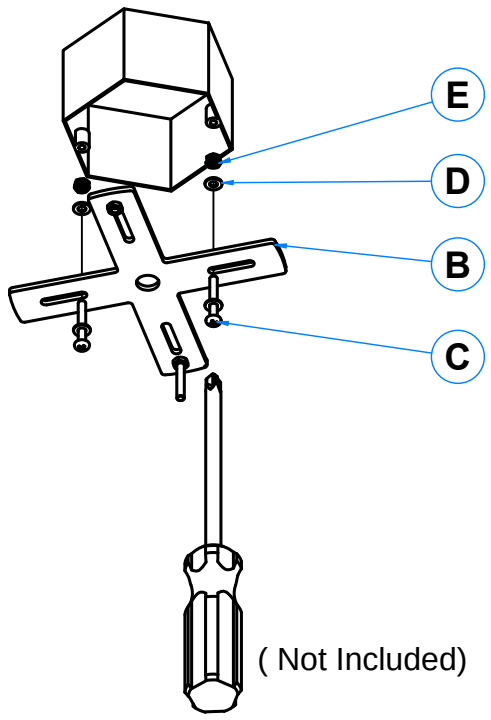

Step 3: Connect the lamp wire with electric system

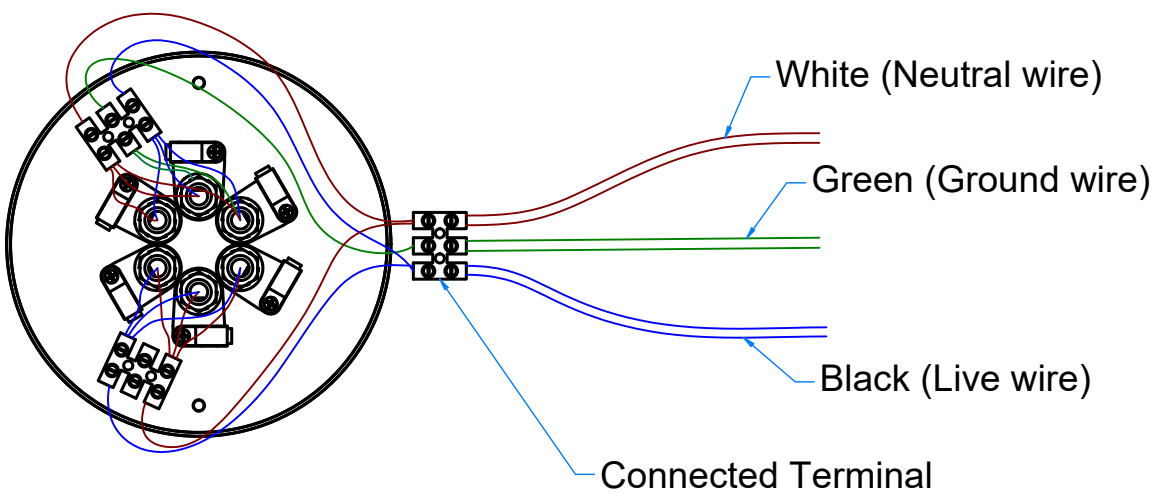

Step 4: Fixing the lamp's canopy with mounting plate by using the decor nut M4 and plastic washer.

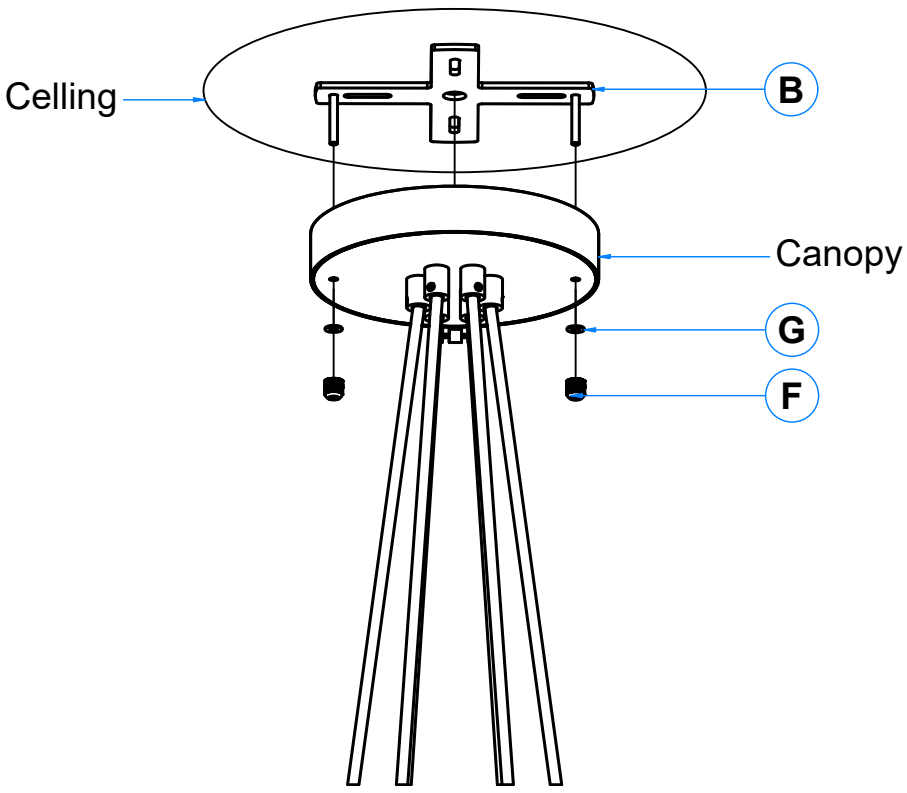

ASSEMBLY INSTRUCTIONS
Chandelier

WIRING CONNECTIONS

1. Shut down the power at the breaker panel.
2. Connect wires:
   Ground wire: Connect fixture ground wire (green) to supply ground wire
   Neutral wire: Connect fixture neutral wire (white) to supply neutral wire
   Hot wire: Connect fixture hot wire (black) to supply hot wire
3. Make sure all connections are tight, then carefully tuck into the junction box

IMPORTANT SAFETY INSTRUCTIONS

Use an authorized and certified electrician for consultation and installation. Electrician must be familiar with commercial-type applications of very heavy chandeliers.

The ceiling must have at least the capacity of holding 5 times the weight of the chandelier. For this fixture, a ceiling capacity of at least 110 lb. (50 kg) is required.
Because this chandel ier is heavy, it will require at least two people or a lifter to install.

WARNINGS
All wires are connected. When unpacking, be careful not to pull wires, as a bad connection may result. Do not connect electricity until your fixture is fully assembled. Do not touch or look directly at the LED strip when fixture is illuminated. Keep flammable materials away from lit LED strip.

THIS PRODUCT IS NOT A TOY AND HAS NO PLAY VALUE.

STRANGULATION HAZARD
Keep cord at least 3 feet away from cribs, bassinets, and toddler beds.
Keep out of reach of children under 3 years of age.

WIRE ADJUSTMENT

Chandelier

Step 1: Disconnect the electricity of the light from the electrical system. Place the light in a flat location

Step 2: Remove all of wire from the terminal.

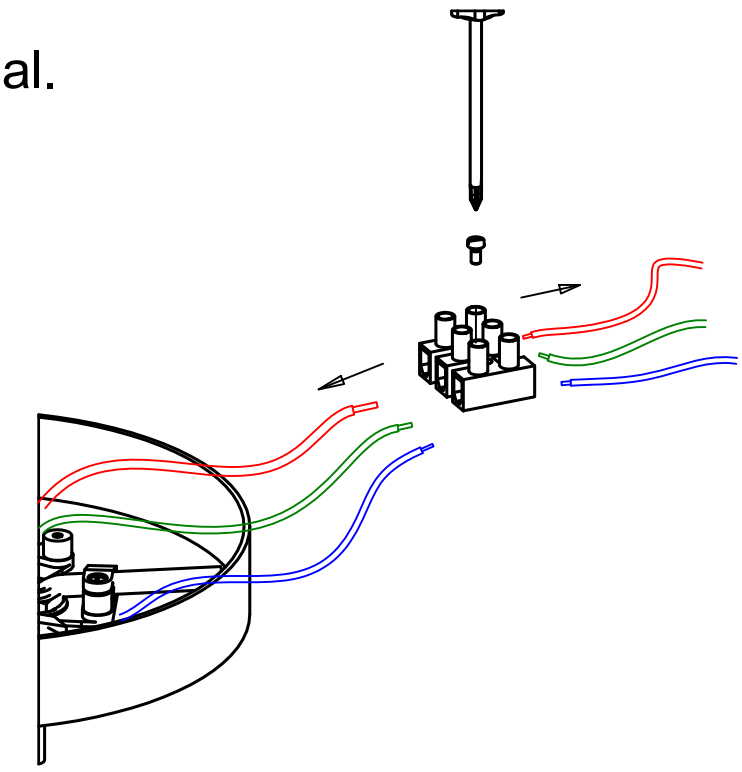

Step 3: Remove all of wire from wire clip on canopy.

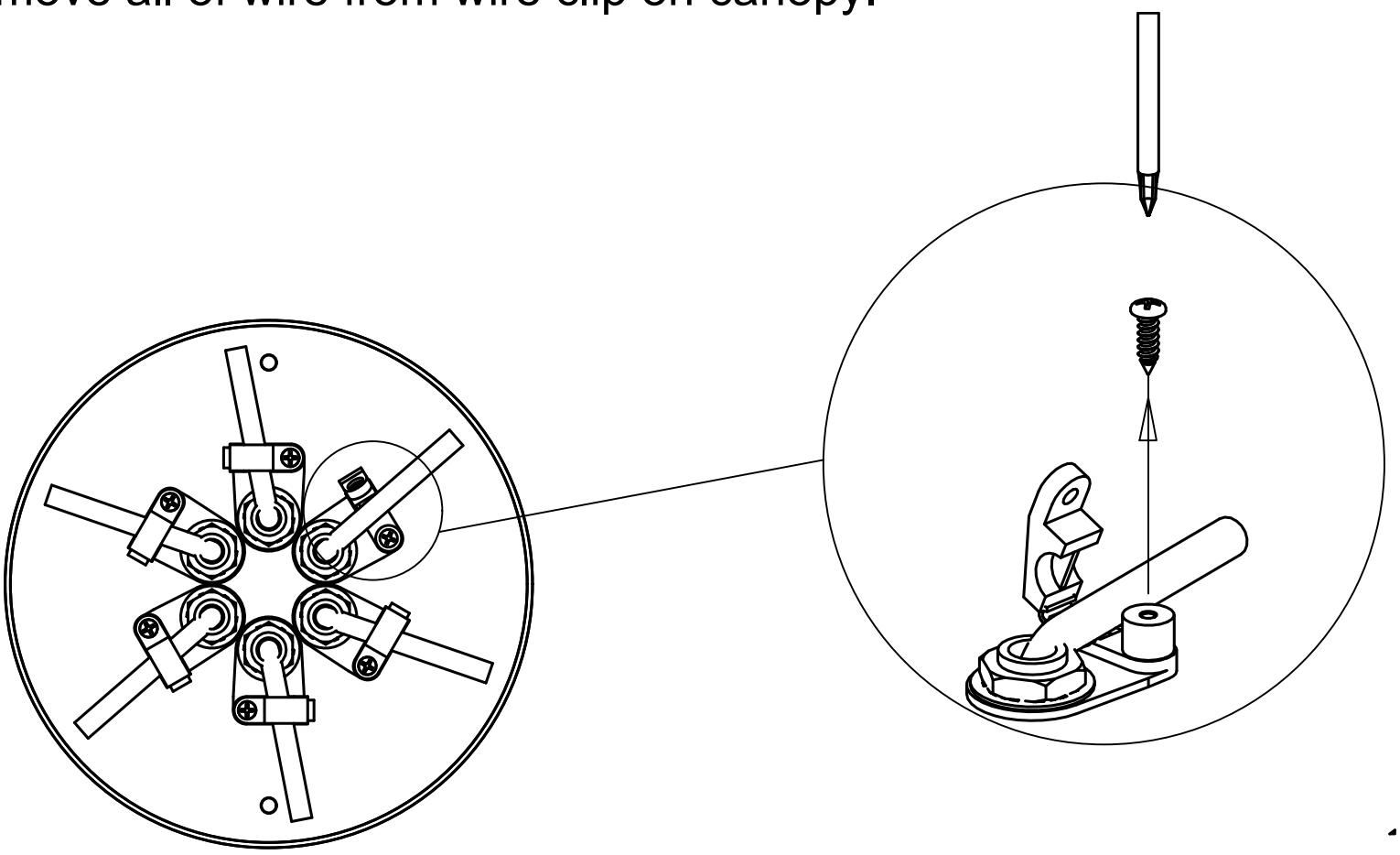

Step 4: Loosen the plastic screw in the thread socket under the canopy. There are a total of 6 screws that need to be loosened.

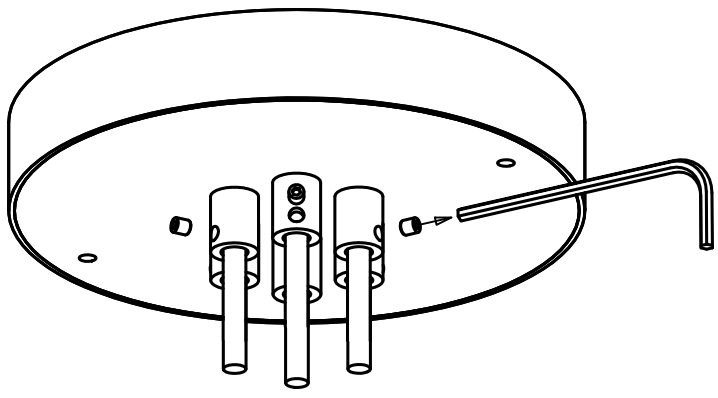

WIRE ADJUSTMENT

Chandelier

Step 5: Determine the length that needs to be changed. Cut the electrical wire into 6 equal segments.
Secure the electrical wires by using wire clamps/ties.
After that, proceed to connect the electrical wires according to the electrical diagram.

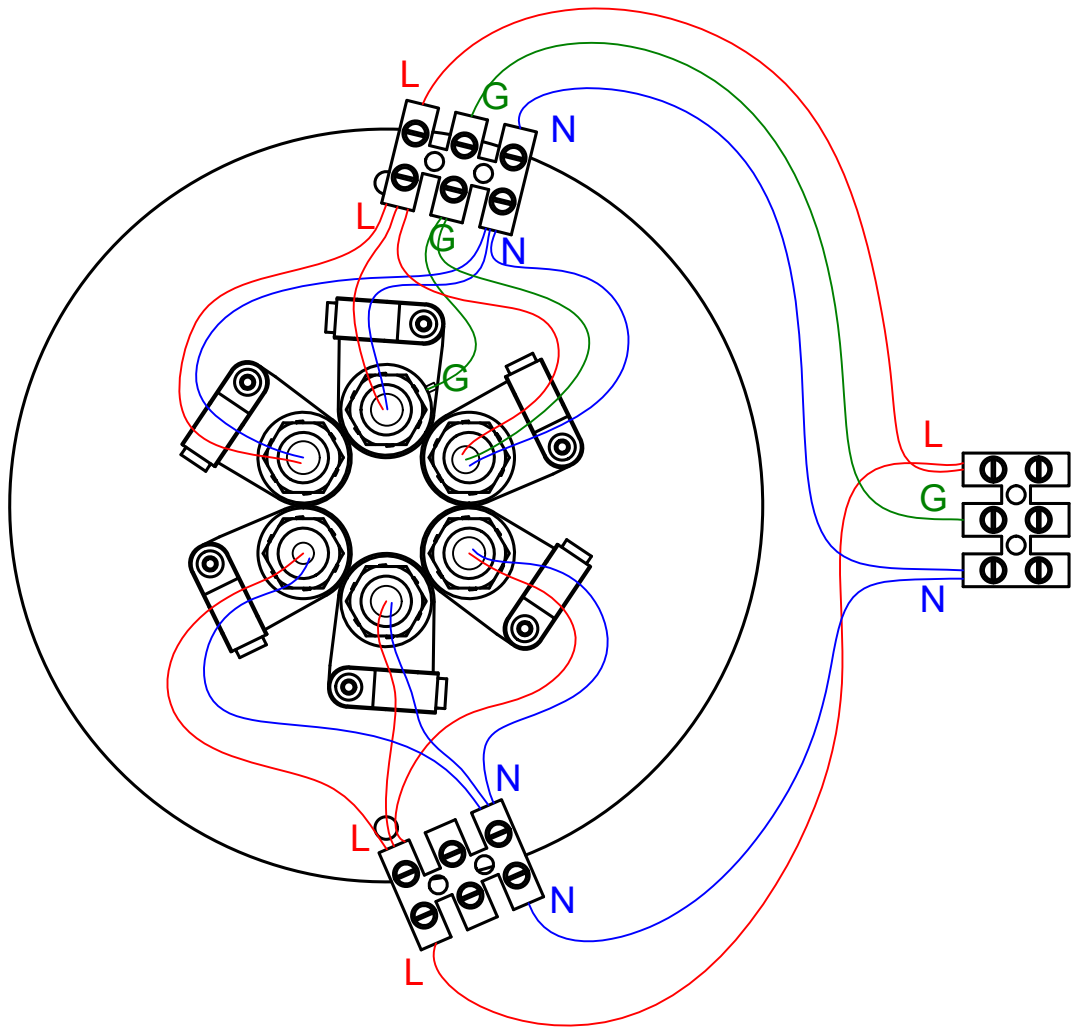

Step 6: Tighten back the plastic screws under the canopy.

Step 7: Reinstall the lamp according to the assembly instruction.