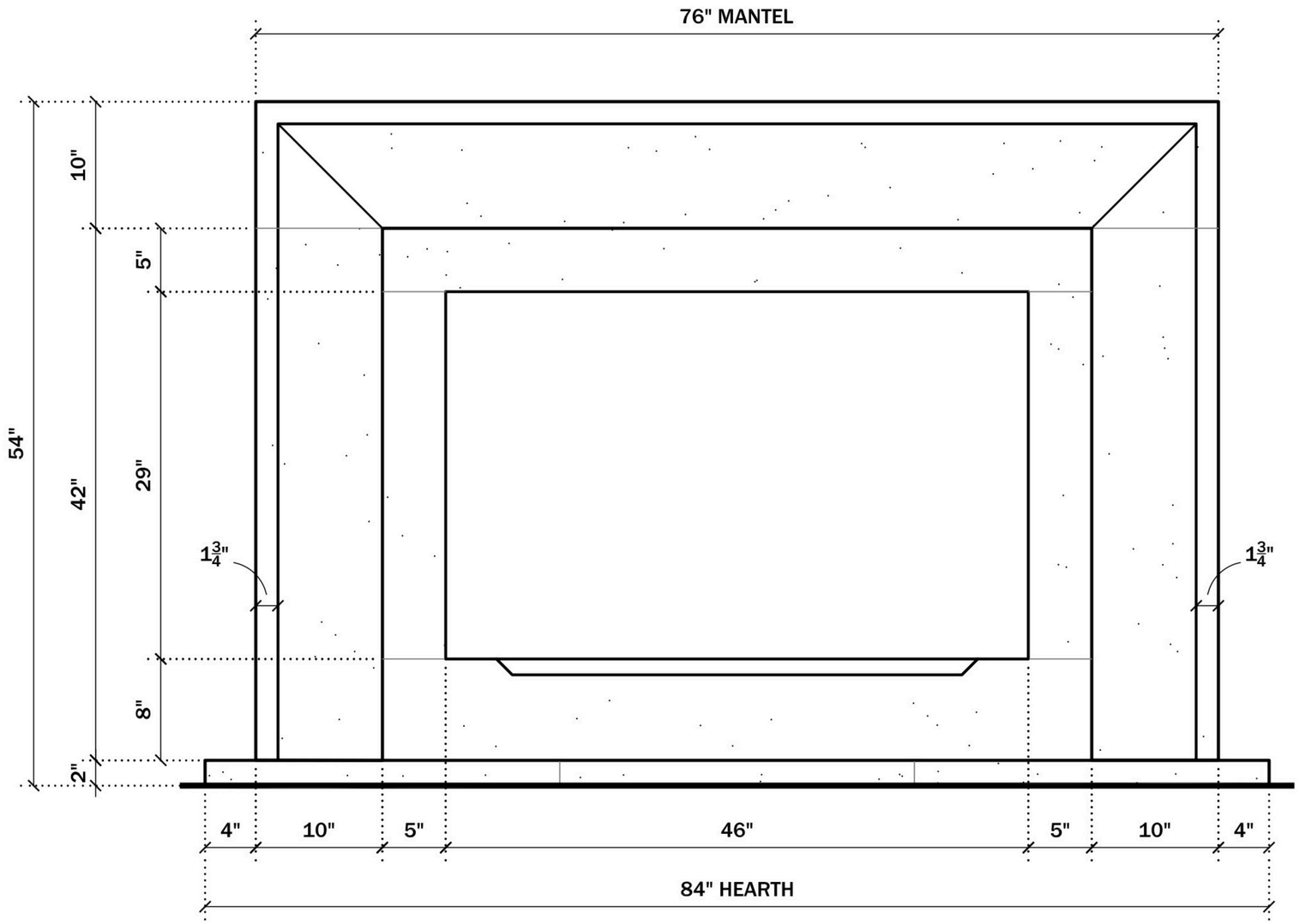


FRONT ELEVATION

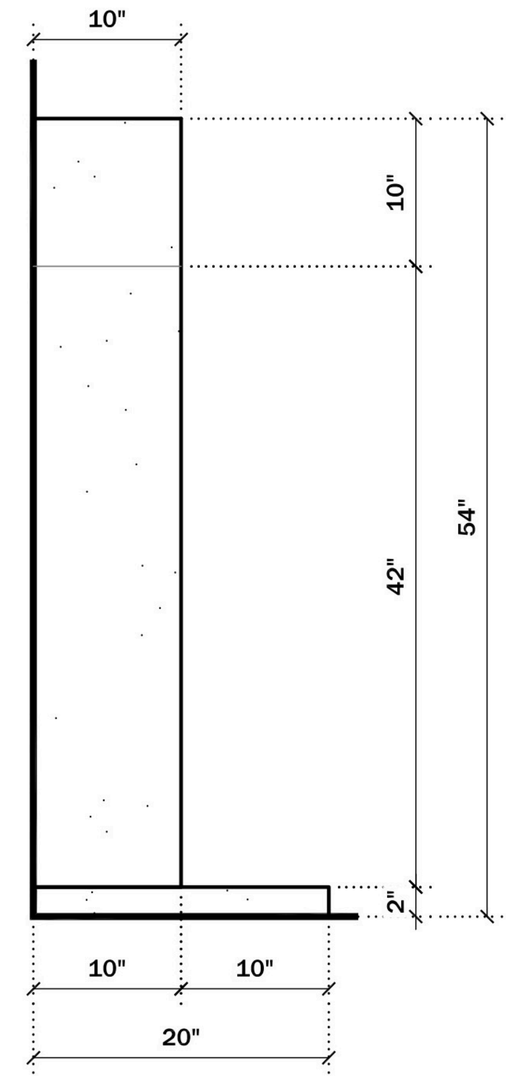


SIDE VIEW

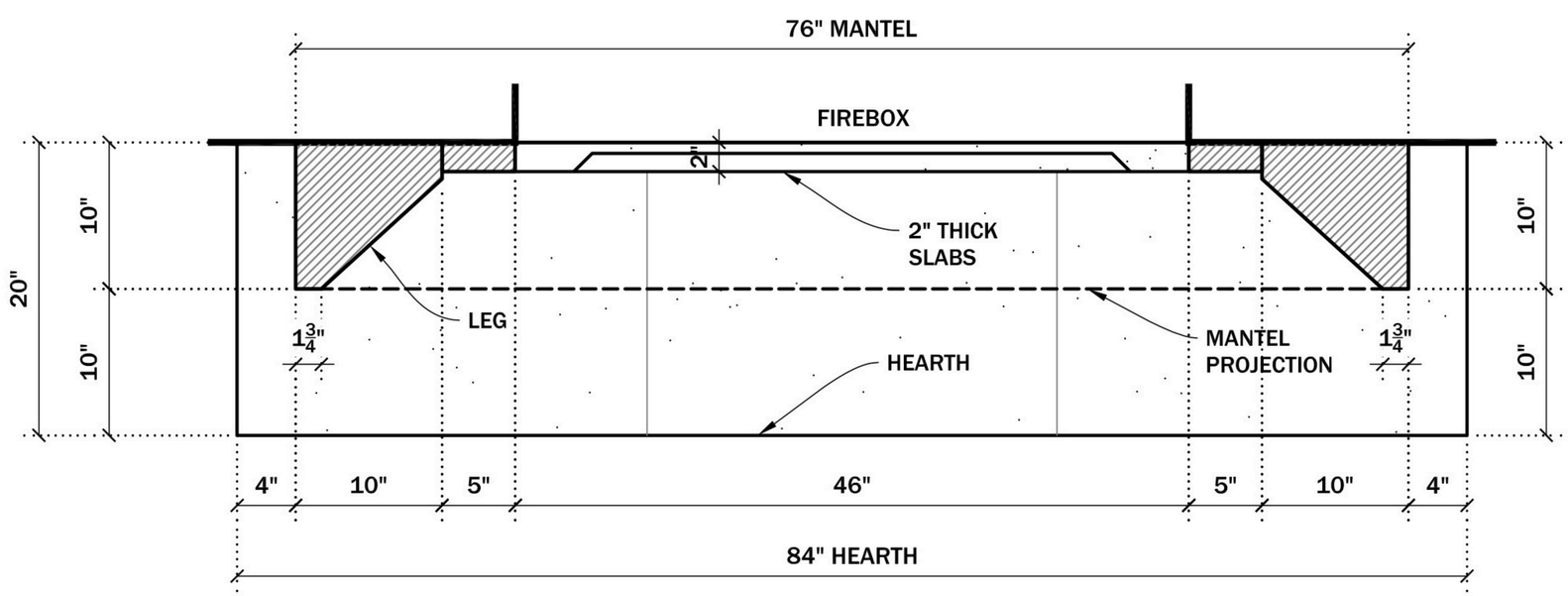


PLAN VIEW

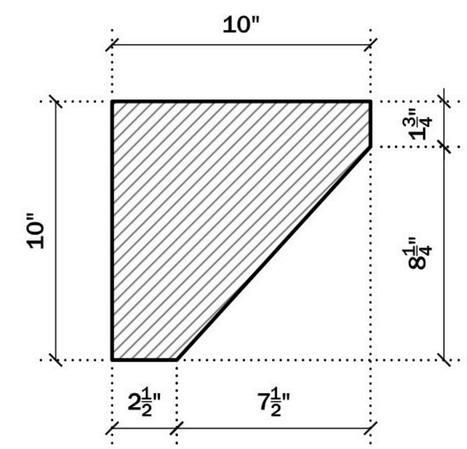


MANTEL & LEGS
PROFILE

WFR-Monaco

ARCHITECTURAL STONE ELEMENTS, LLC.

Scale: 3/4" = 1'-0"