ASSEMBLY INSTRUCTION FOR ACME FURNITURE

ITEM#: BD00663

DESCRIPTION: DRESSER

Thank you for purchasing this quality product. Be sure to check all packing materials carefully for small parts, which may have come loose inside the carton during shipment. Identify and count all parts and compare with the parts list below.

** Do not fully tighten screws until fully assembled **

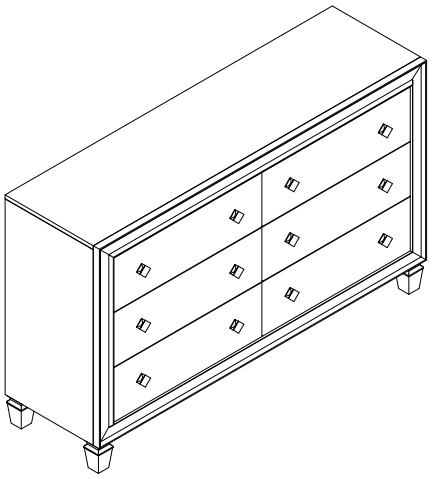

PARTS LIST:

1	2	3
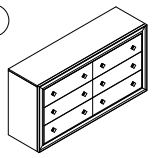		
DRESSER : 1PC	BUN FOOT: 4PCS	SUPPORT LEGS:1PC

HARDWARE LIST			
NO.	Drawing	Description	Q'ty
A		Furniture Tipping Restraint	1Set

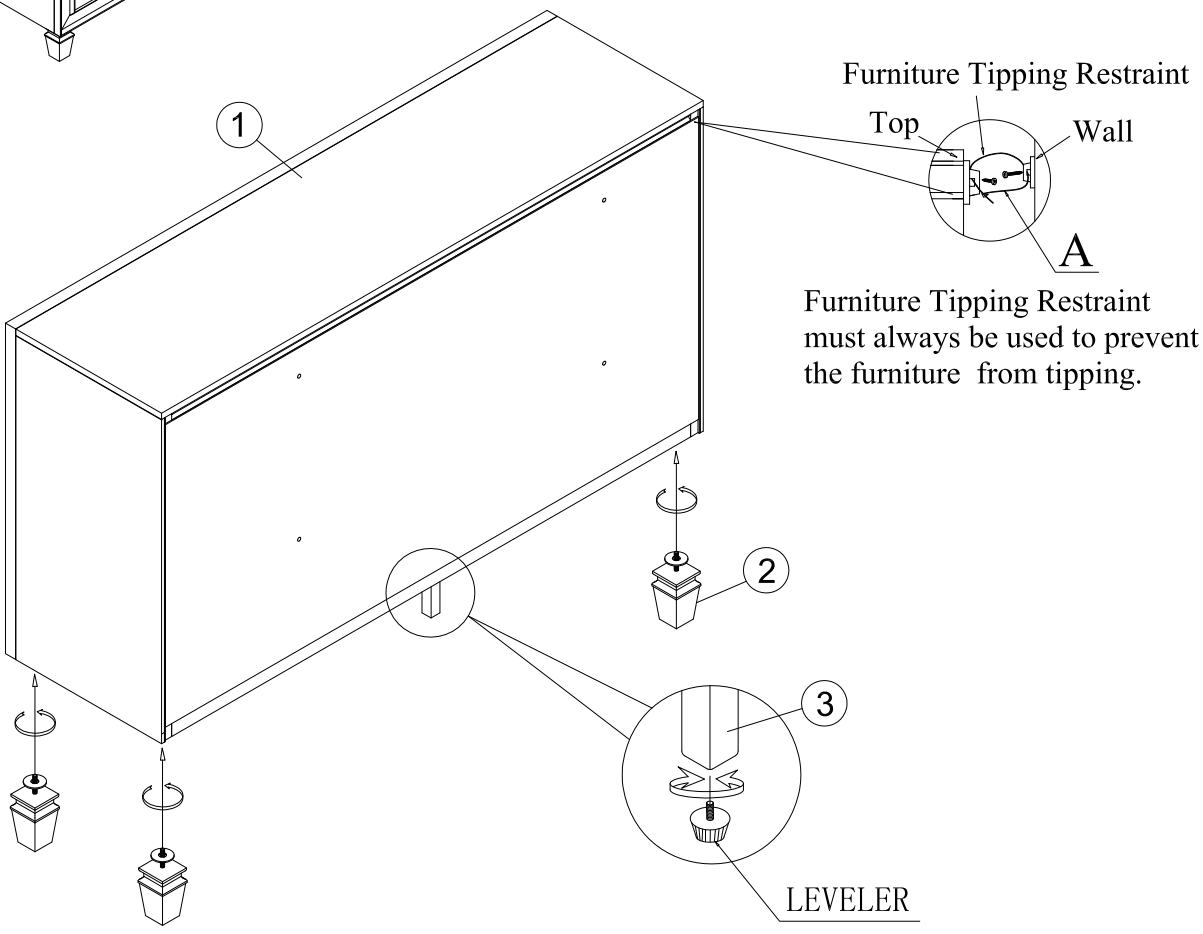

Furniture Tipping Restraint must always be used to prevent the furniture from tipping.

CLEANING INSTRUCTION

Clean the surface of the Dresser with furniture polish and a soft cloth.

Attention

*** Some number parts listed on the instruction sheet may not be in parts bag as they may be assembled. Carefully check parts and packing materials prior to ordering replacements.***

Made in Vietnam