PURPLE LEAF

est. 2013

11'×23'/11'×28'
PERGOLA

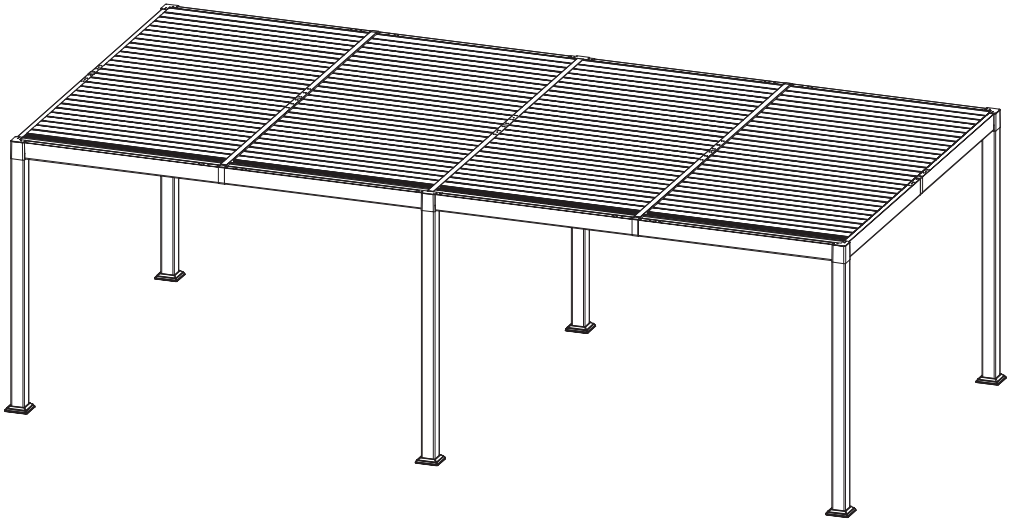

Assembly Manual

©Copyright 2013-2026 Purple Leaf Inc. All Rights Reserved

Warnings and Cautions

Please retain this instruction for future usage and read carefully before assembly.

Make sure you have all the parts & hardware as the item list shows.

***2 adults or more** are recommended to install your pergola.*

Do not discard any of the packaging until you have checked that you have all the parts and pack of fittings.

Check all bolts for tightness before use, and periodically check and tighten bolts to ensure your pergola works properly.

Some parts might have sharp edges/corners. Please follow basic safety precautions to reduce the risk of hurts.

Ladder is required for the installation.

Never fully tighten the screws until you finish the installation.

CHOKE HAZARD

THIS ITEM CONTAINS SMALL PARTS WHICH CAN BE SWALLOWED BY CHILDREN.
PLEASE KEEP IT AWAY FROM CHILDREN UNDER 3 YEARS OLD AND PETS DURING INSTALLATION.



To reduce personal injury and damage to your pergola, please open the louver roofs when it is in heavy wind or heavy snow.

Parts List

Part No.	Image	Description	QTY	Part No.	Image	Description	QTY
A		Post	4	F		Side Beam	1
A2		Post	2	F1		Side Beam	1
B		Side Beam with Louver Bracket	1	F3		Side Beam	1
B1		Side Beam with Louver Bracket	1	F4		Side Beam	1
C		Side Beam with Louver Bracket	1	G		Louver Blade	4
C1		Side Beam with Louver Bracket	1	H		Louver Blade	116
D		Middle Beam	2	I-1		Control Loop Connecting Piece	4
D1		Middle Beam	3	J		Louver Crank Handle	2
D3		Middle Beam	1	K	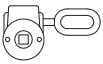	Louver Control Loop	4
E		Side Beam	1	K1		Control Loop Connecting Piece	4
E1		Side Beam	1	L		Adhesive Tape (210MM)	3
E3		Side Beam	1	L1		Adhesive Tape (294MM)	6
E4		Side Beam	1	L2		Center sill connector	3

Parts List

Part No.	Image	Description	QTY	Part No.	Image	Description	QTY
L3		Center sill connector	4	1#		Hex Bolt (M6x15)	104+5
L4		Center sill connector	2	2#		Bolt (M8x53)	32
N		Center sill fixing block	6	3#		Bolt (M4x12)	8
N1		Beam Corner Cap	4	4#		Hex Bolt (M6x15)	28
N2	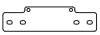	Beam Corner Cap	2	5#		Nut Bolt (M6)	8
N3		Beam Corner Cap	2	6#		Hex Bolt (M6x55)	8
O		Post Base	6	7#		Hex Bolt (M6x10)	196+5
O1		Post Base Cover	6	8#	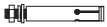	Expansion Bolt (M8x50)	24
P		Transmission rod connecting piece	8	9#		Expansion Bolt (M10x137)	12
Q	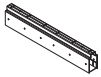	Beam connector	3	10#		Expansion Bolt (M10x116)	6
Q1		Beam connector	6			Allen Key (6mm)	1
Z		Glue	1		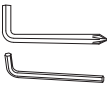	Allen Key (4mm)	1 1

Before Assembly

Please be aware that assembly of the pergola is a complicated and involved process requiring a certain amount of technical ability and time. If you are in any doubt about assembly it is recommended you enlist the help of a qualified tradesperson.

It is recommended that assembly should be conducted by a minimum of 2-3 people. Certain stages of the assembly will require the use of multiple step ladders and, if securing into concrete or other solid ground you will require a masonry drill.

It is important that you carefully measure and mark out the location of the Pergola posts.
The Pergola must be located on flat, level ground and the posts positioned equally apart.
Failure to do the above may result in sub-optimum operation of the mesh sidewalls.

MOUNTING BLUEPRINT

Pergola 11'×23'

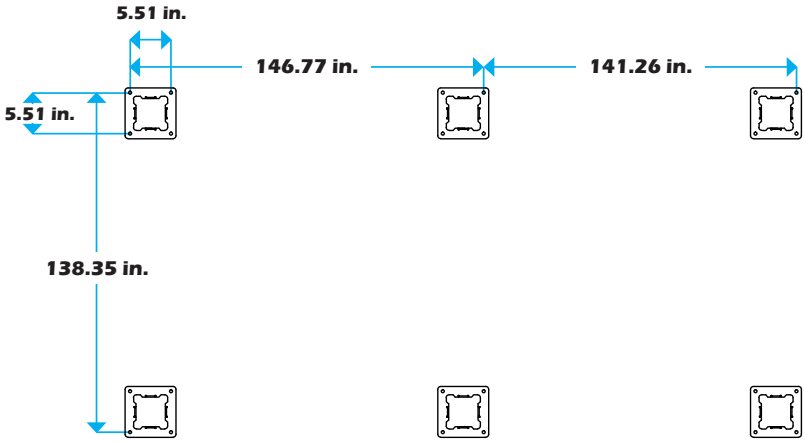

Pergola 11'×28'

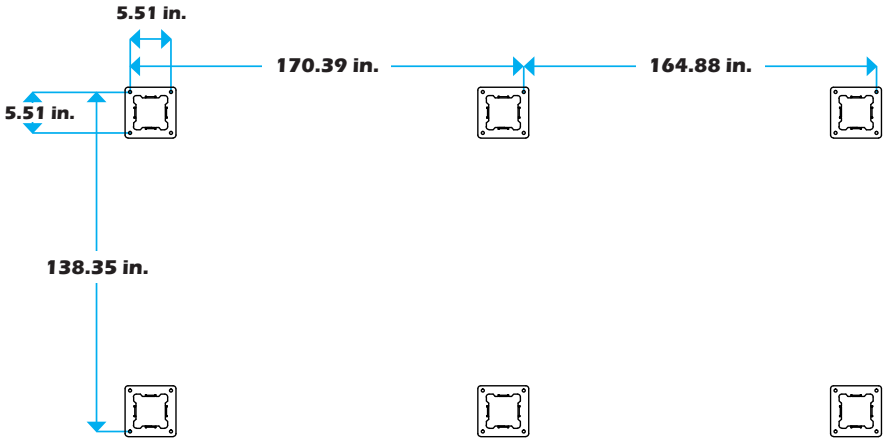

Attention: The above dimensions are manually measured and error is within 1-2 inches. We suggest you anchor the pergola after installed the whole product.

Top View

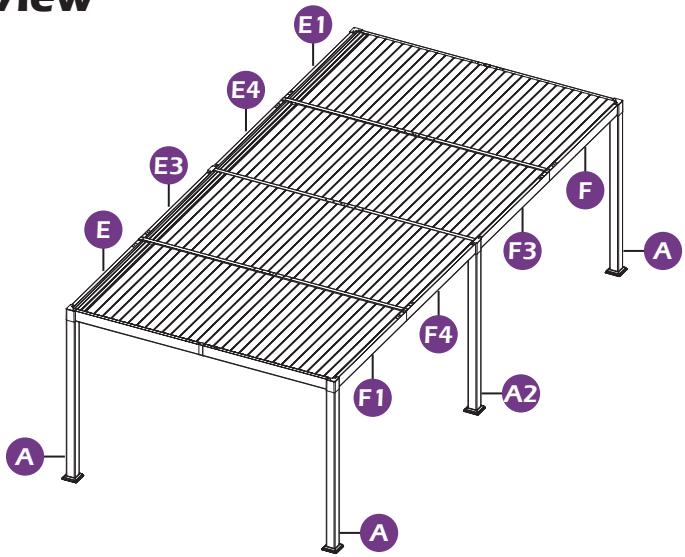

Posts are labelled with lettered stickers“A“ and “A2“.

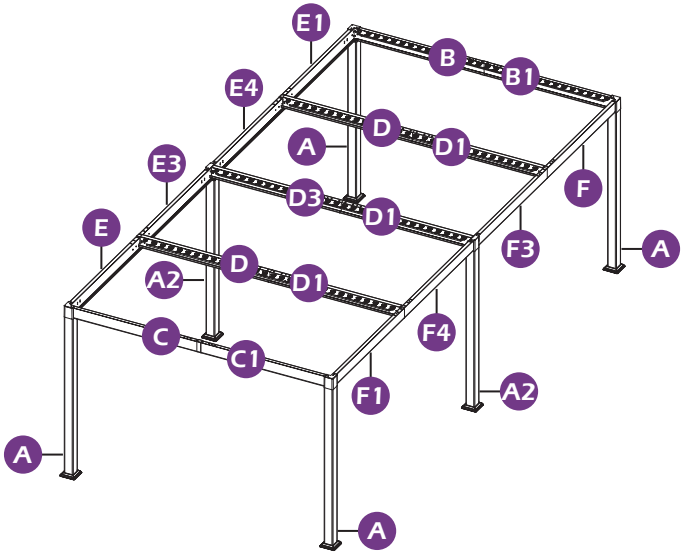

Beams are labelled with lettered stickers“B, “B1 , “C, “C1, “D, “D1, “D3, “E, “E1, “E3, “E4, “F , “F1, “F3 and “F4.

Framework Assembly

A X4

A2 X2

O X6

O1 X6

1# X24
(M6x15)

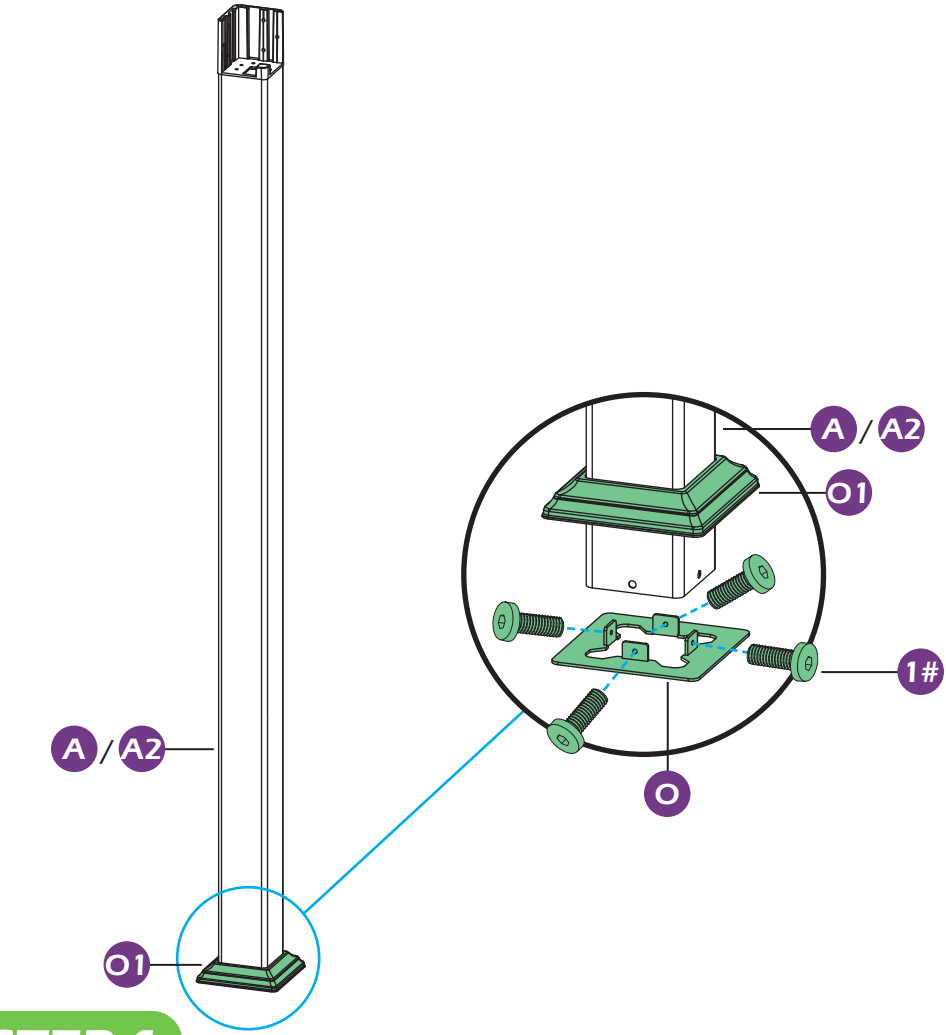

STEP 1

Edge beam steps

B X1

Q1 X1

P X1

B1 X1

7# X20
(M6x10)

9# X2
(M10x137)

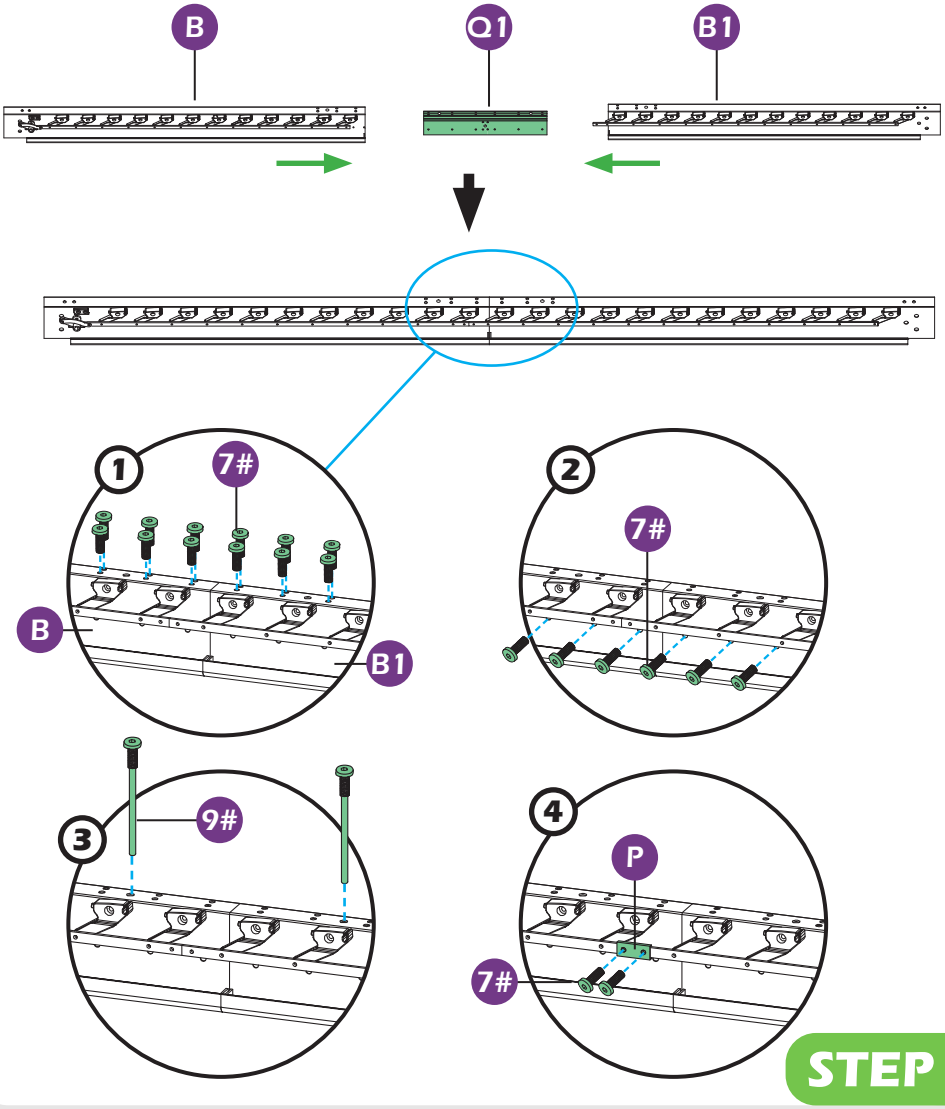

STEP 2

Edge beam steps

C X1

Q1 X1

P X1

C1 X1

7# X20
(M6x10)

9# X2
(M10x137)

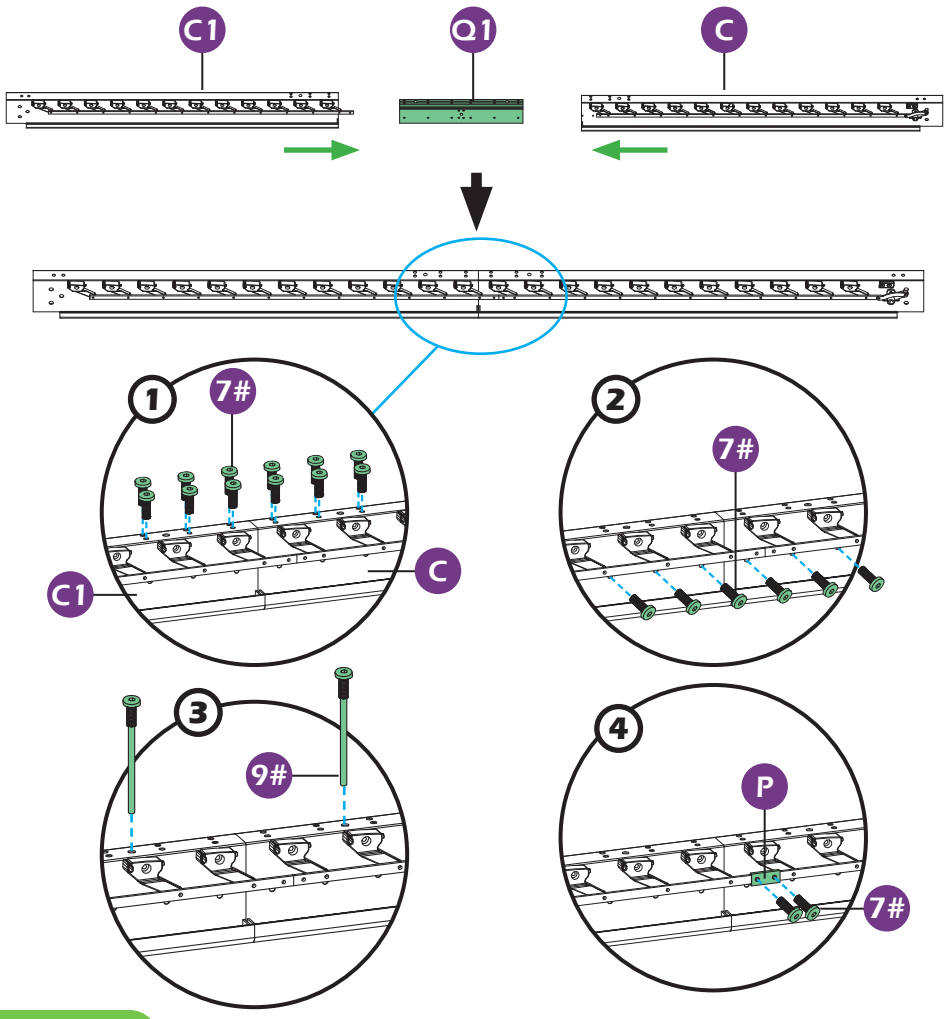

STEP 2

Cross beam steps

E X1

E3 X1

N X1

Q1 X1

4# X4
(M6x15)

7# X18
(M6x10)

9# X2
(M10x137)

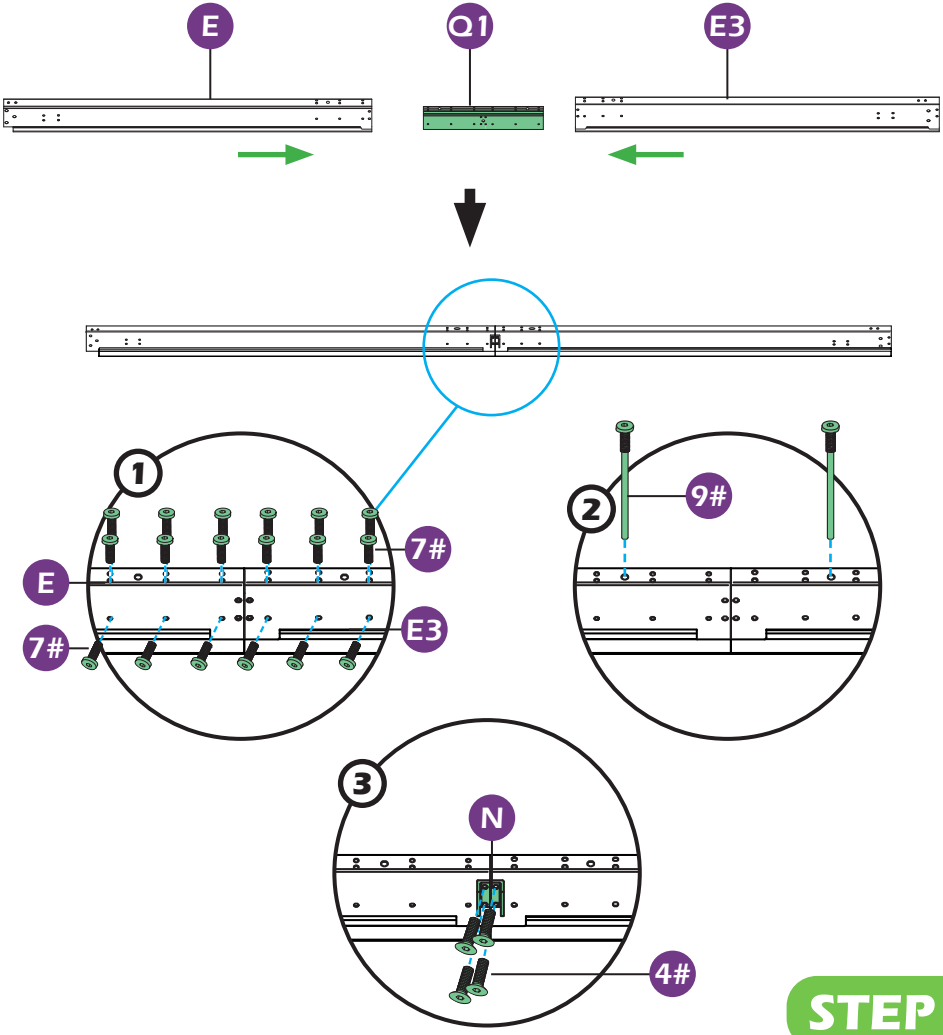

STEP 3

Cross beam steps

E1 X1

E4 X1

N X1

Q1 X1

4# X4
(M6x15)

7# X18
(M6x10)

9# X2
(M10x137)

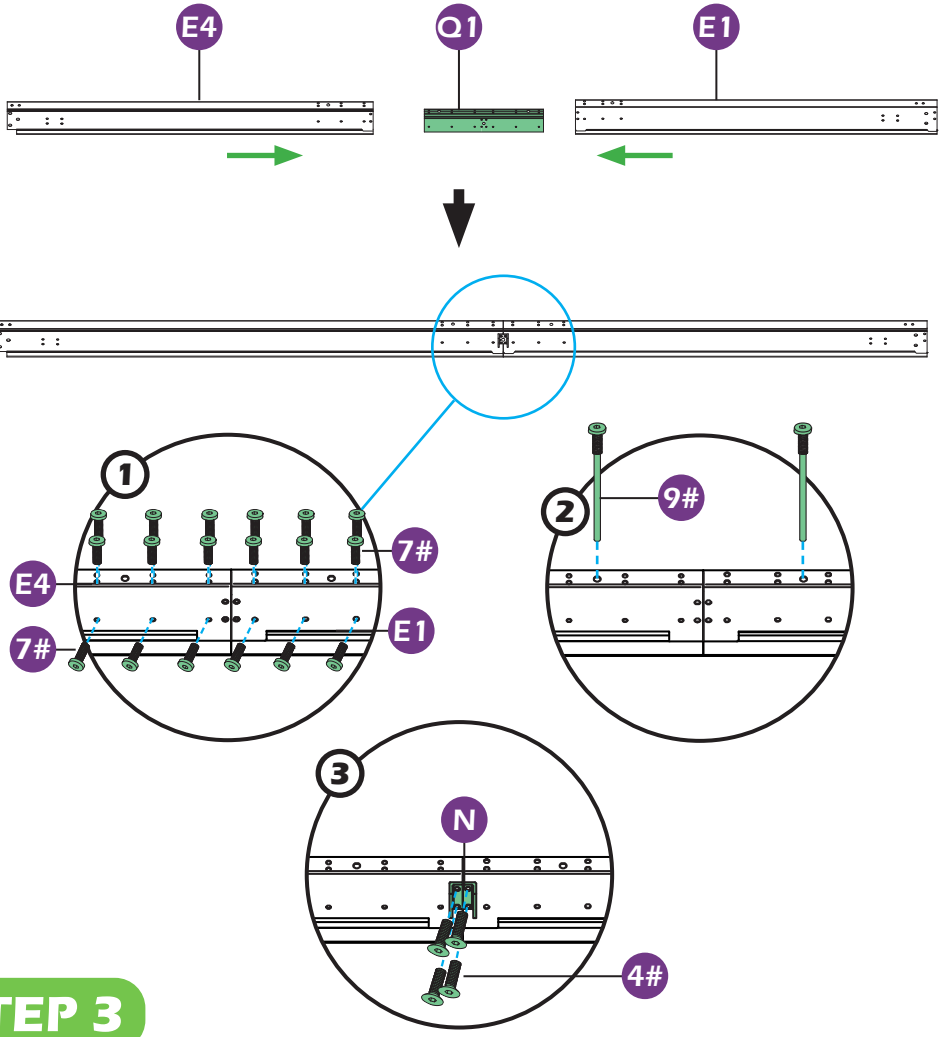

STEP 3

Cross beam steps



F X1



F3 X1



N X1



Q1 X1



4# X4
(M6x15)



7# X18
(M6x10)



9# X2
(M10x137)



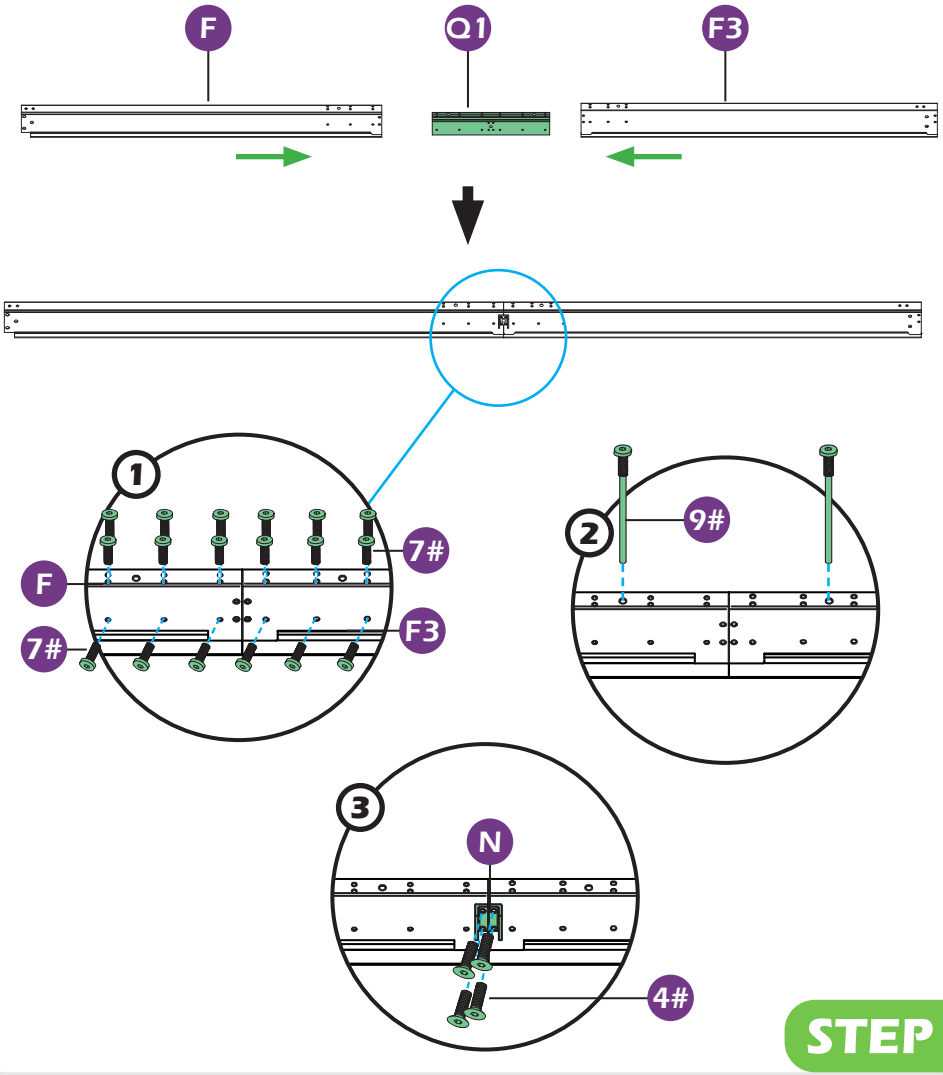

STEP 3

Cross beam steps

F1 X1

F4 X1

N X1

Q1 X1

4# X4
(M6x15)

7# X18
(M6x10)

9# X2
(M10x137)

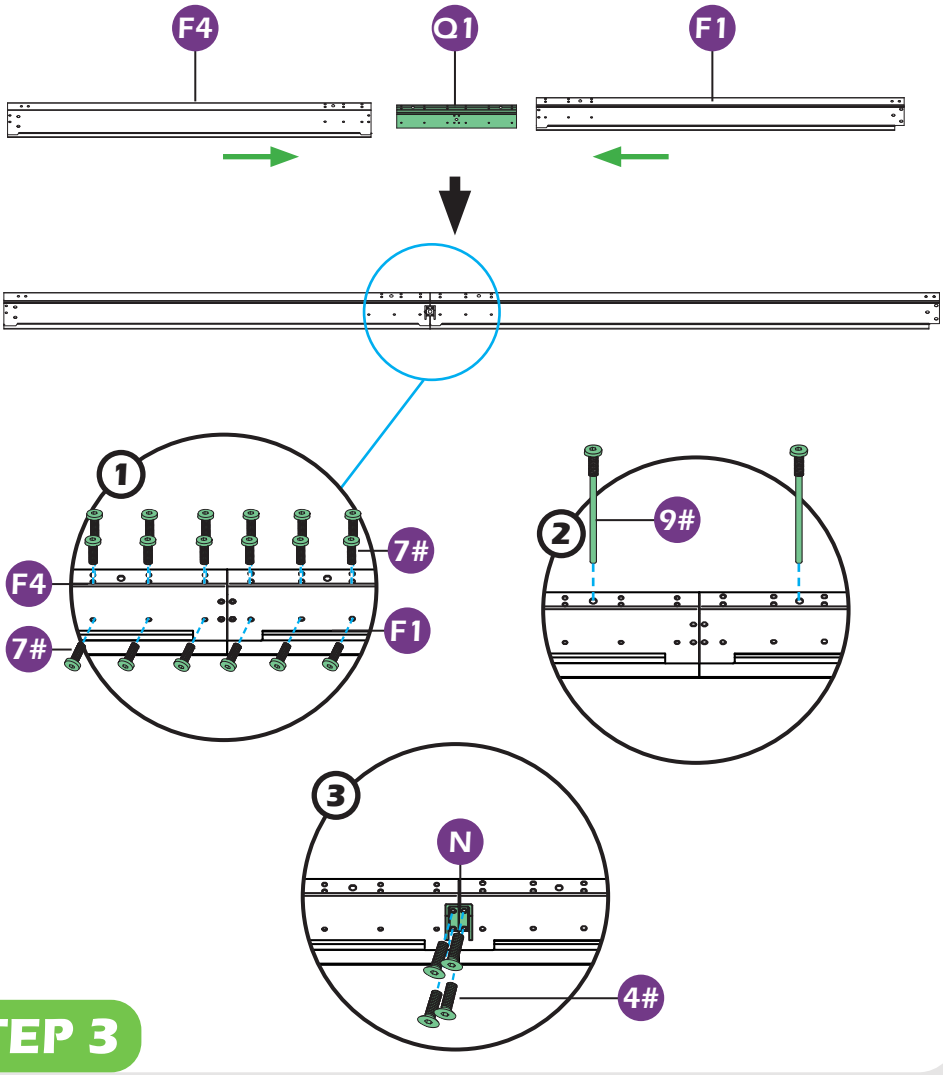

STEP 3

Center Beam Procedure

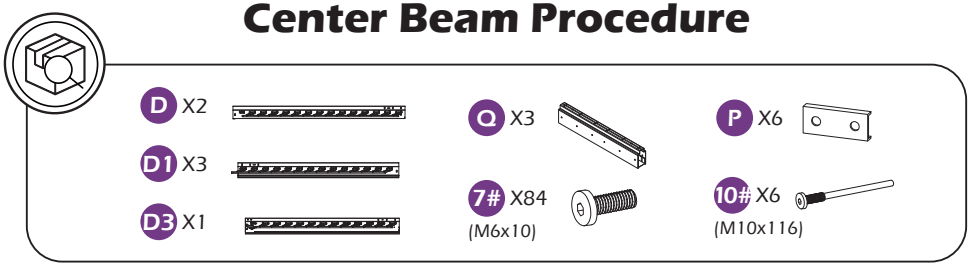

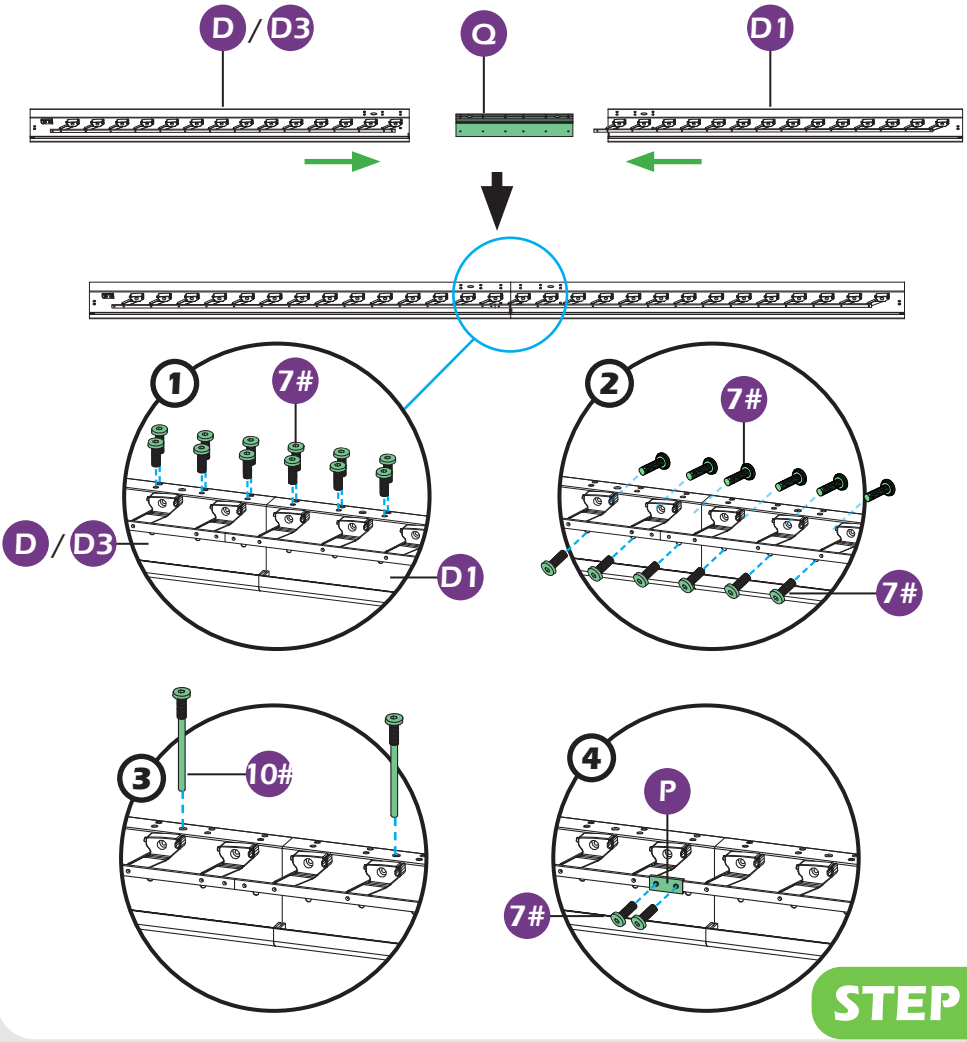

STEP 4

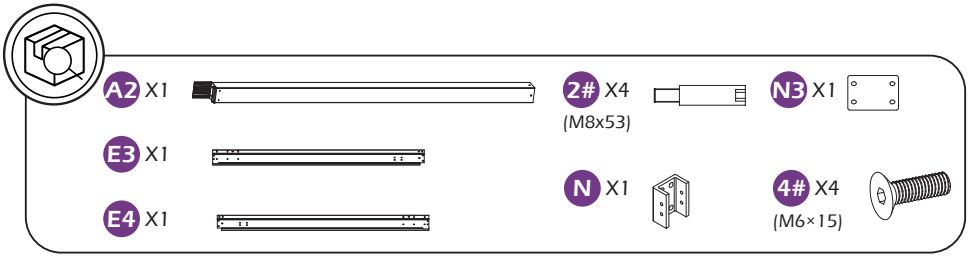

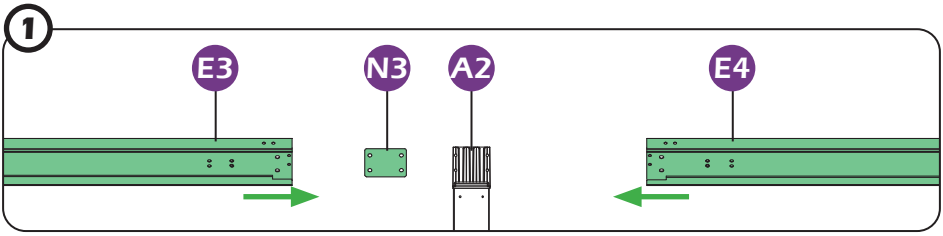

Insert part N3 between beams E3 and E4, then secure the assembly to post A2 using screw 2#.

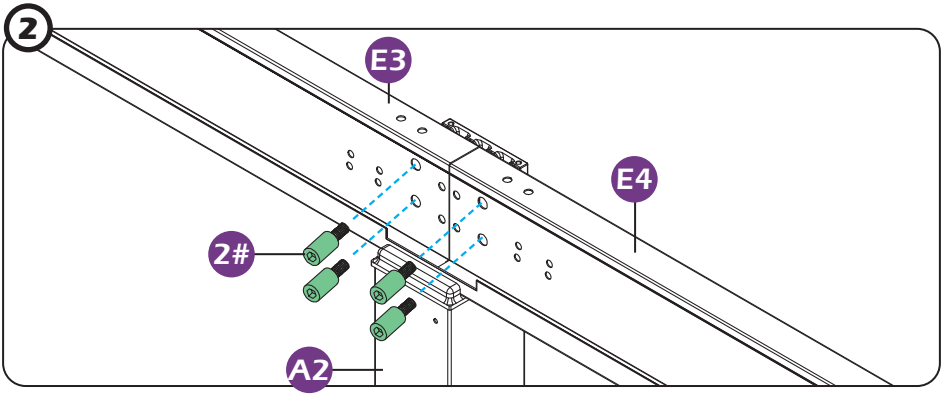

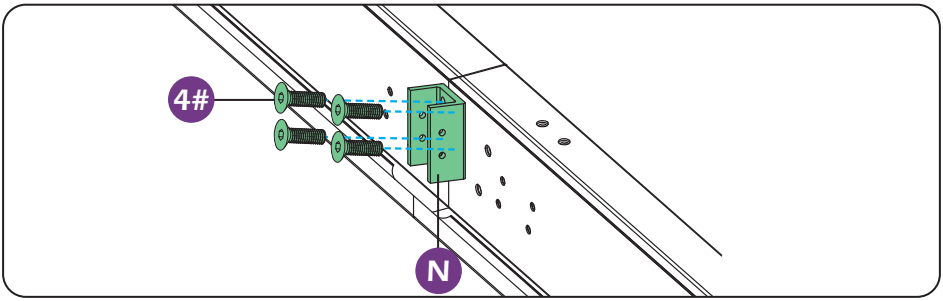

STEP 5

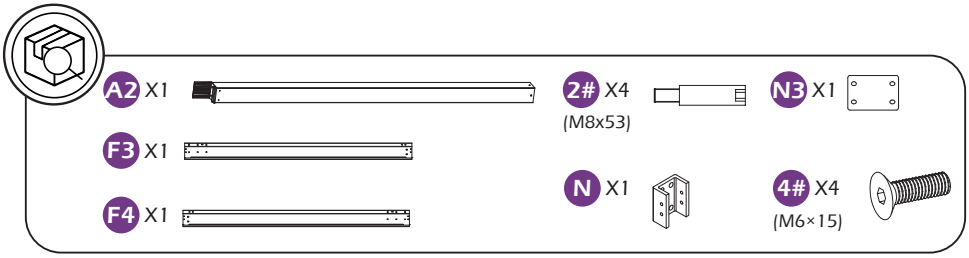

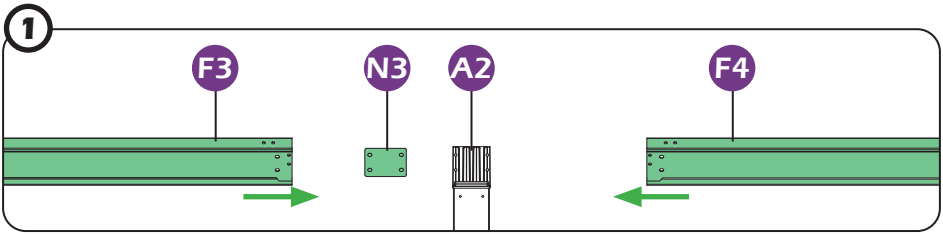

Insert part N3 between beams F3 and F4, then secure the assembly to post A2 using screw 2#.

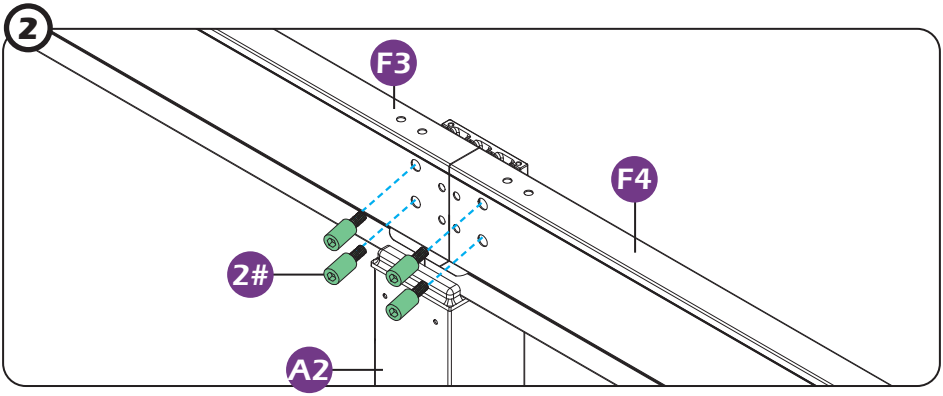

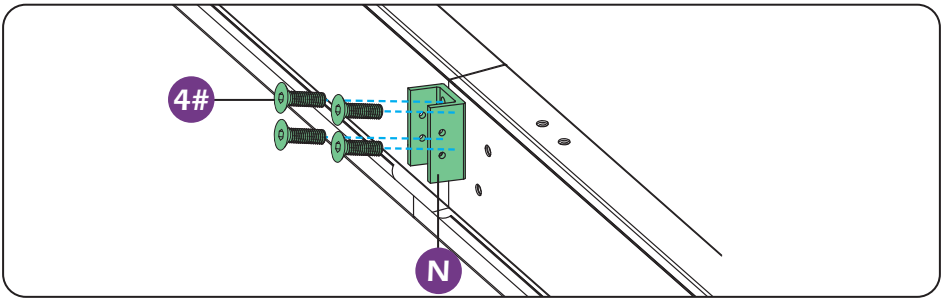

STEP 5

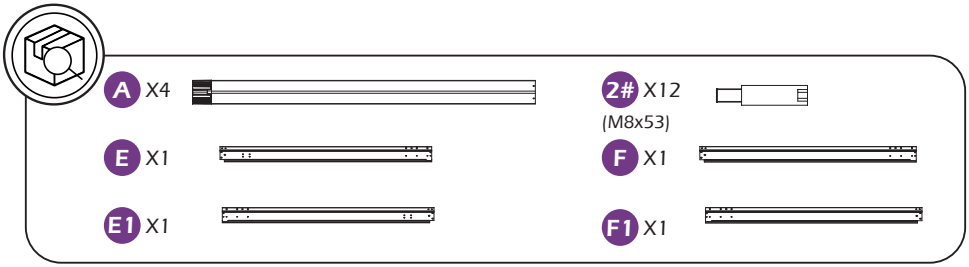

Assemble the side beams E , E3 , E4 , E1 , F , F3 , F4 , F1 to the posts A with screw 2# .

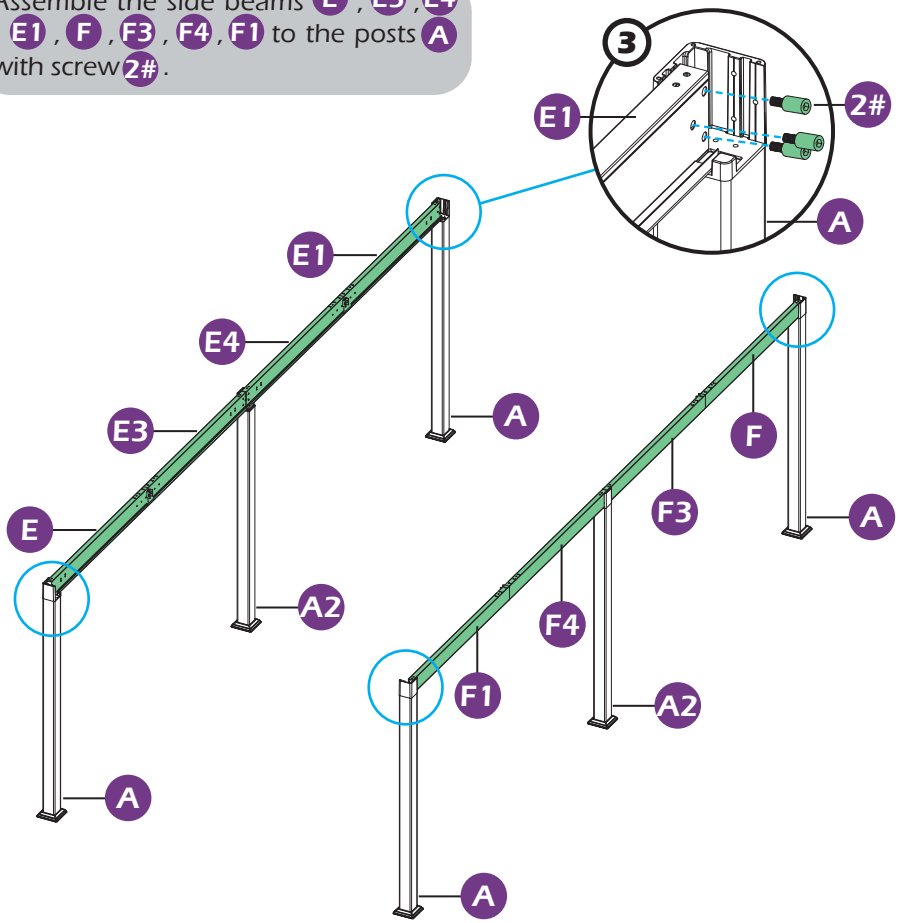

STEP 6

B X1

C X1

2# X12
(M8x53)

B1 X1

C1 X1

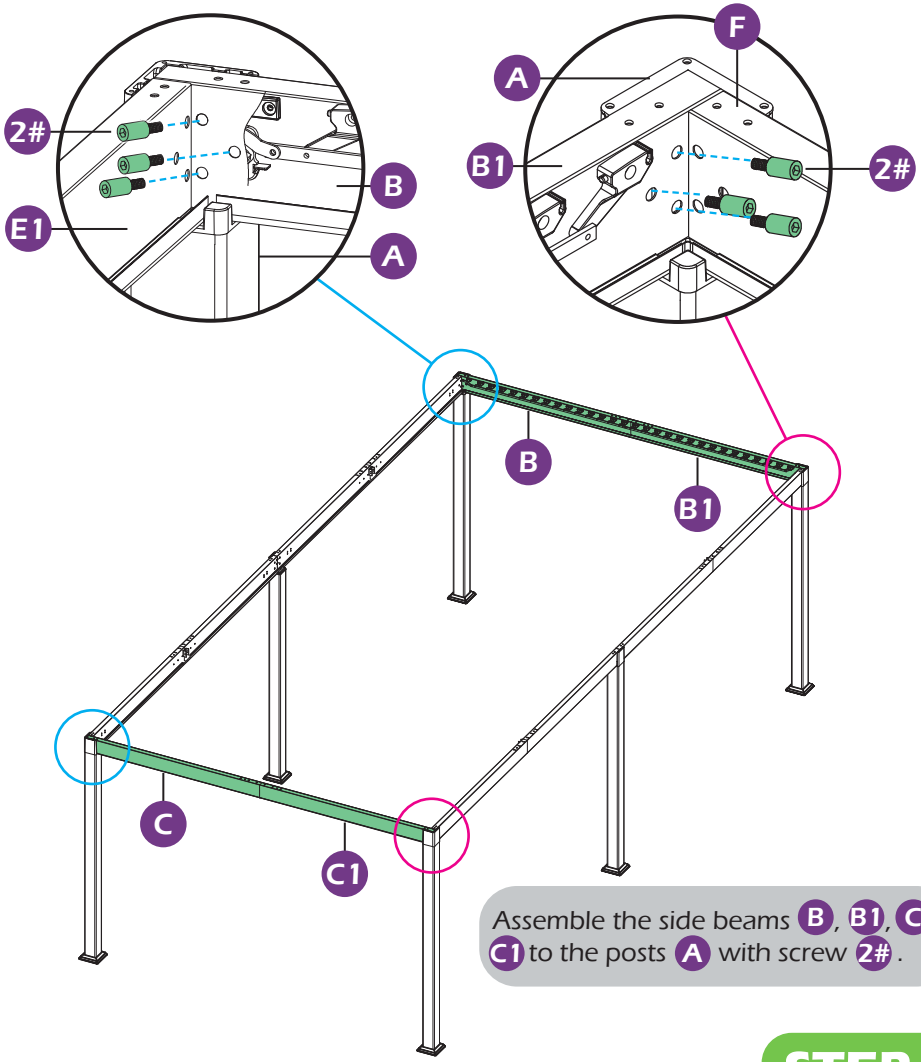

Assemble the side beams B, B1, C, C1 to the posts A with screw 2#.

STEP 6

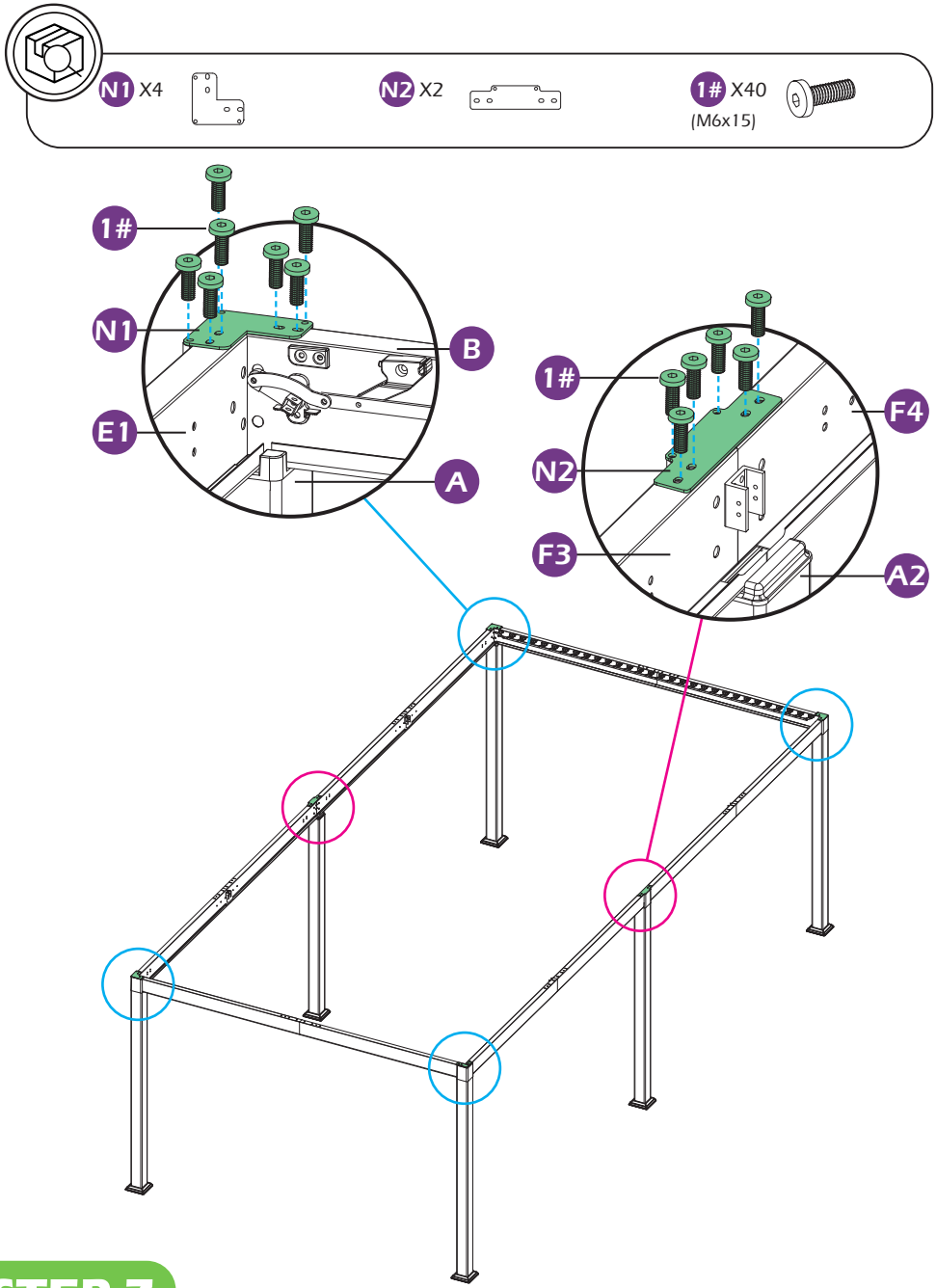

STEP 7

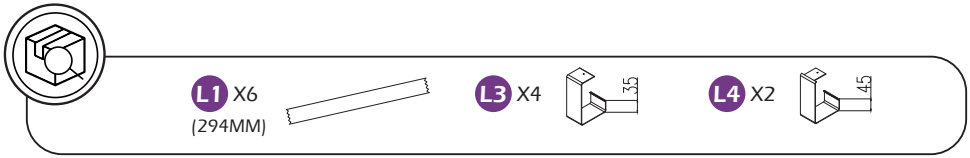
L1 X6
(294MM)
L3 X4
35
L4 X2
45

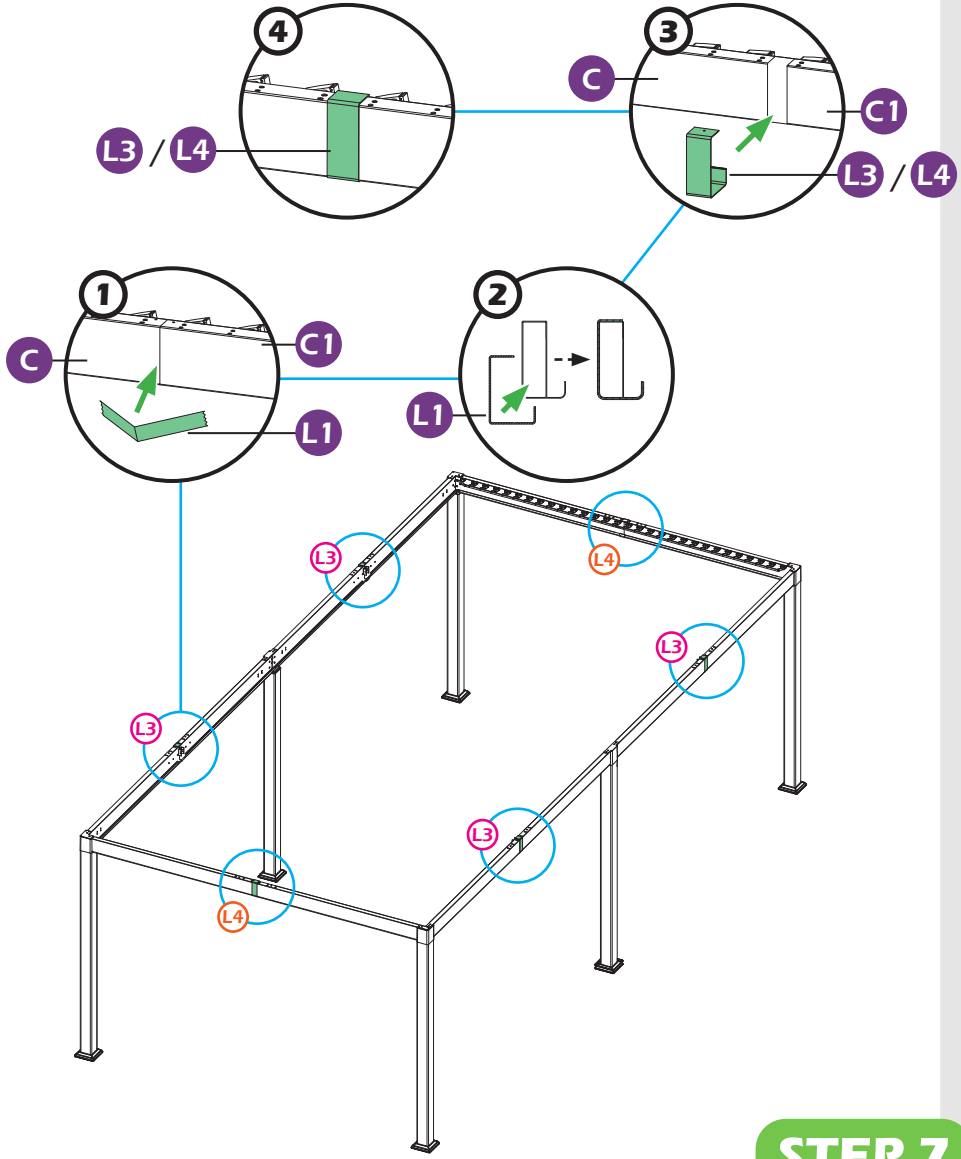
4
L3 / L4
3
C
C1
L3 / L4
1
C
C1
L1
2
L1
L3
L4
L3
L3
L3
L4

STEP 7

D X2

D3 X1

1# X24
(M6x15)

D1 X3

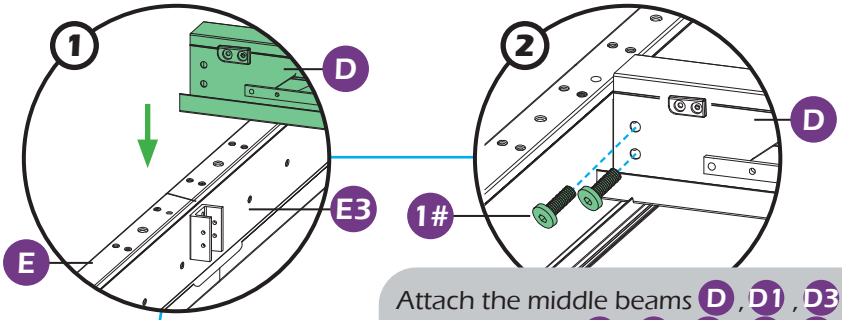

Attach the middle beams D , D1 , D3 , to the side beams E , E3 , E4 , E1 , F , F3, F4 , F1 with screw 1#.

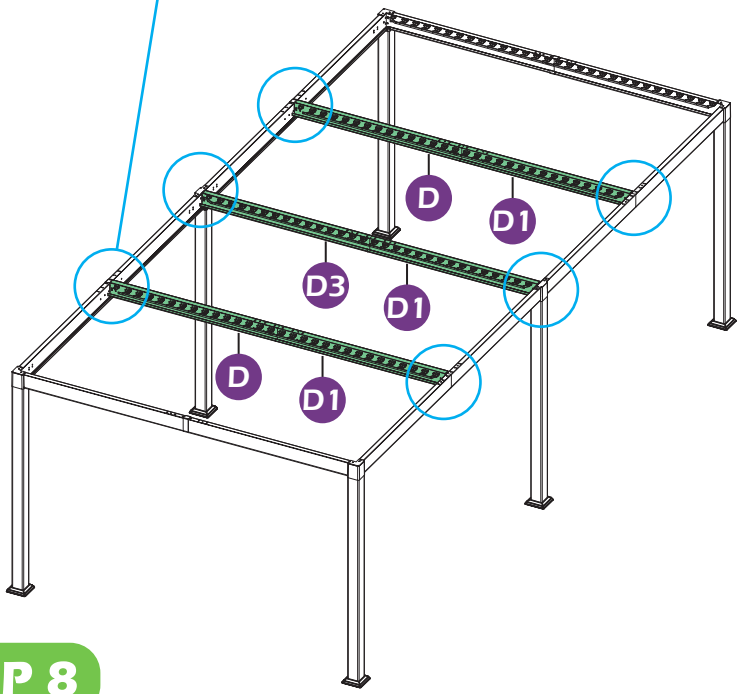

STEP 8



L X3
(210MM)



L2 X3



Z X1



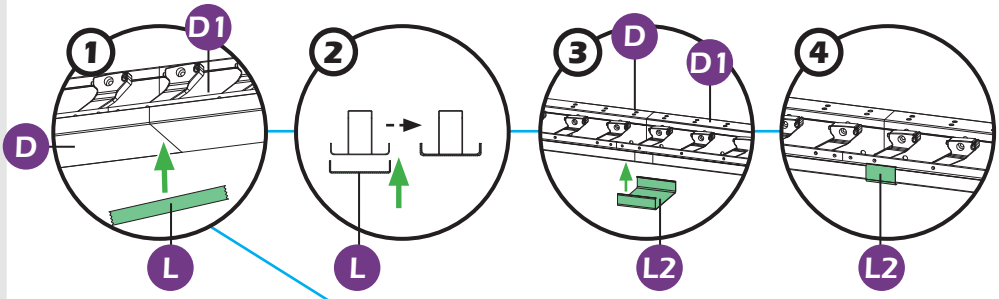

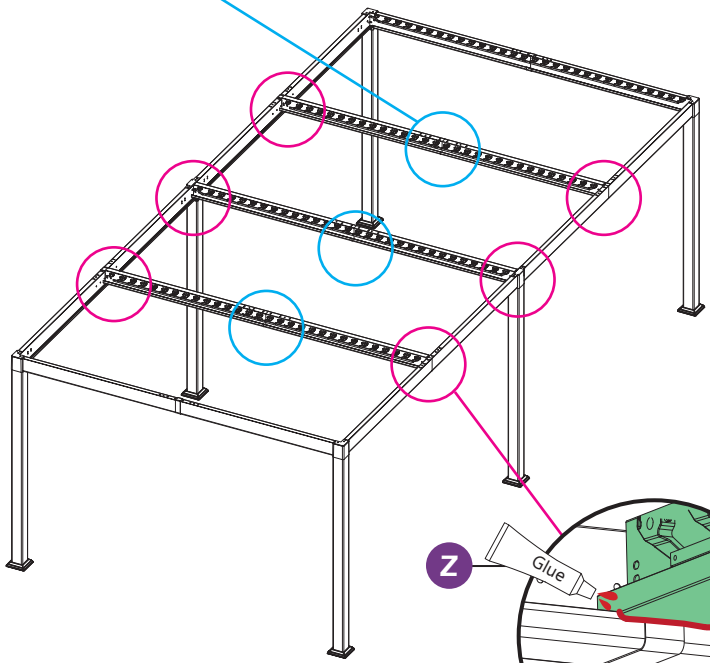

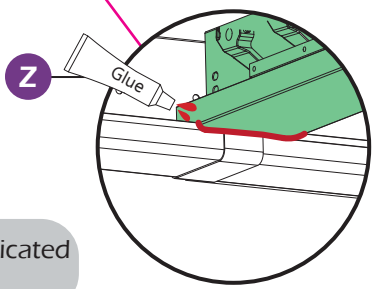

Apply waterproof adhesive Z to the indicated area to prevent water leakage.

STEP 8

K X4

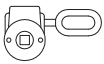

5# X8 (M6)



I-1 X4



K1 X4



6# X8 (M6x55)



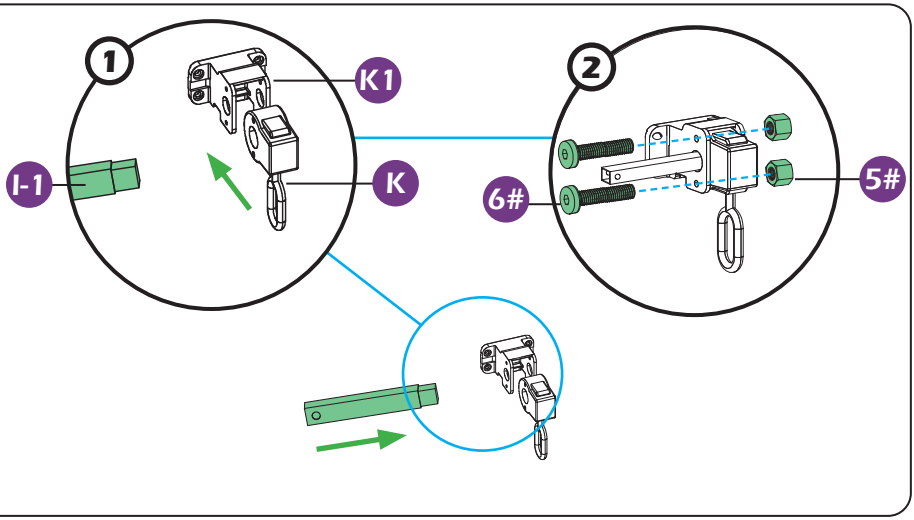

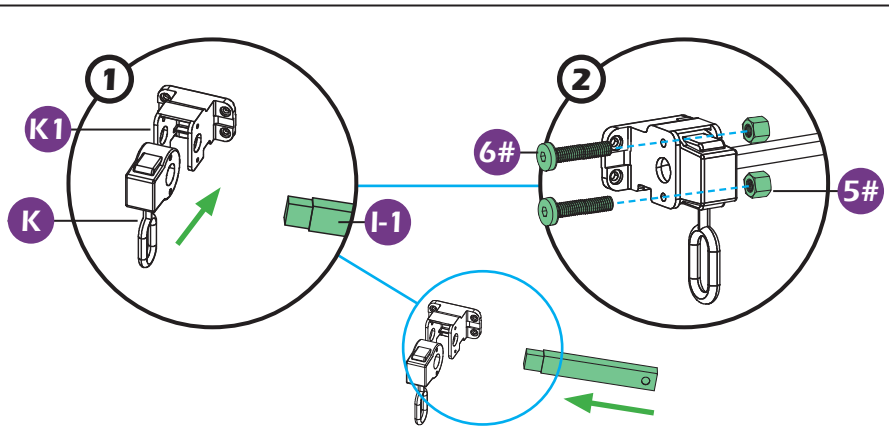

Please put I-1 through K and attach to K1 with screw 6# and nut 5# to make them a total four control loop connecting parts.

STEP 9

1# X16
(M6x15)

4# X4
(M6×15)

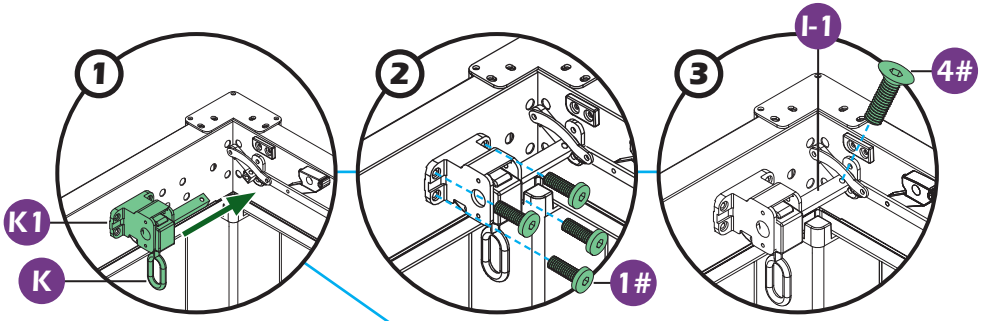

Attach the part with I-1 , K and K1 which a total four control loop connecting parts to the side beams E , E3 , E4 and E1 with screw 1# and 4#.

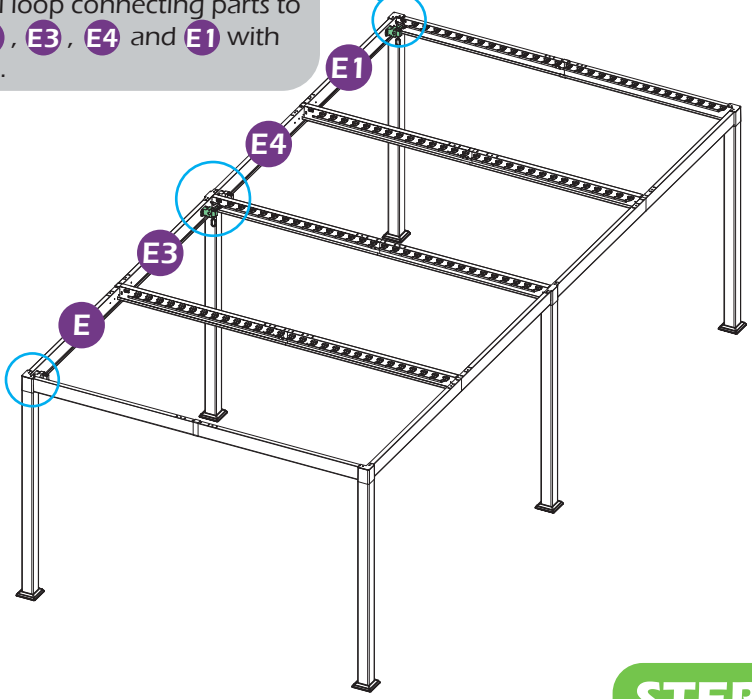

STEP 9

H X116

J X2

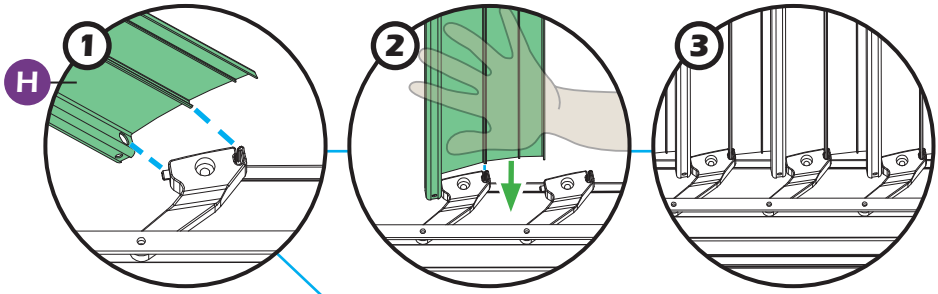

Clamp both ends of the Louver Blade into the Brackets located on the beams.

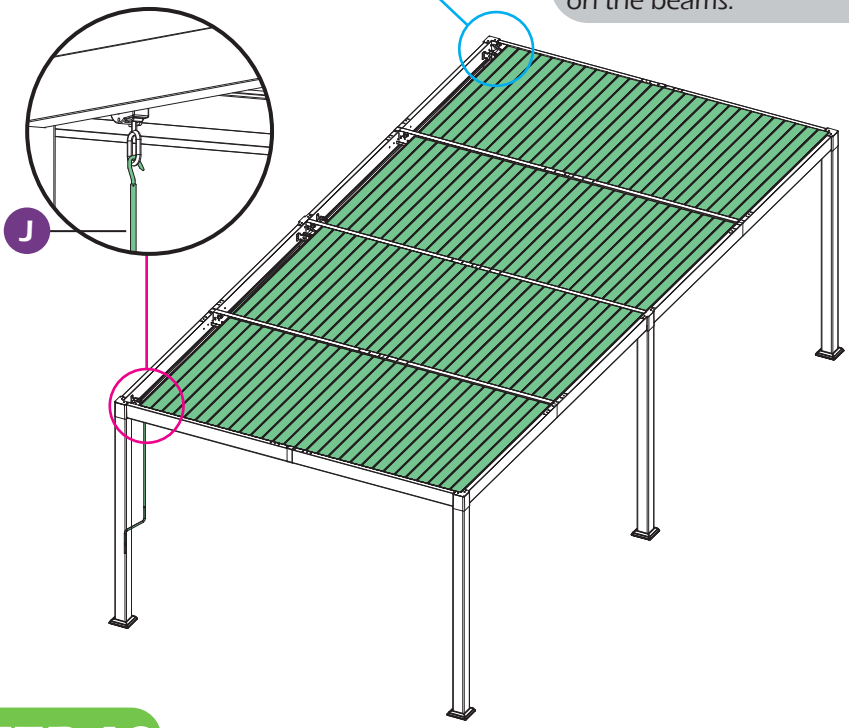

STEP 10

G X4

3# X8
(M4×12)

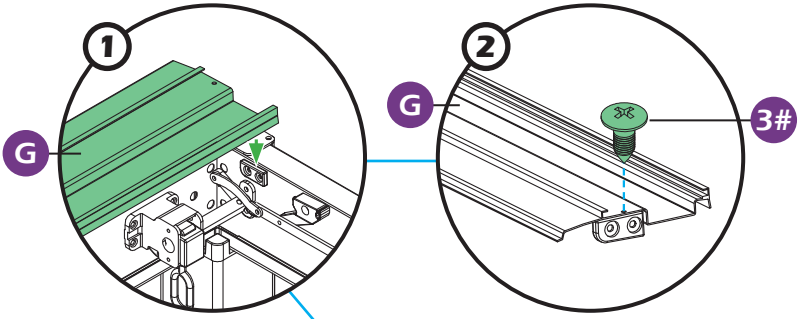

The plastic bracket without screw hole need to be drilled with screw 3# through part G to the bracket.

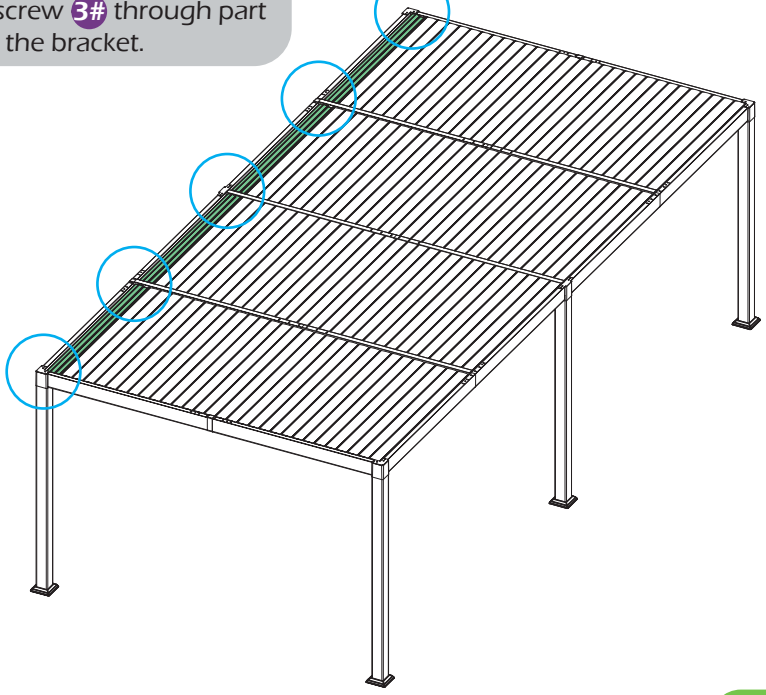

STEP 11

Usage instructions: Louvered roof

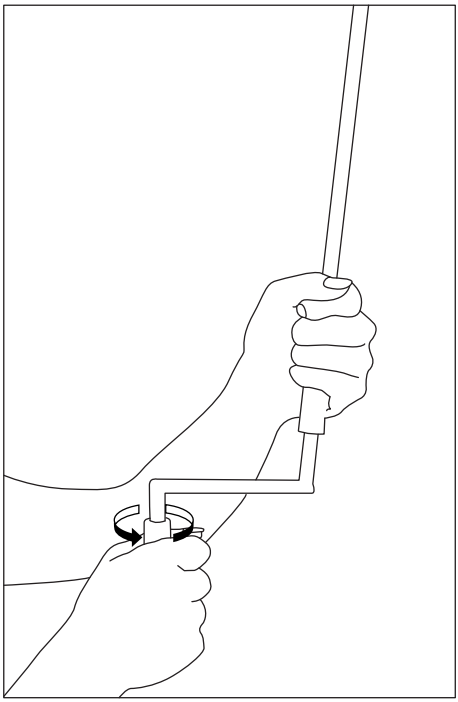

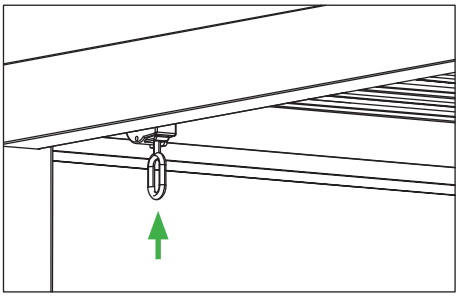

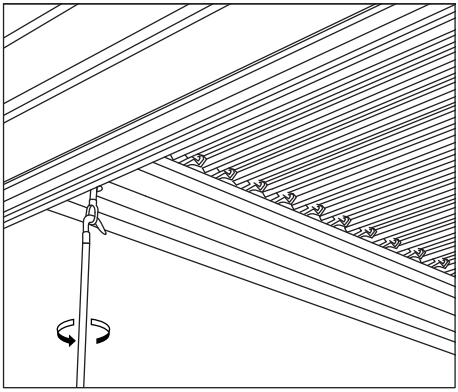

Locate the Louver control loops, insert Crank Handle and turn anti clockwise to open and clockwise to close.

STEP 11

Securing your Pergola

01

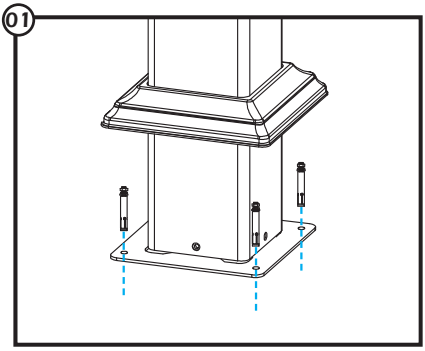



8# X24

(M8x50)

Securing into Concrete

When securing your pergola into solid ground such as concrete or paved area, please use the expansion bolts 8# (Use a drill bit with a diameter of 10mm).

02

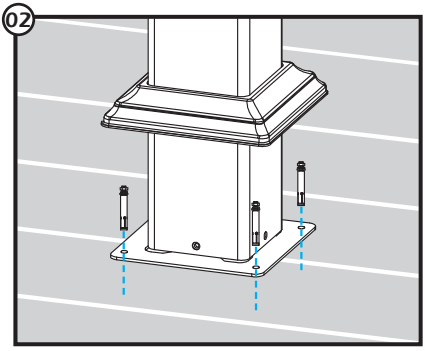

Attention: Wood screws are not in packing list. You have to purchase it based on the specification of your decking wood.

Securing into Wood

When securing your pergola into a wooden surface such as decking, please use suitable wood screws with a diameter of 10mm and a length which suitable for your decking wood thickness.

STEP 12

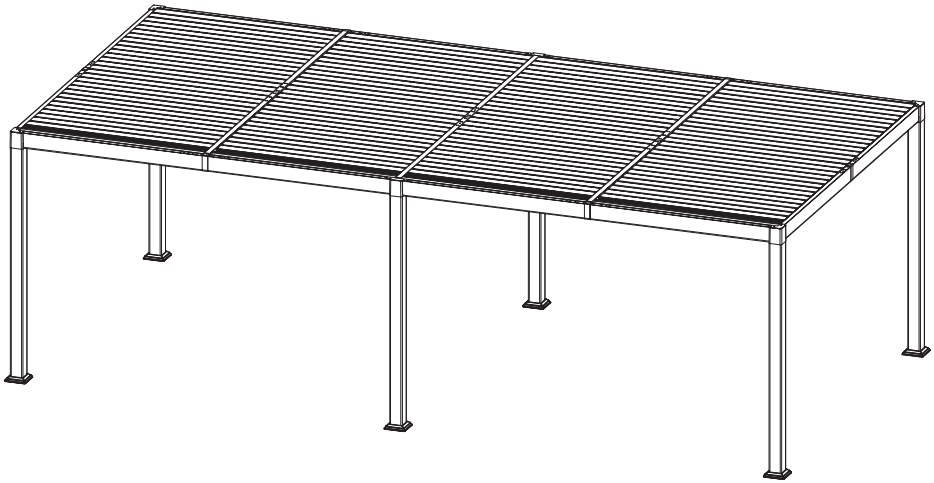

Warranty

Frames

Frames constructions are warranted to be free from defects in material and workmanship for 1 year from item purchased. Damage to frame from negligence won't be covered by this warranty.

Bolts & Nuts

Bolts and nuts are warranted to be free from defects in material and workmanship for 1 year from item purchased. Damage from exposure to chemicals (including not only oils, spills, fluids) won't be covered by this warranty.

Warranty Limitation

This warranty is for the original purchase order only. (Order number required). This warranty is non-transferable. Purple Leaf is responsible for the free replacement part including shipping charges for the 1 year warranty.

Warranty Exclusion

This warranty does not cover products subject to negligence, abuse usage, inappropriate installation. Purple Leaf reserves the right to explain warranty exclusions. When the replacement item is applied, the 1 year warranty automatically expires. Please feel free to contact us to apply for a warranty.

Care and Cleaning

Wash frame parts with mild soap and water, rinse thoroughly. Dry frame completely.
Do not use bleach, acid, or other solvents on the frame parts.
Please inspect and tighten all bolts or fasteners on a regular basis to ensure proper performance and safety of your pergola.
Regularly check the drain outlet for any blockages.

Purple Leaf Inc.
15950 Boyle Avenue, Fontana
CA, 92337, US
pergola2@purpleleafgarden.com
©Copyright 2013-2026 Purple Leaf Inc.
All Rights Reserved.V.2