Assembly Instructions

CAUTION: You must read these Assembly Instructions before you proceed.

Care & Maintenance



- Not for commercial use. For residential use only.



- Do not put hot items directly on furniture surface.



- Do not clean furniture with harsh cleansers or polish.



- To obtain the longest lifespan of your outdoor product minimizing exposure to direct sunlight is recommended.



- Children should not climb or jump on the furniture.



- Do not write on furniture without a padded barrier to protect the surface.



- To obtain the longest lifespan of your outdoor products, avoid extended and lengthy exposure to rain, snow, and direct sunshine. Whenever possible cover the product and /or place under patio or awnings.



- Stains may be removed with mild soap solution and damp cloth.



- Keep away from sources of ignition.



- Dust and pick-up spills using a clean, non-colored, lint- free cloth.

Please look in the Seat Panel for hardware packs.

CLUB CHAIR

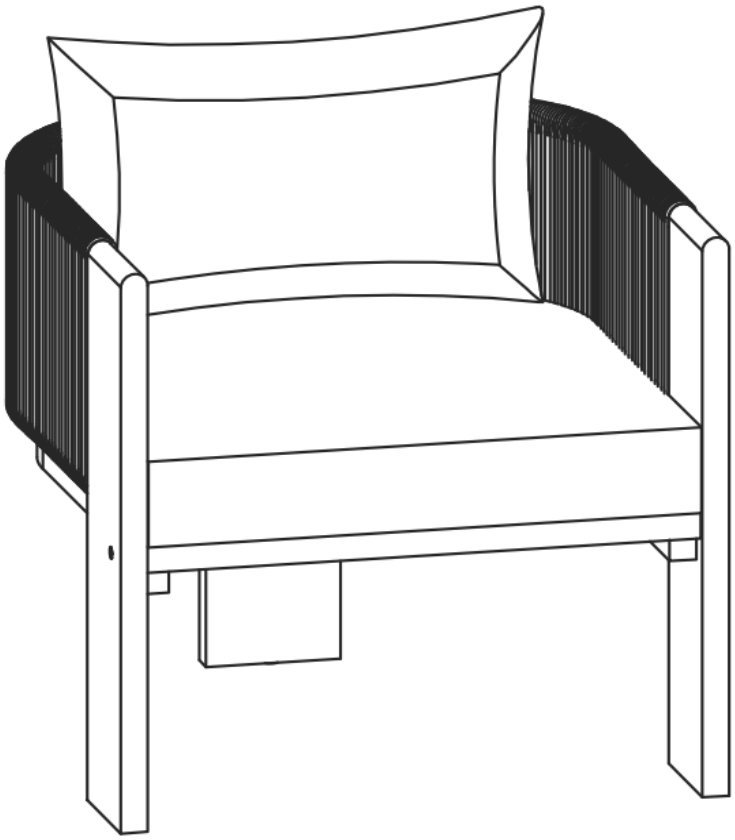

Parts List:

Label	Picture	Description	QTY
A	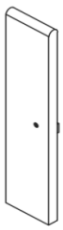	Left Leg	1
B	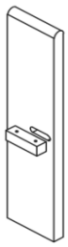	Right Leg	1
C	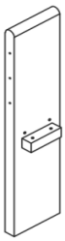	Back Leg	1
D	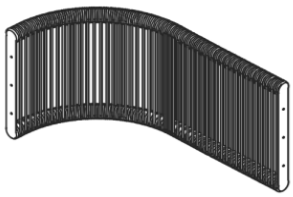	Backrest Panel	2
E	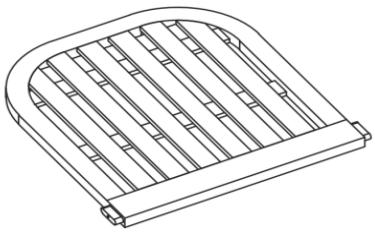	Seat Panel	1
F	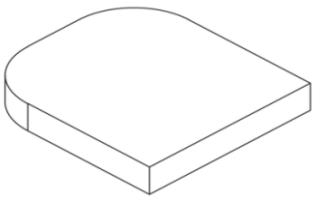	Seat Cushion	1
G	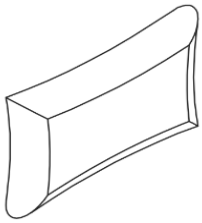	Back Cushion	1

Hardware:

No	Picture	Description	QTY
①	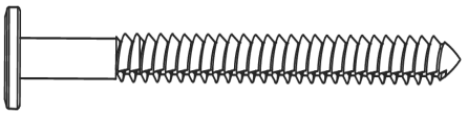	Screw (M6*60mm)	5
②	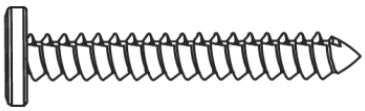	Screw (M6*45mm)	7
③		Screw (M6*25mm)	13
④		Allen Wrench	2

Assembly Preparation:

Before Beginning Assembly:

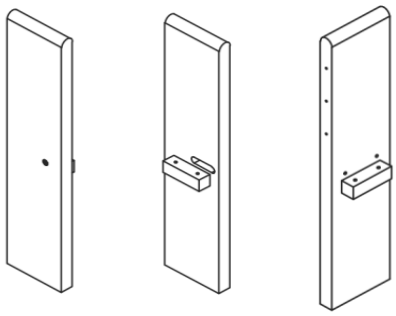

A B C

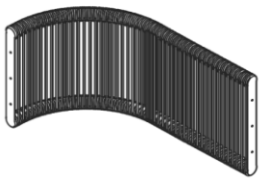

Dx2

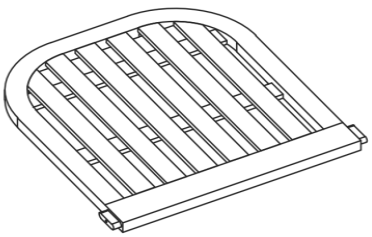

E

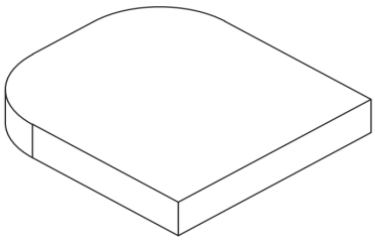

F

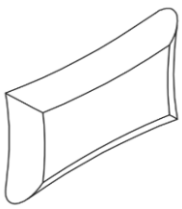

G

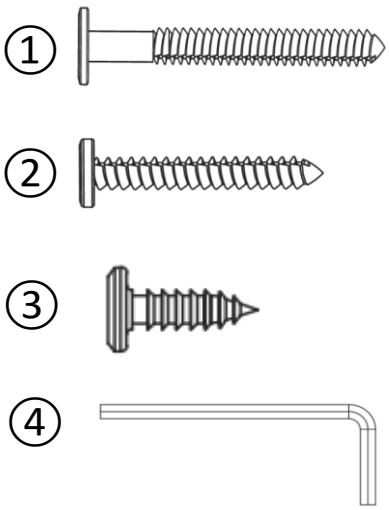

- Read instructions, cover to cover-
- Have 2 adults on hand for assembly-
- Do not assemble on flooring or carpet-
- Assemble on a clean non-marring surface (packing foam)-
- Save all packaging until finished-

Assembly Steps:

Overview:

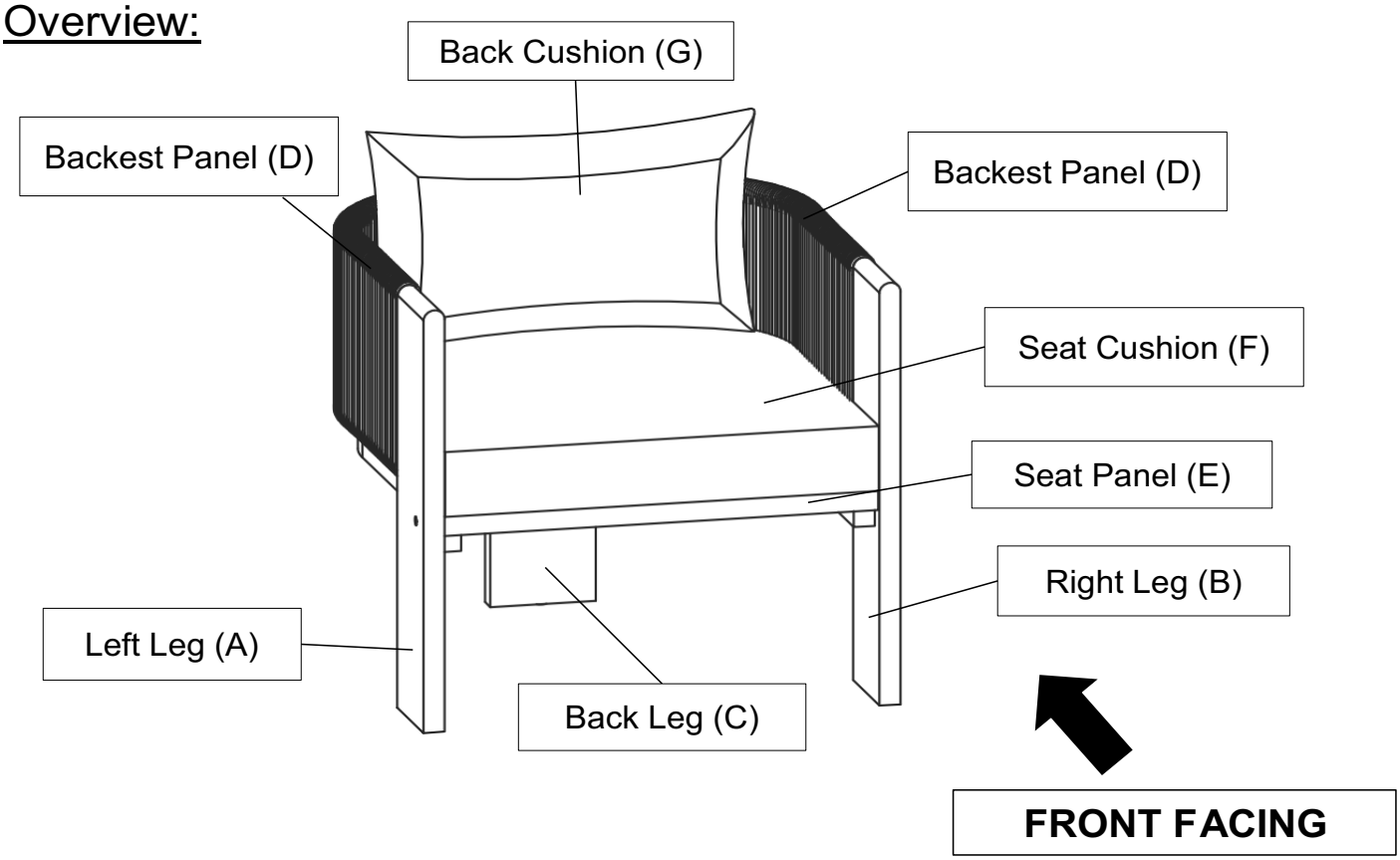

This Chair has multiple parts and may require up to 30 minutes to assemble. To give you an overview of the Chair parts, the above picture is to help you put the various parts into perspective. Please read through the instructions below to familiarise yourself with the parts and steps before assembly.

Step 1:

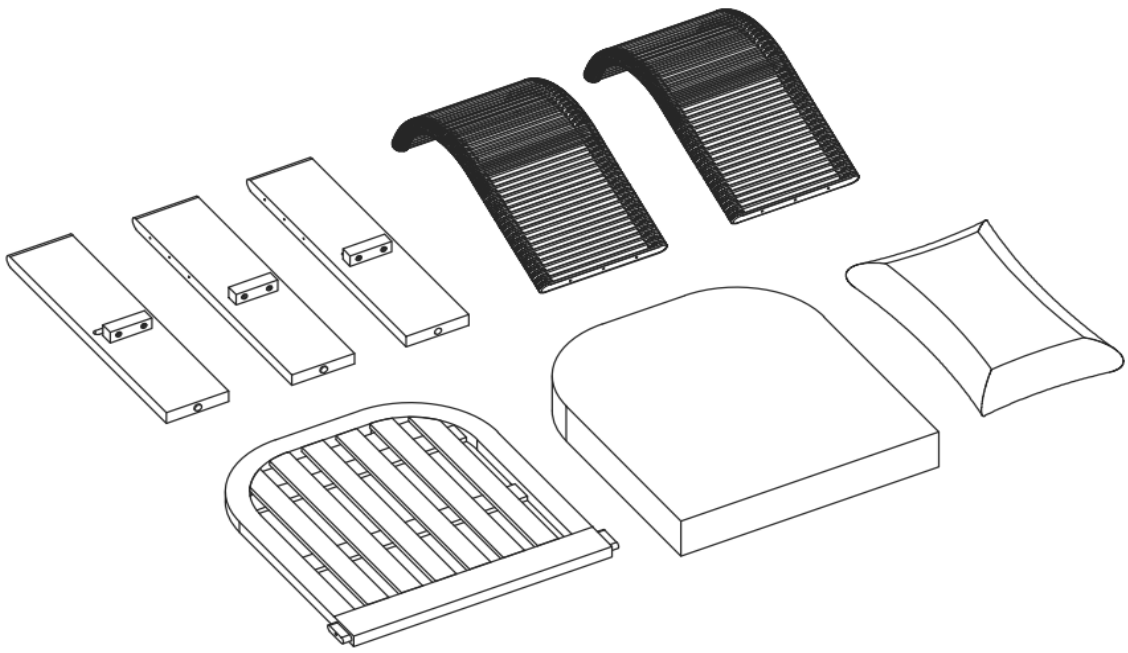

Unpack and place all parts on a clean, non-marring surface.

Step 2:

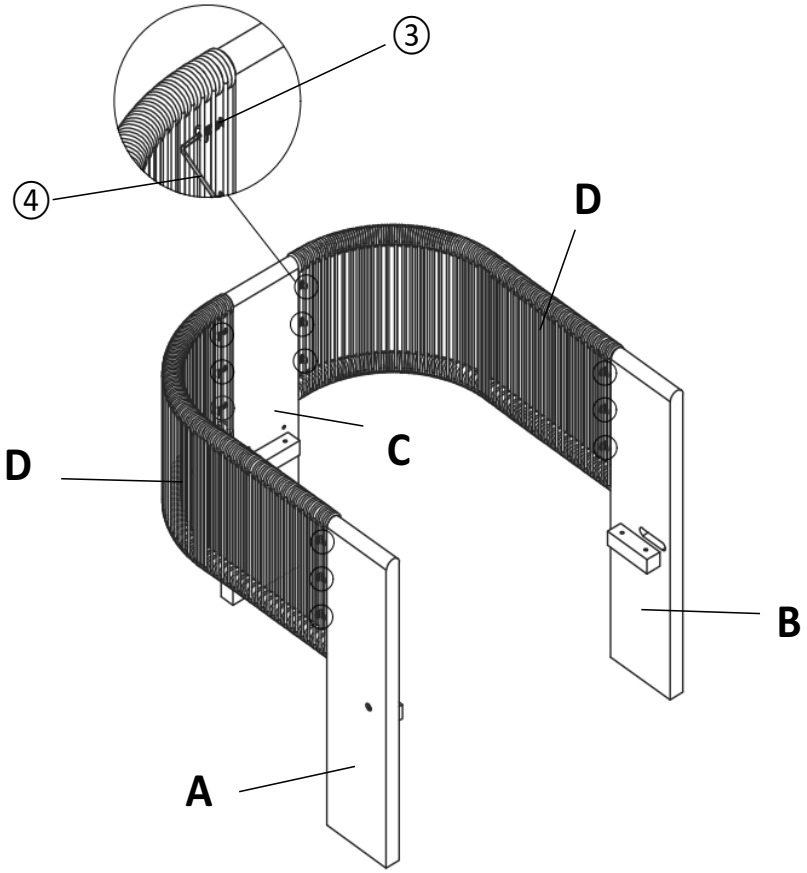

With the help of your adult partner, attach the both Backest Panels (D) to the Left Leg (A), Right Leg (B) and Back Leg (C) as shown above then secure by using Screws (③) and Allen Wrench.

Do not fully tighten the Screws.

Step 3:

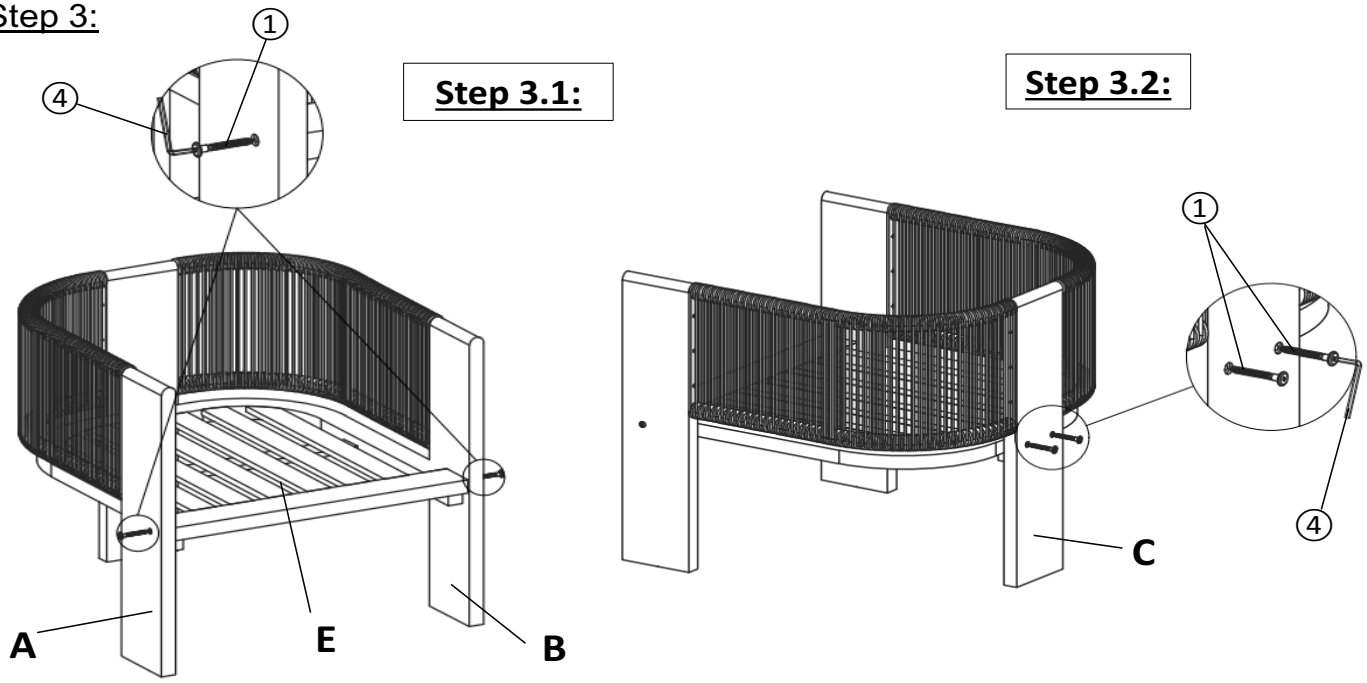

Step 3.1, With the help of your adult partner, attach the Seat Panel (E) to the Left Leg (A)and Right Leg (B) of the assembled part in Step 2 then secure by using Screws (①) and Allen Wrench (④) as shown above.
Step 3.2, Then secure the Seat Panel (E) to the Back Leg (C) by using Screws (①) and Allen Wrench (④) as shown above.
Do not fully tighten the Screws.

Step 4:

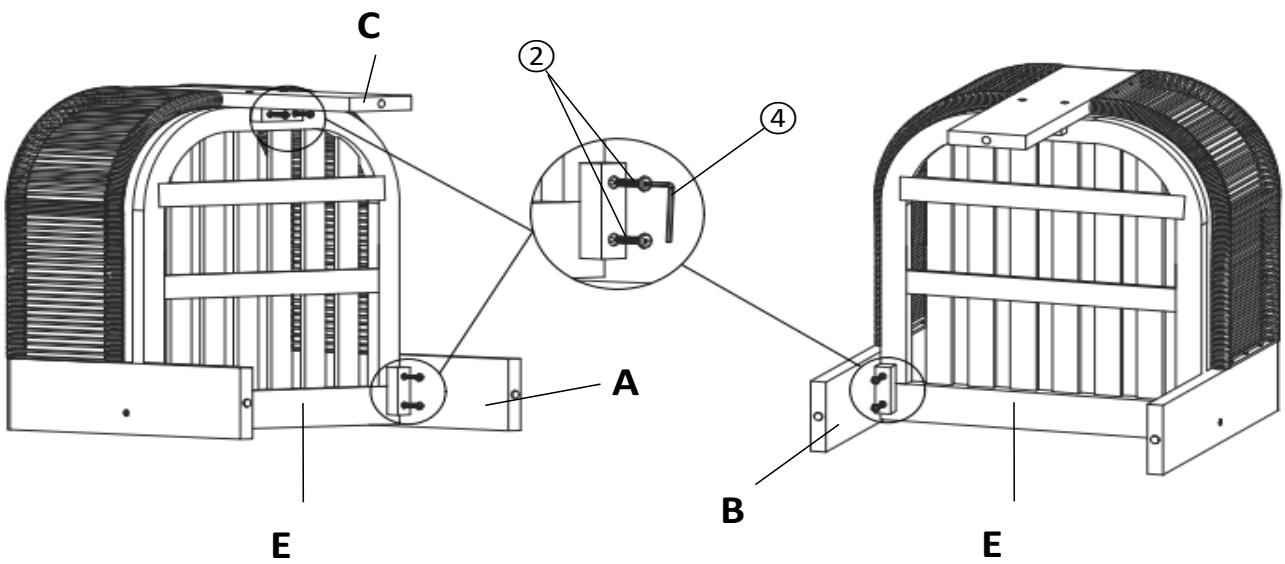

With the help of your adult partner, turn the chair facing down on a clean, non-marring surface. Then secure the Left Leg (A), Right Leg (B) and Back Leg (C)to the Seat Panel(E) by using Screws (②) and Allen Wrench (④) as shown above.
Do not fully tighten the Screws.

Step 5:

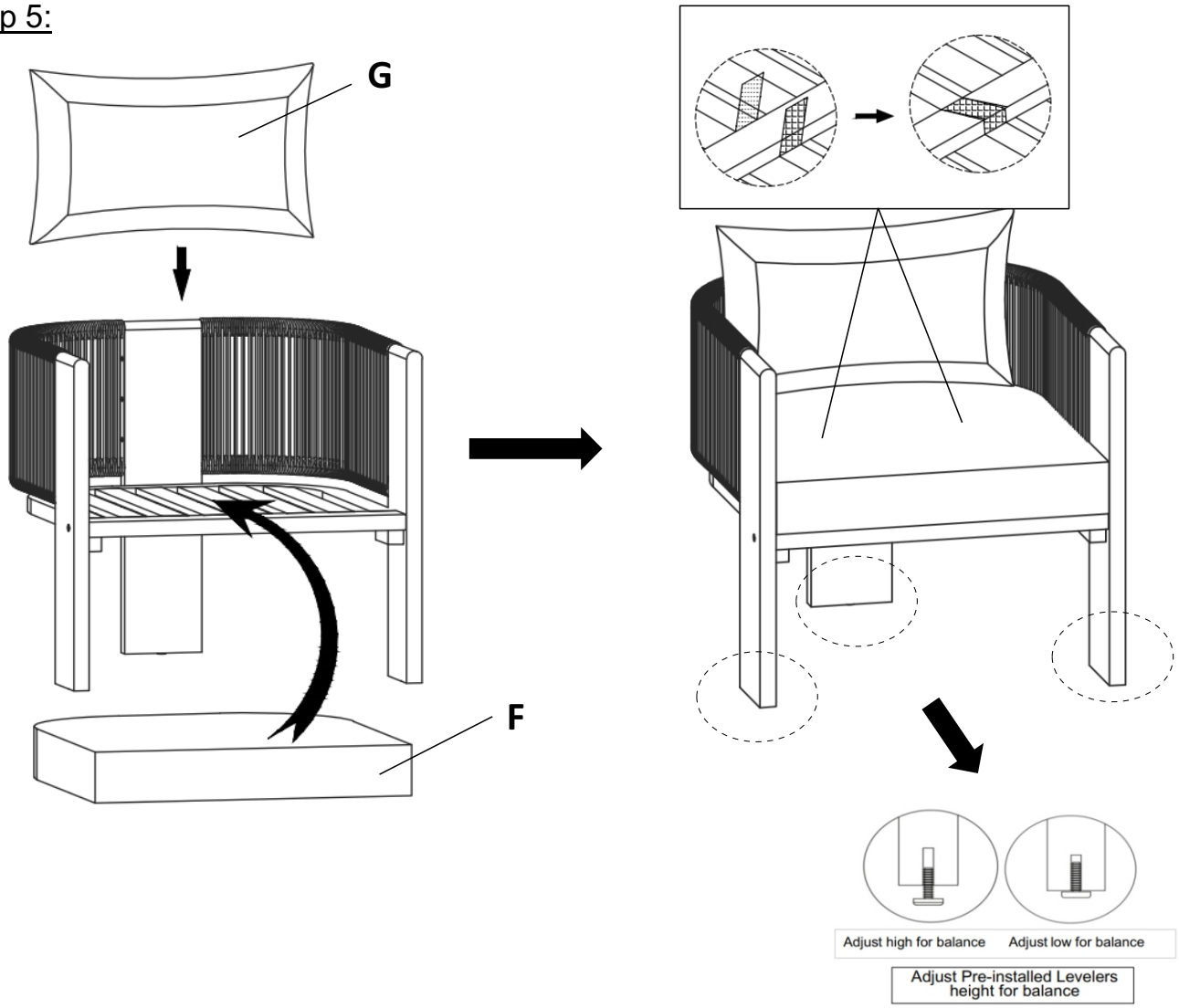

Inspect it and make sure all parts are adequately connected.
Gently and gracefully, sit onto the Chair.
This will help to align all the parts at all joint areas.
Then get off the Chair and in a sequential manner, gradually tighten all Screws at all joints until evenly connected.
If there are still wobbles, loosen the Screws and execute this same process.
Adjust Pre-installed Levelers height for balance.
Place the Seat Cushion (F) on the Chair by affix the Magic Tape Straps on the Seat Panel(E) and then place Back Cushion (G) on to the Seat Cushion (F) as shown above.
WARNING!! IF CHAIR IS NOT STABLE, IT COULD LEAD TO DAMAGING THE PRODUCT.
Your Chair is ready for use.
This Chair can only be used on a flat, level surface.