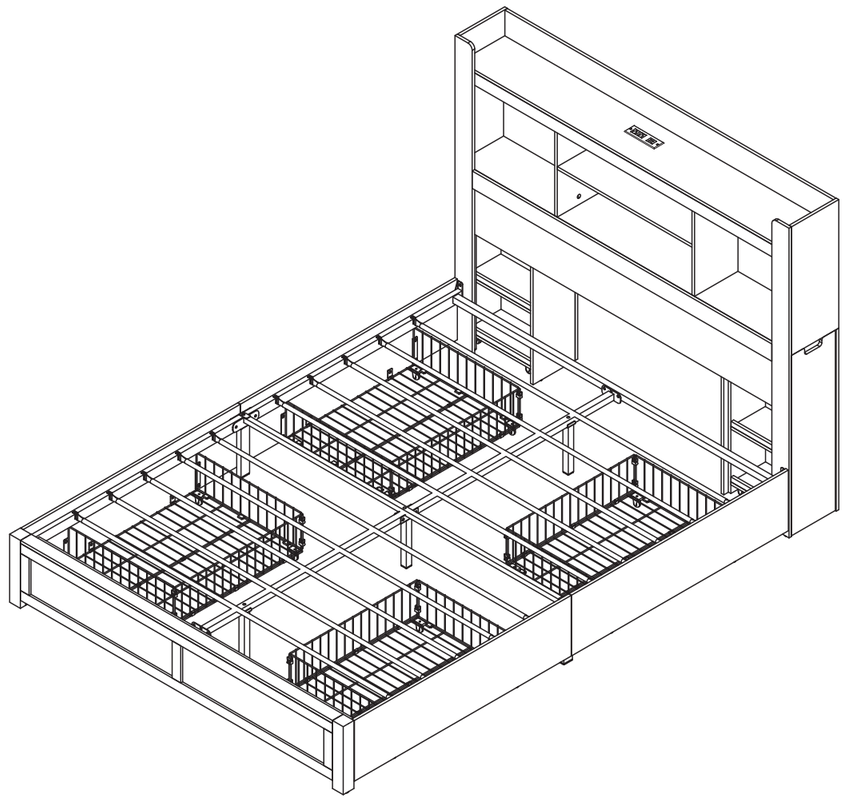
Storage Platform Bed-F/Q

Assembly Instructions



Dear Customers,

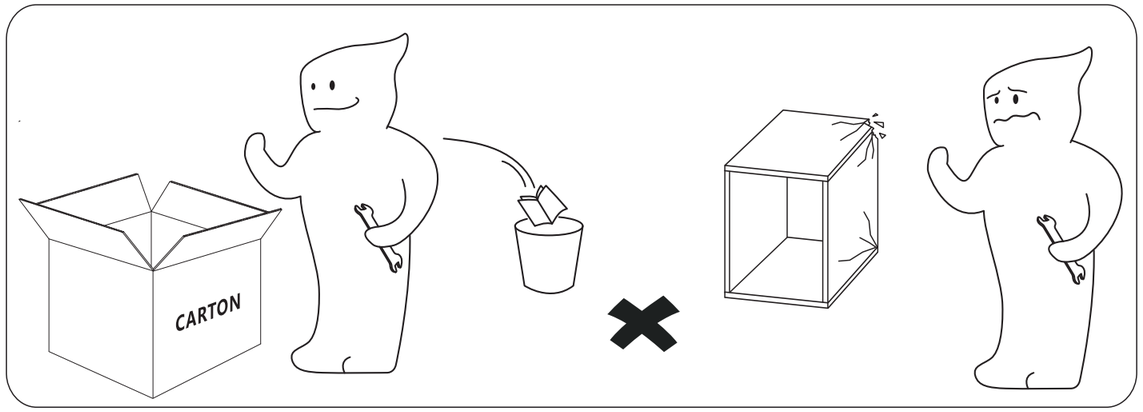
Thank you for purchasing our product. Please read this instruction manual carefully after receiving this product. It will help you assemble this product quickly, safely and correctly. You can keep this manual for future reference.

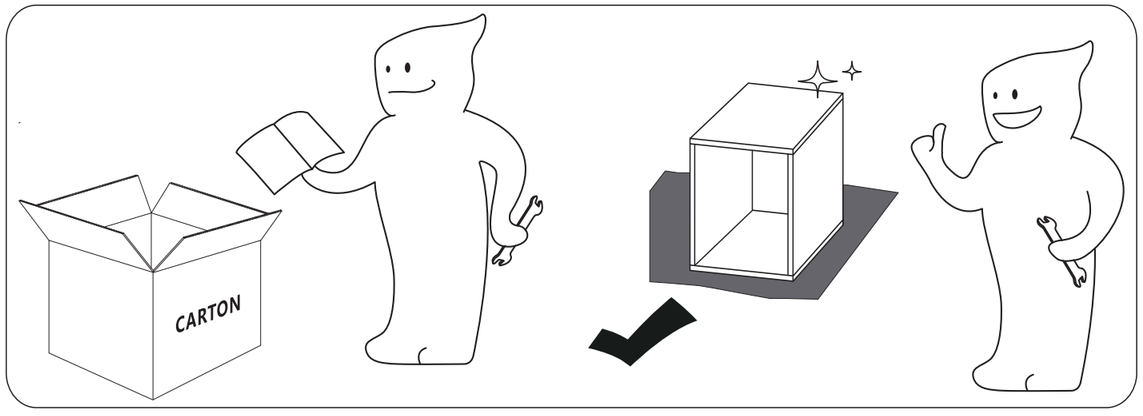
MADE IN CHINA

ASSEMBLY INSTRUCTIONS

! IMPORTANT

Please follow the instruction manuals and use a pad to protect the product during your assembly.



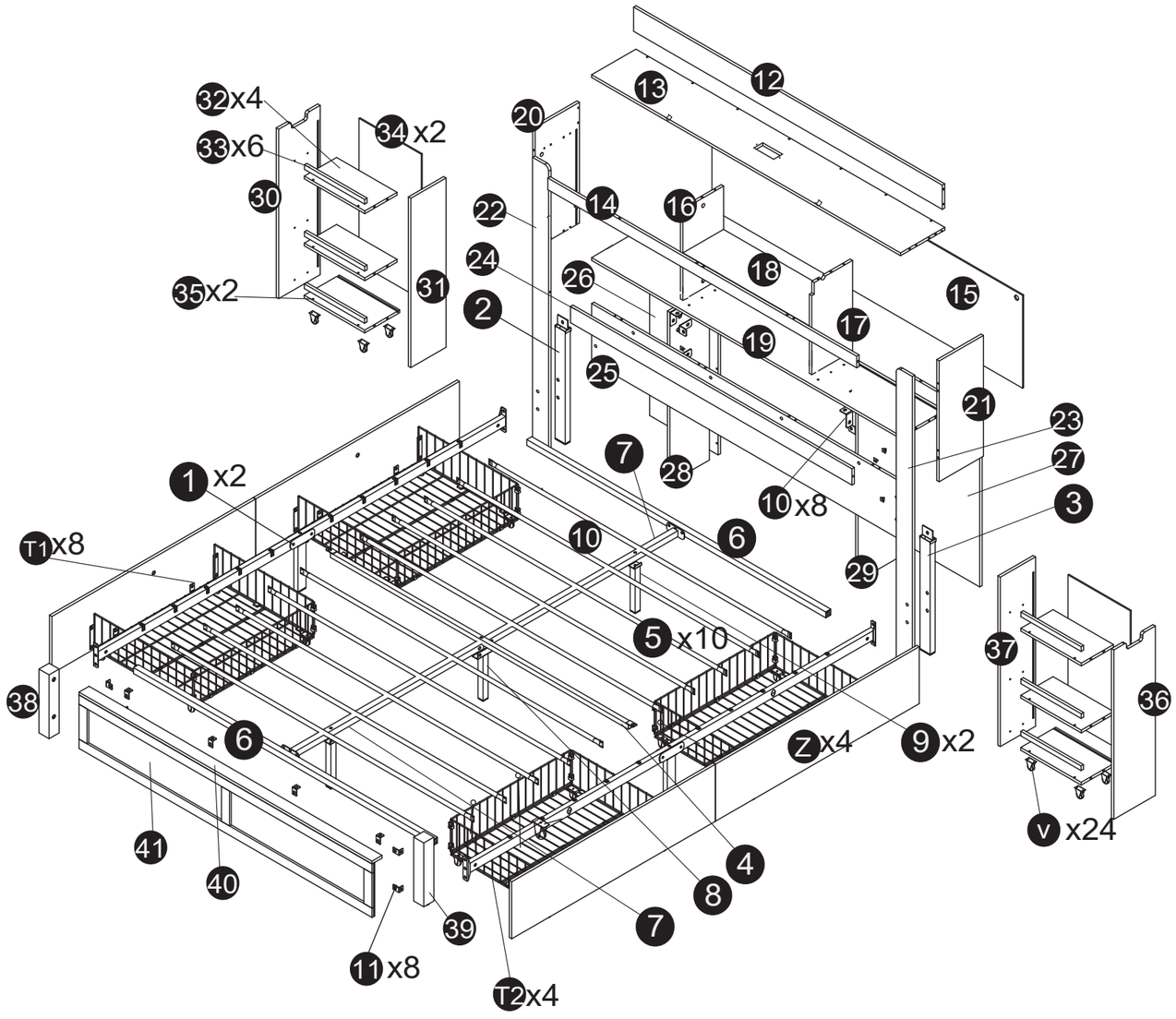


Note:

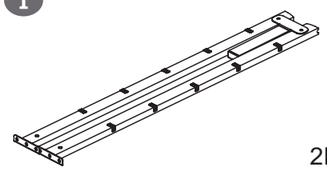
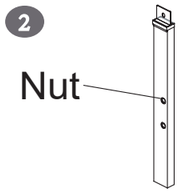
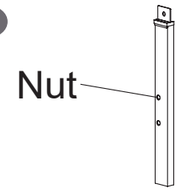
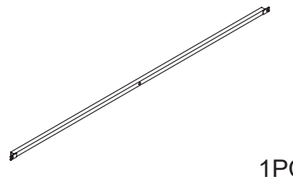
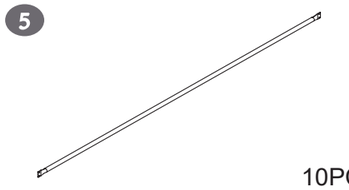
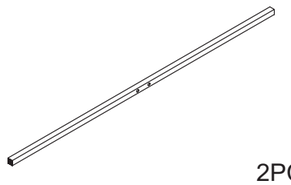
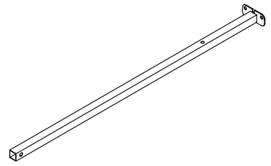
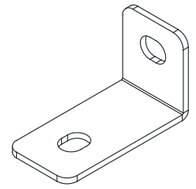
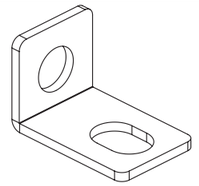
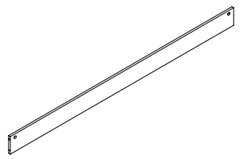
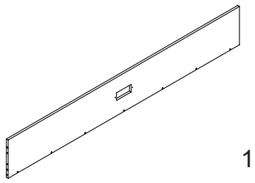
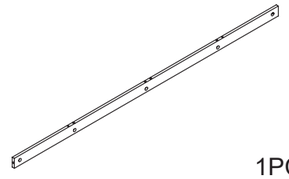
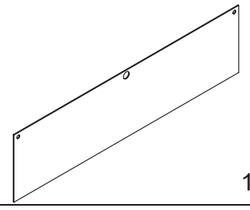
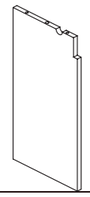
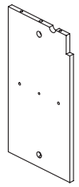
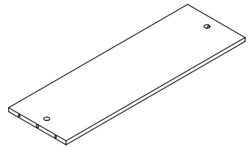
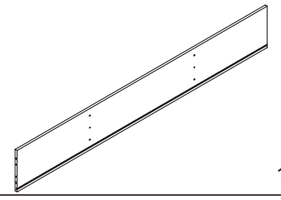
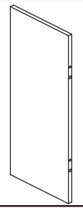
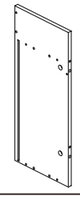
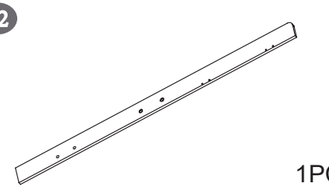
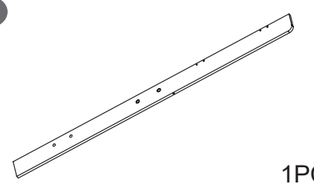
1. Should be assembled on flat ground to keep balance.

2. Before completing the installation, do not tighten the screws.

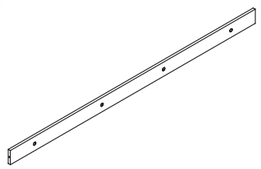
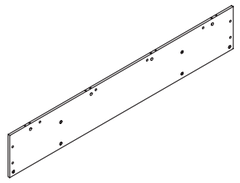
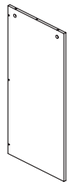
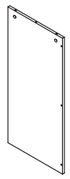
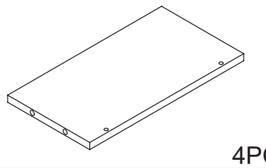
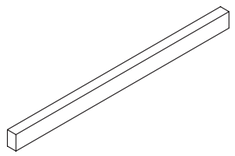
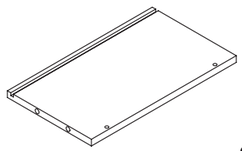
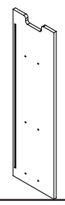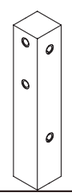
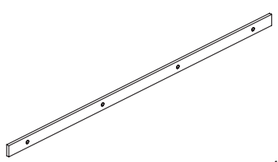
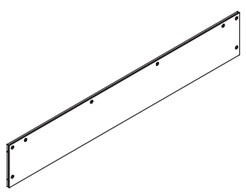
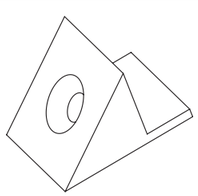
For easier and better assembly, **2** or more adults are required.



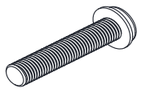
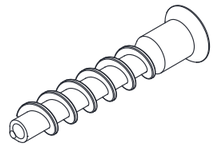
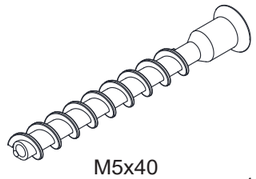
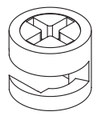
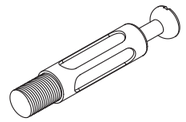
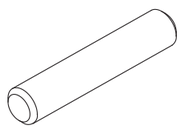
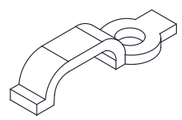
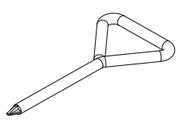
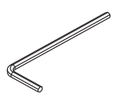
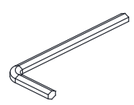
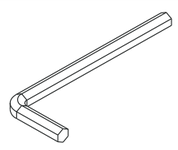
The box 1

1  2PCS	2  1PC	3  1PC
4  1PC	5  10PCS	6  2PCS
7  2PCS	10  8PCS	11  8PCS
12  1PC	13  1PC	14  1PC
15  1PC	16  1PC	17  1PC
18  1PC	19  1PC	20  1PC
21  1PC	22  1PC	23  1PC

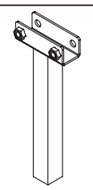
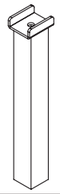
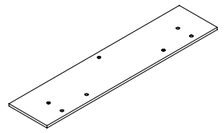
The box 1 continued

24  1PC	25  1PC	26  1PC
27  1PC	28  1PC	29  1PC
30  1PC	31  1PC	32  4PCS
33  6PCS	34  2PCS	35  2PCS
36  1PC	37  1PC	38  1PC
39  1PC	40  1PC	41  1PC
42  22PCS	V  24PCS	T1  8PCS

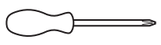
The box 1 continued

A  ST3.2x12 26PCS	B  ST4.2x12 18PCS	C  M8x12 54PCS
D  M8x14 Colored Zinc 4PCS	E  M8x18 12PCS	F  M8x20 Colored Zinc 8PCS
G  M8x40 12PCS	H  M8x55 3PCS	I  M5x25 12PCS
J  M5x40 10PCS	K  φ15x9.5 57PCS	L  φ7x40 57PCS
M  φ6x40 40PCS	N  4PCS	O  M4x10 16PCS
P  1PC	Q  M4 1PC	R  M5 1PC
S  M8 1PC	U 1PC	K1 1PC

The box 2

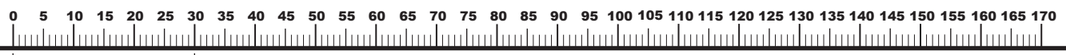
8  1PC	9  2PCS	Z  4PCS
T2  4PCS		

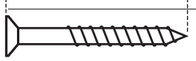
Tools required



Phillips screwdriver
(medium & large)

Ruler - Use this ruler to help correctly identify the screws

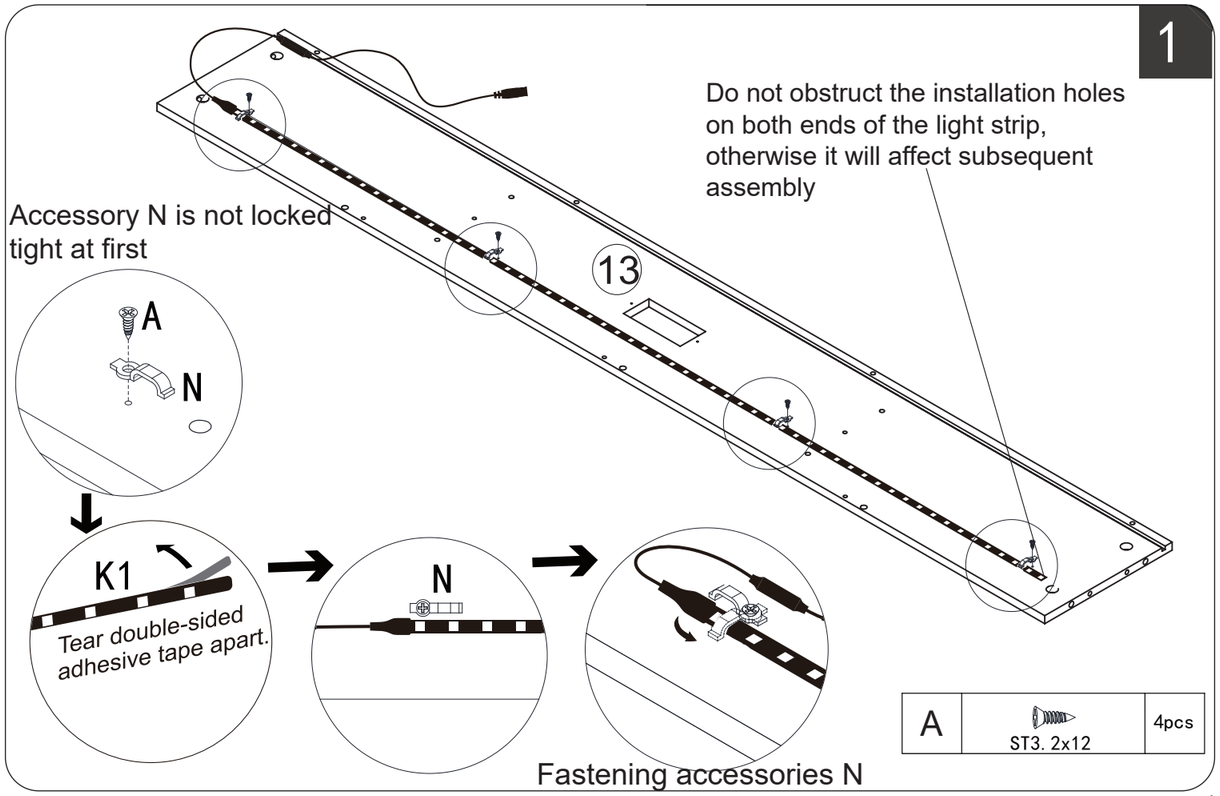




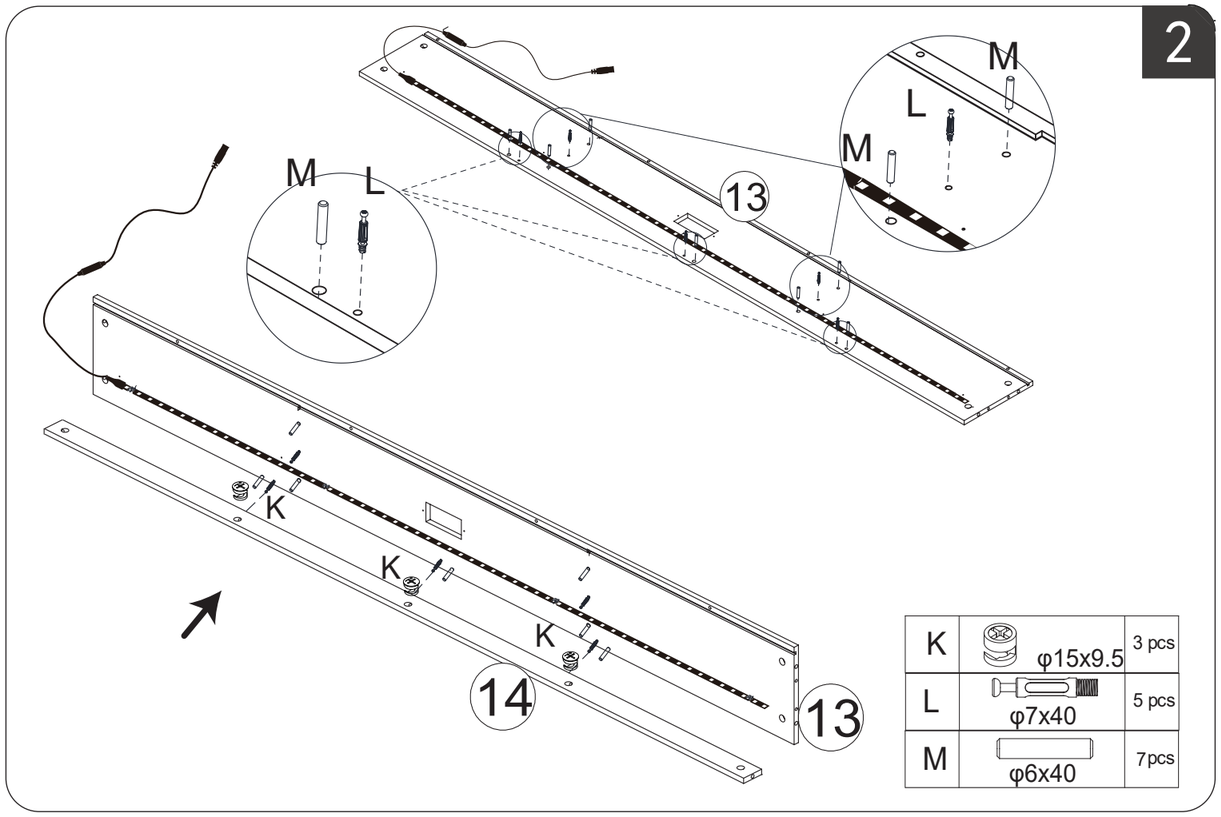
The screws length is measured from the head to the point (30mm screw shown).

Please make sure to check that all screws are tightened after completing the entire installation.

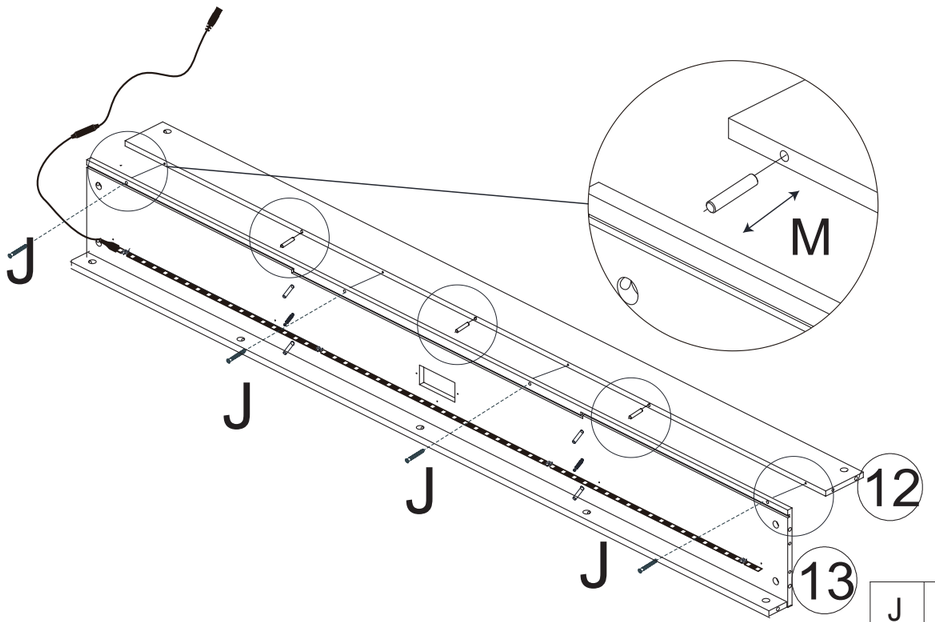
1



2

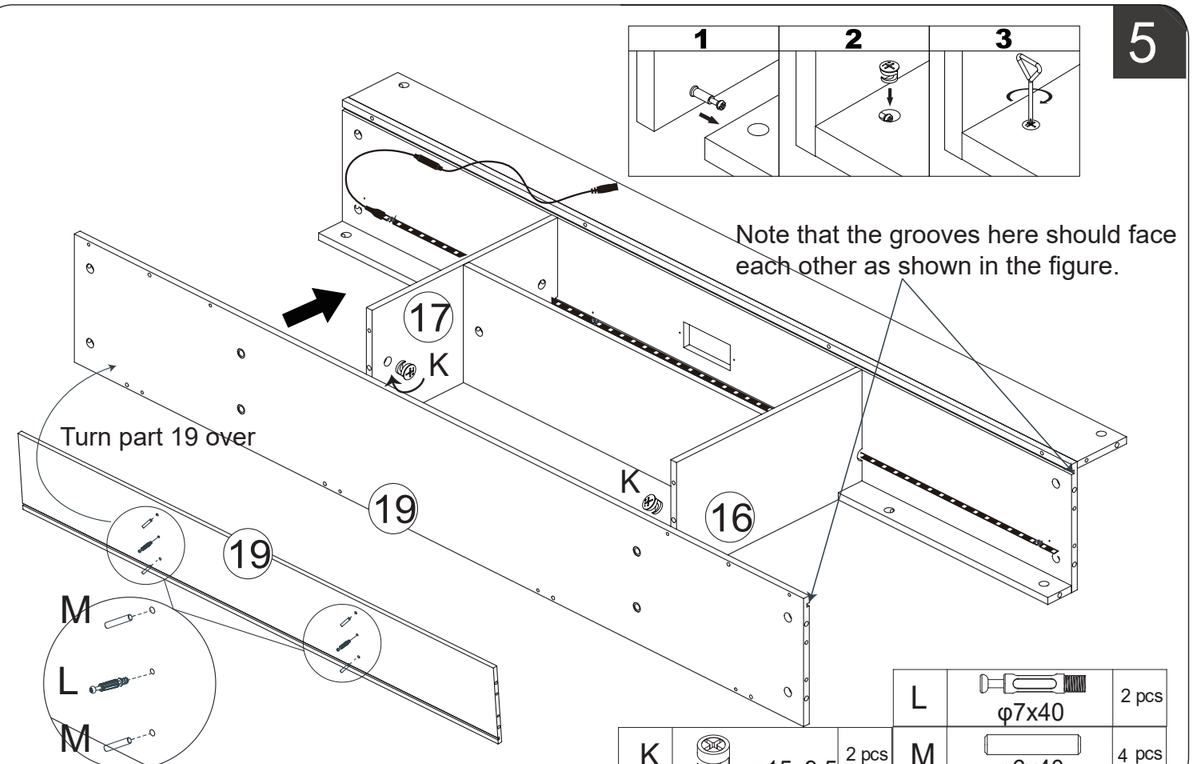


3



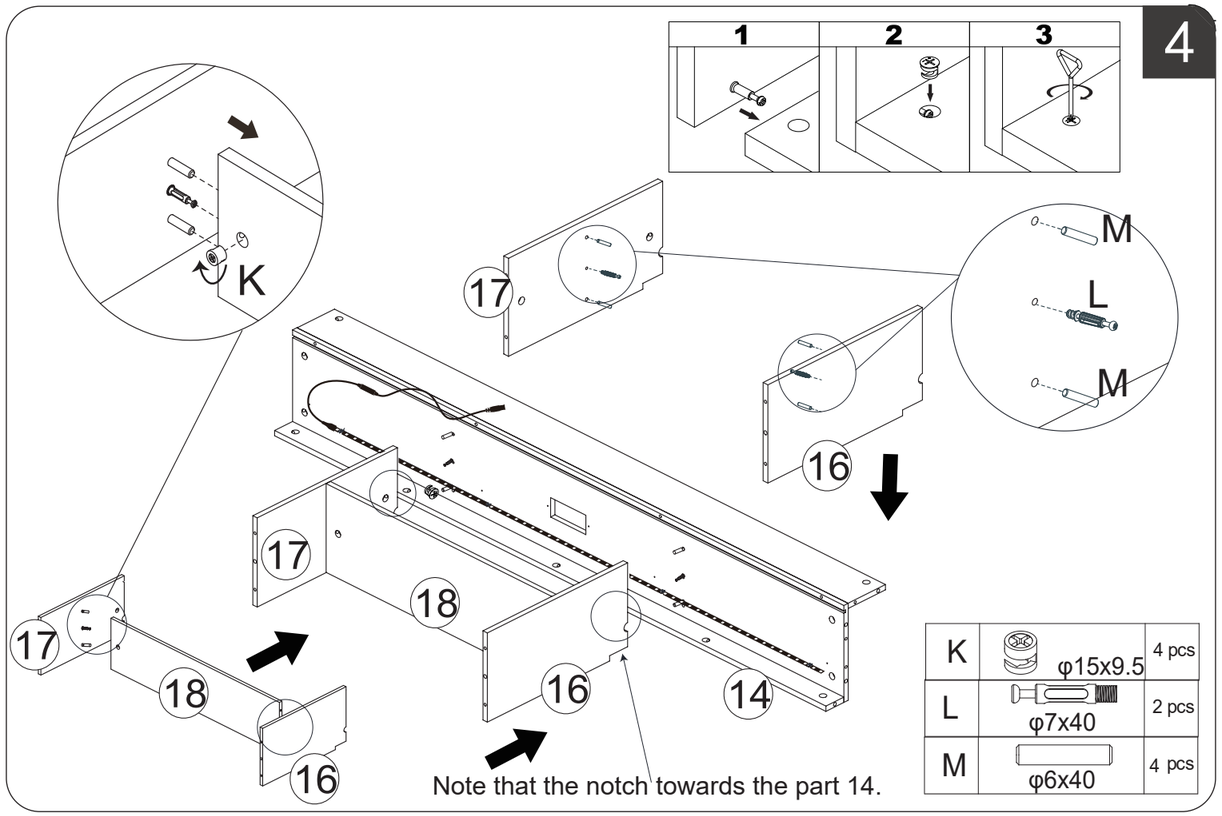
J	M5x40	4 pcs
M	φ6x40	3pcs

5



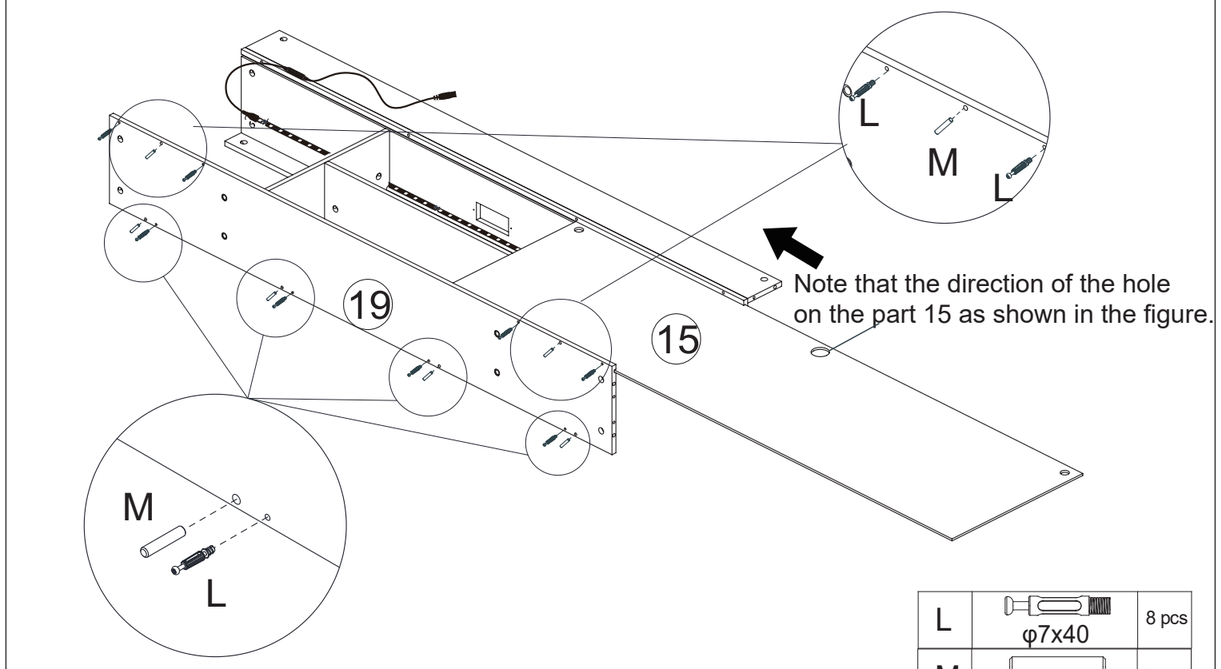
K	φ15x9.5	2 pcs
L	φ7x40	2 pcs
M	φ6x40	4 pcs

4



K	φ15x9.5	4 pcs
L	φ7x40	2 pcs
M	φ6x40	4 pcs

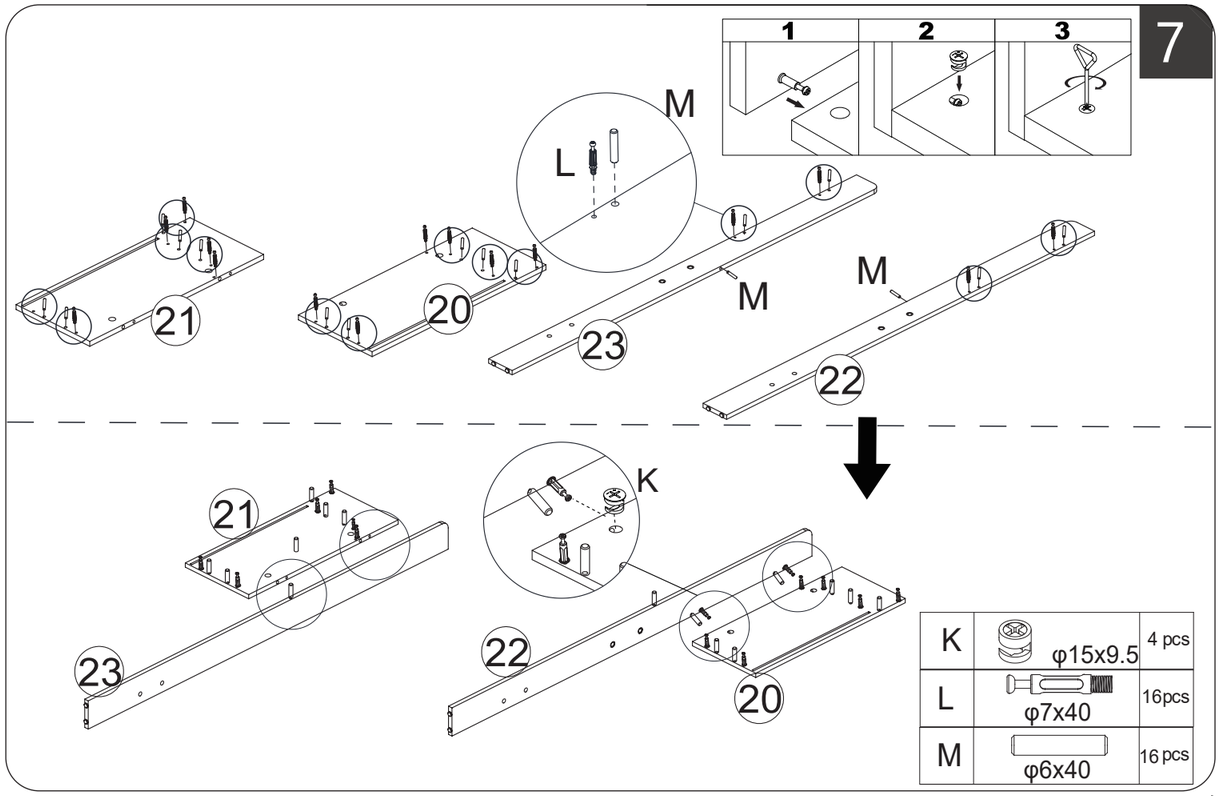
6



L	φ7x40	8 pcs
M	φ6x40	6 pcs

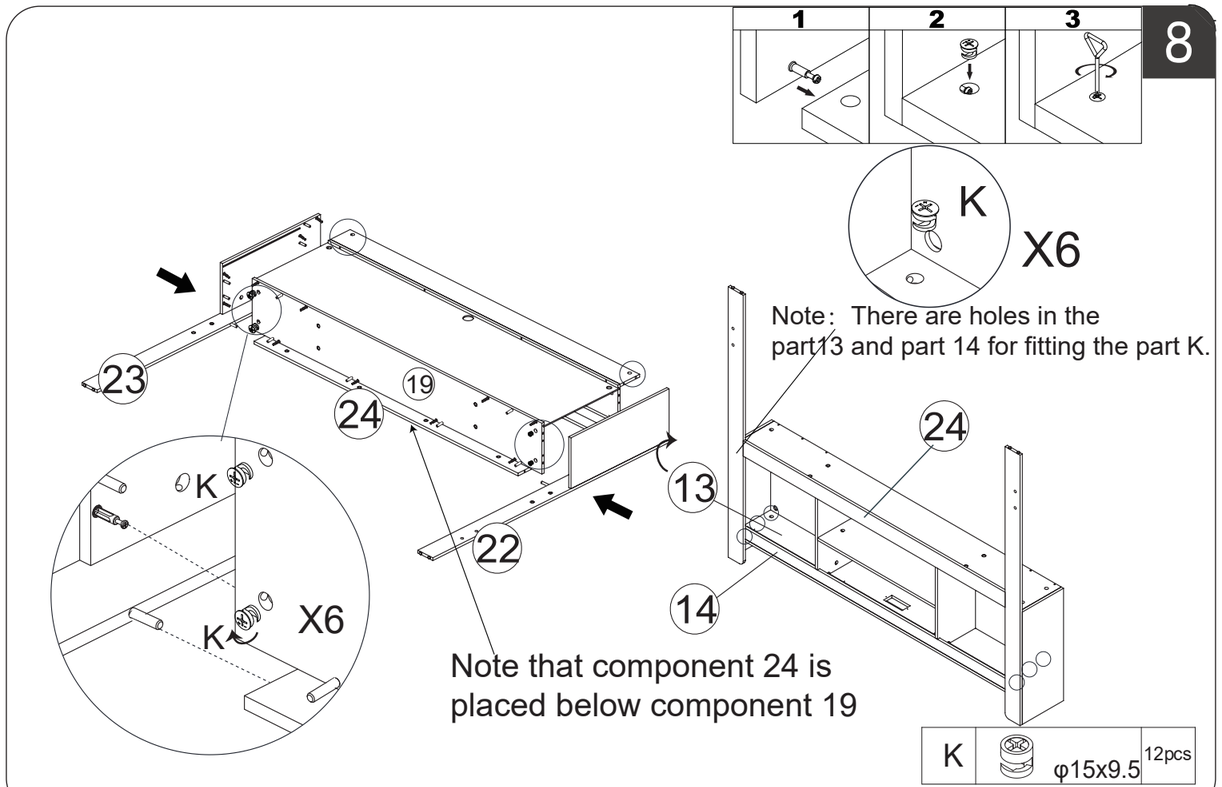
ASSEMBLY INSTRUCTIONS

7



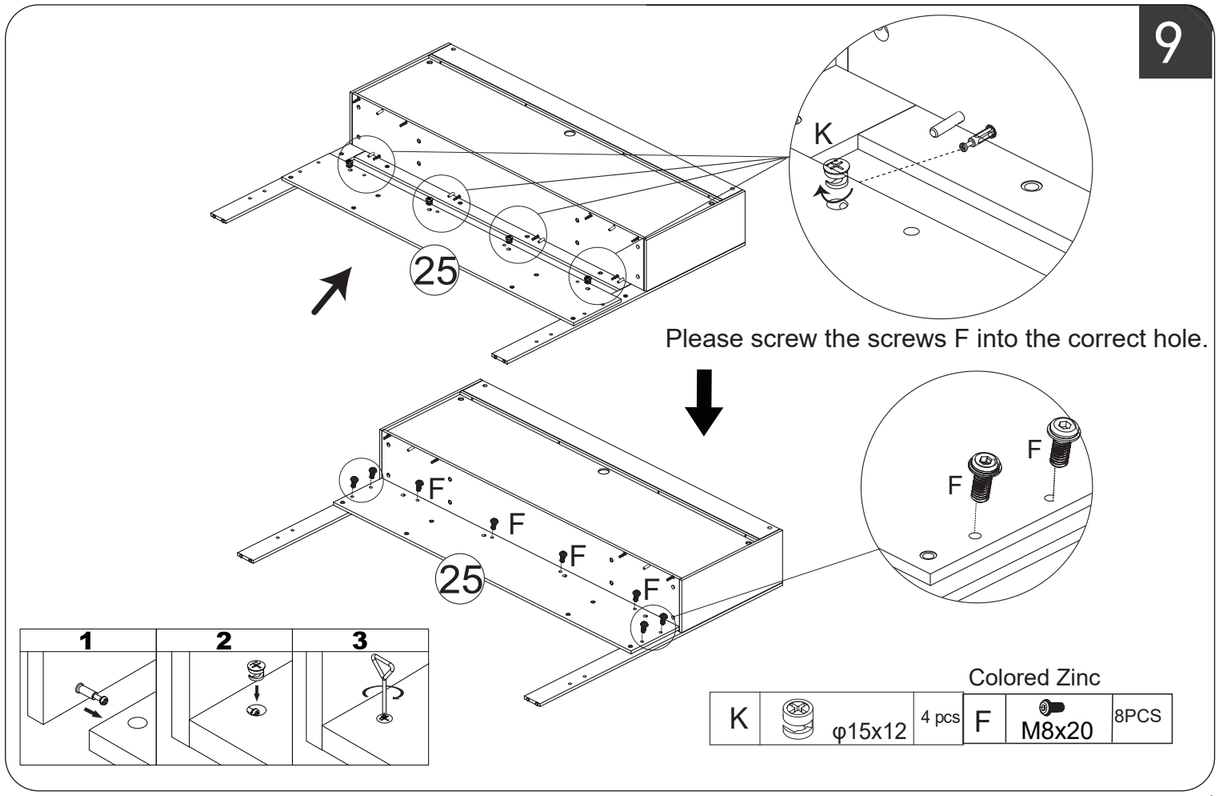
K	φ15x9.5	4 pcs
L	φ7x40	16pcs
M	φ6x40	16 pcs

8



K	φ15x9.5	12pcs

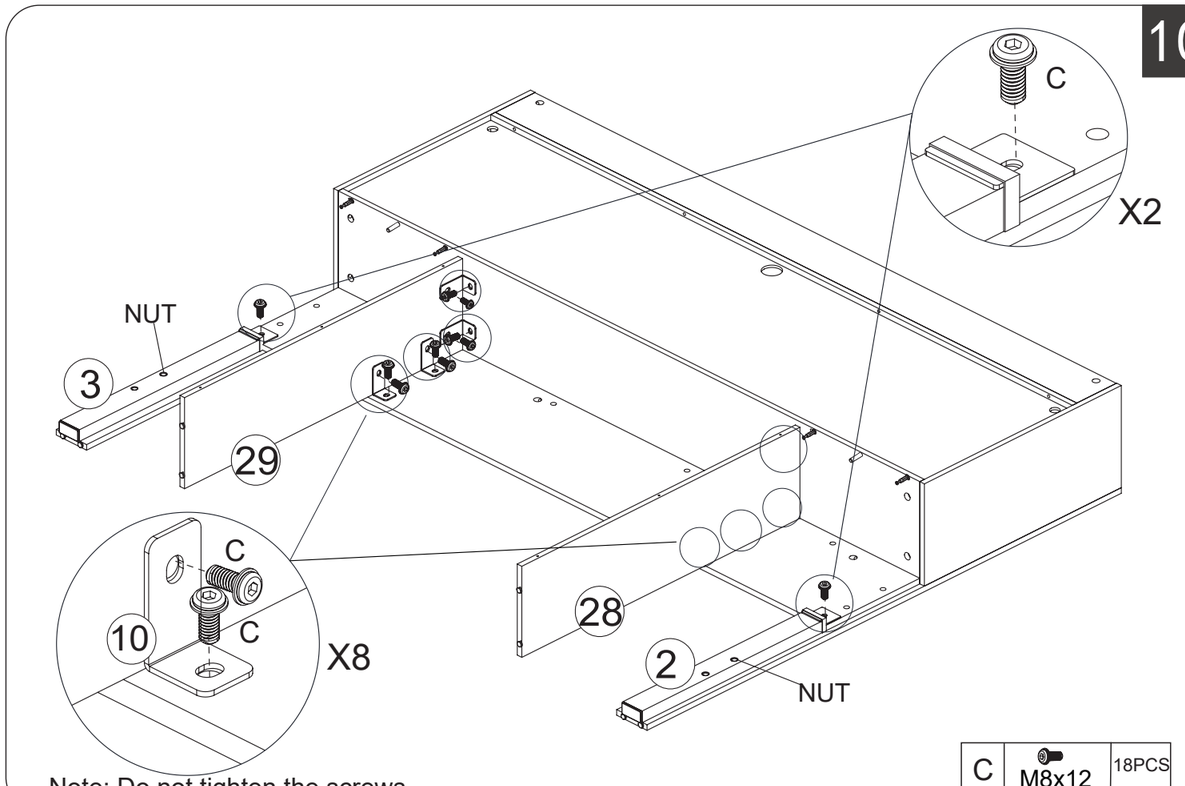
9



Colored Zinc

K	φ15x12	4 pcs	F	M8x20	8PCS

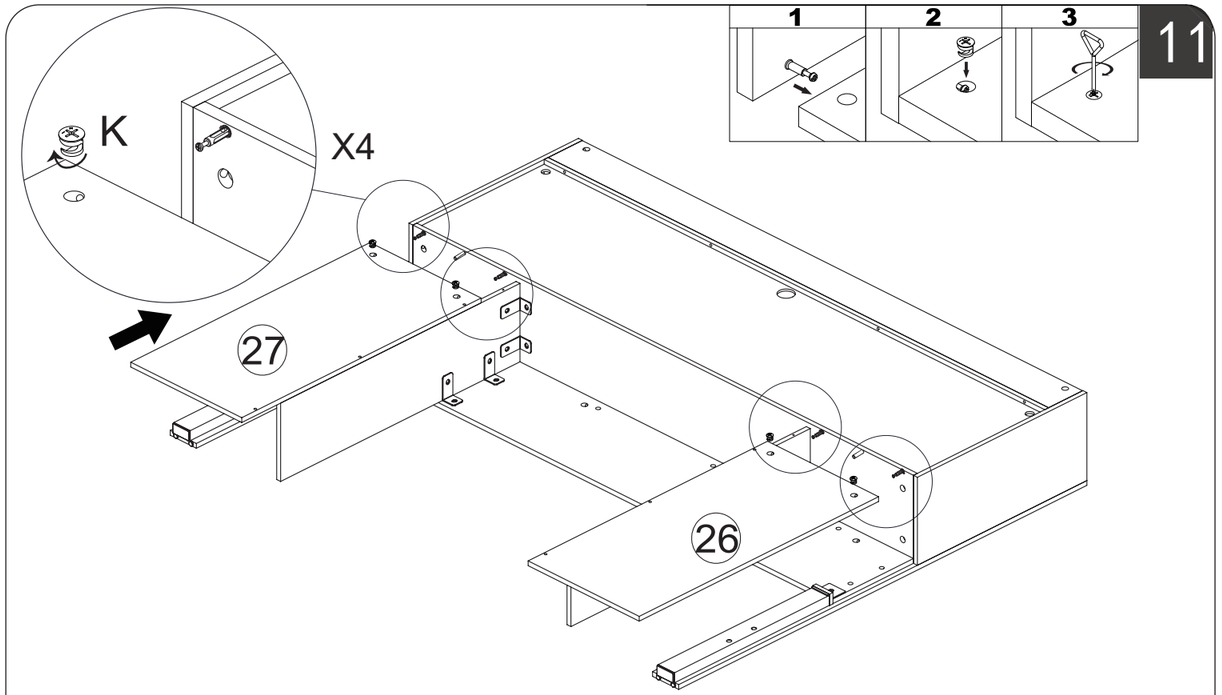
10



Note: Do not tighten the screws

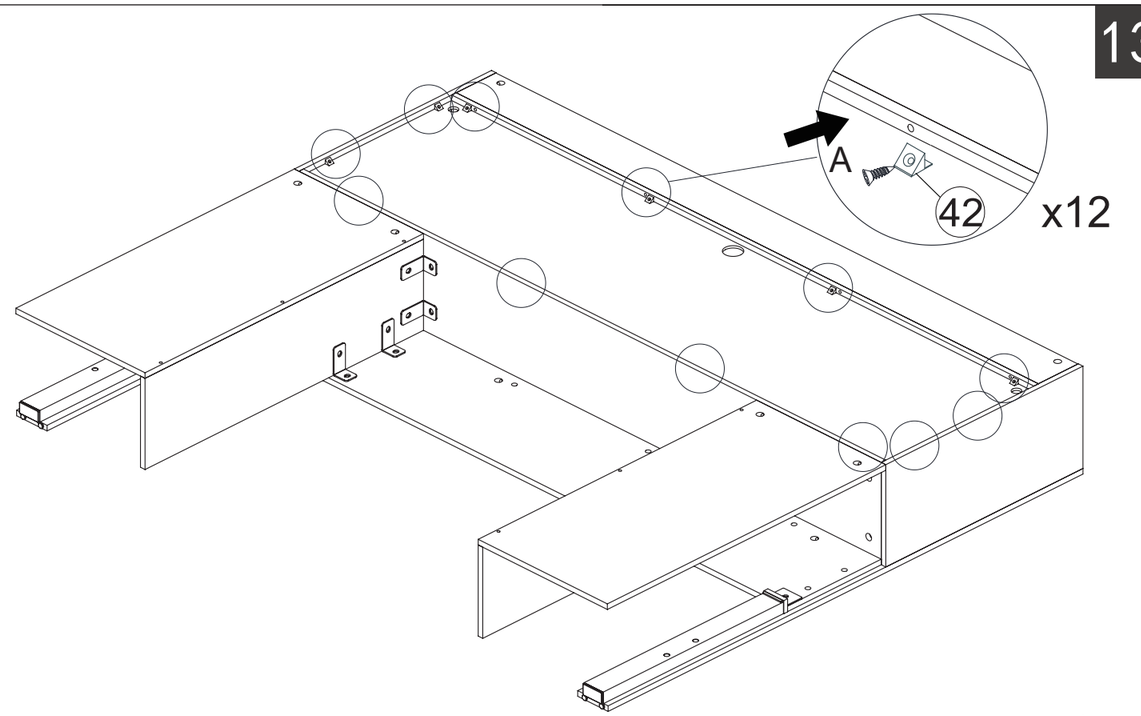
C	M8x12	18PCS

11



K	φ15x9.5	4 pcs

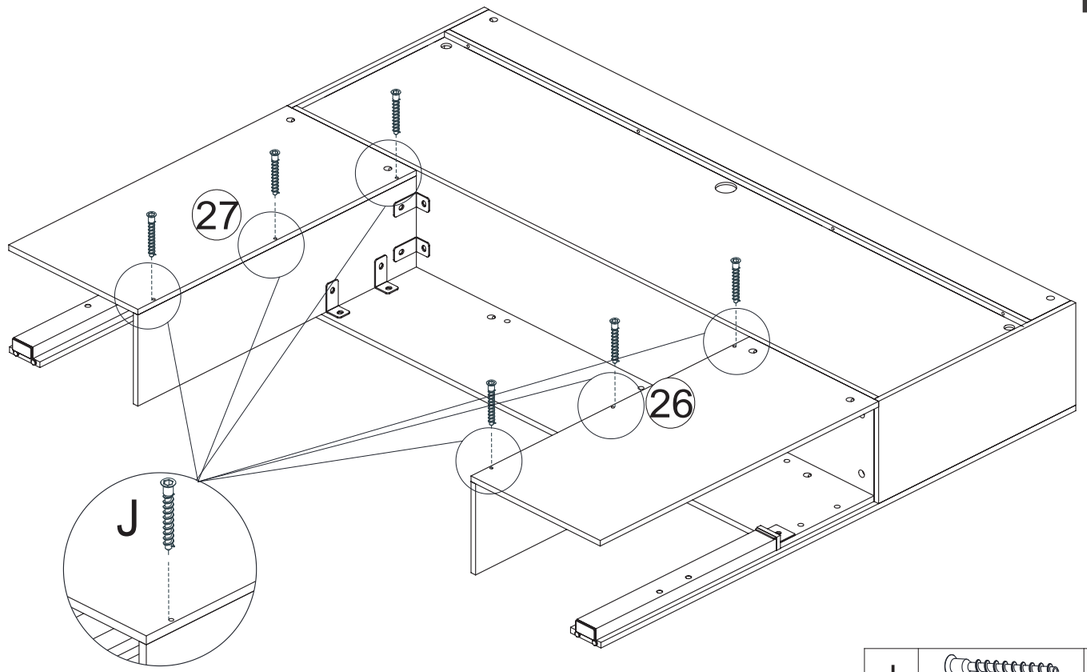
13



A	ST3. 2x12	12pcs

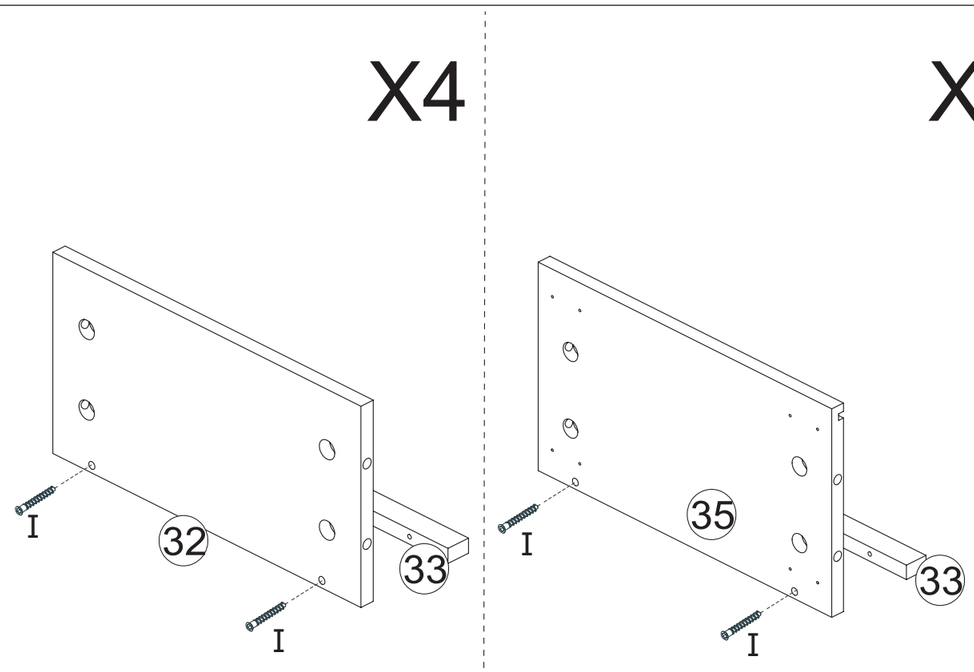
12

Please use this step to tighten all the screws that were left loose in step ten.



J	M5x40	6 pcs

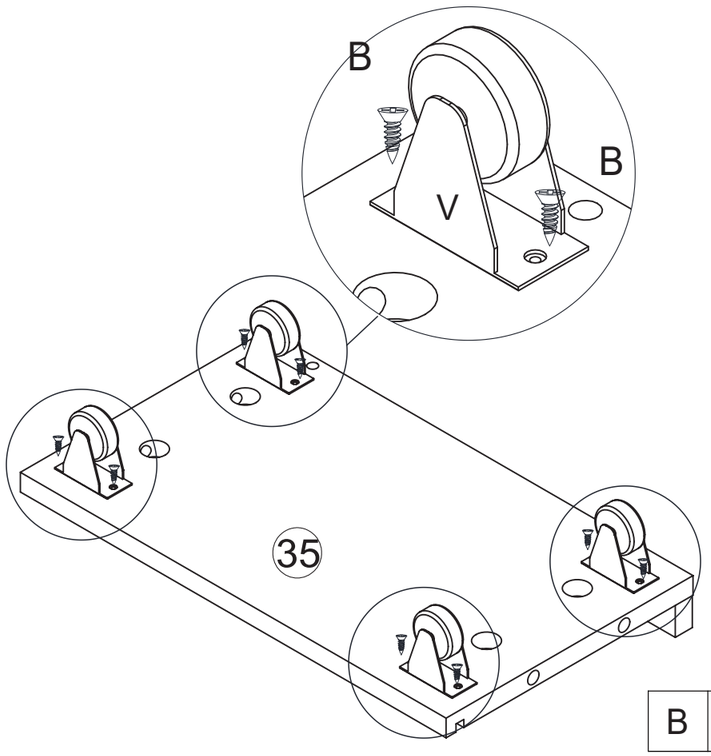
14



I	M5X25	12pcs

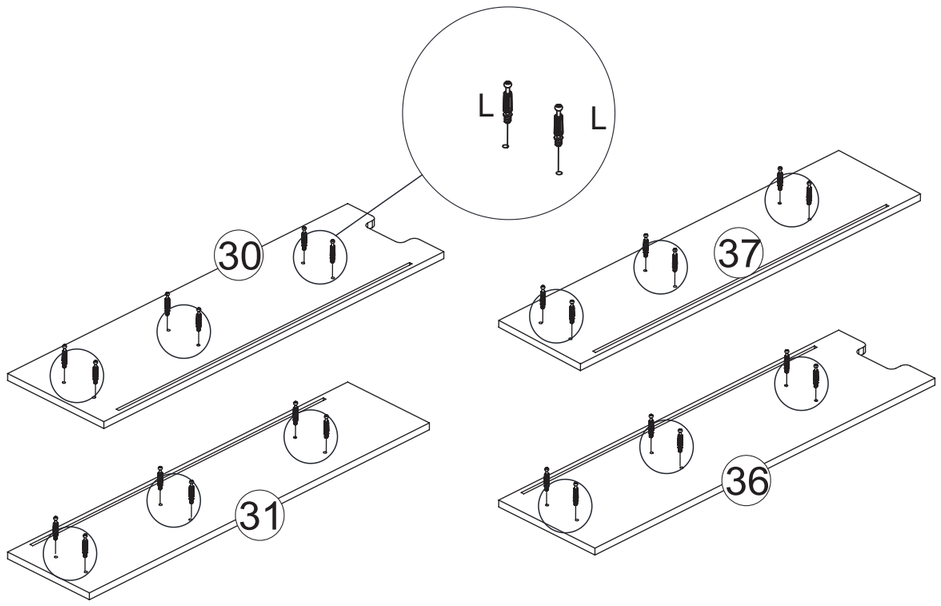
15

X2



B	ST4. 2x12	16pcs

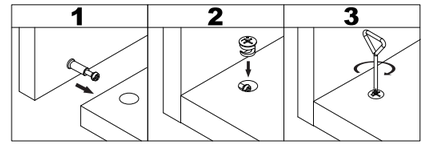
16



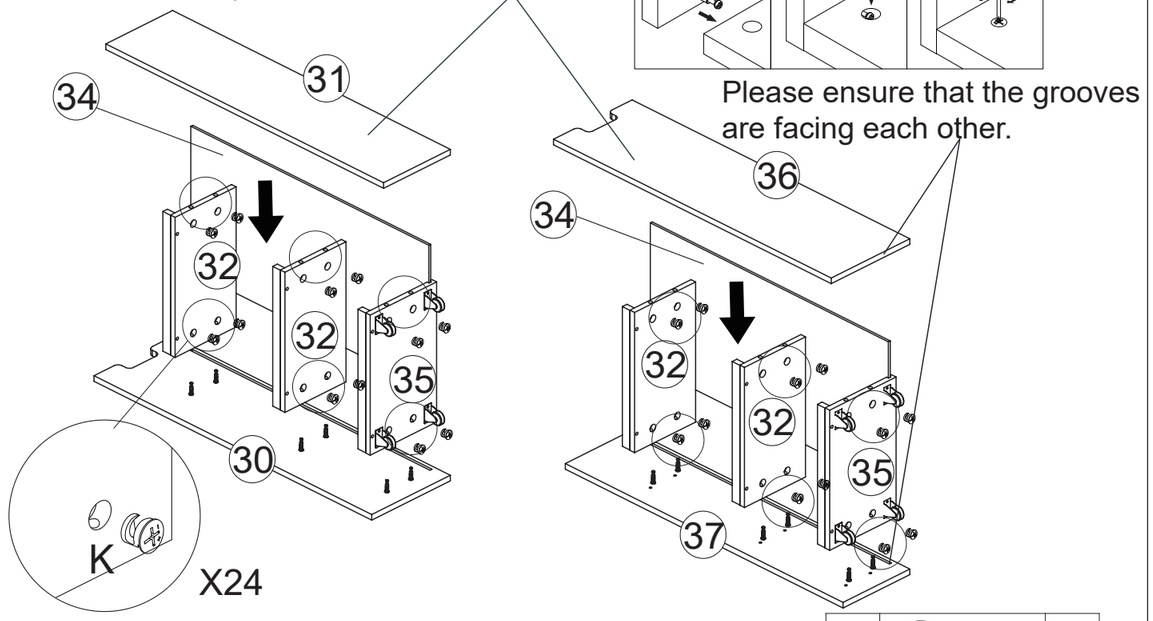
L	φ7x40	24pcs

17

Note：Install parts 31 and 36 at the end.

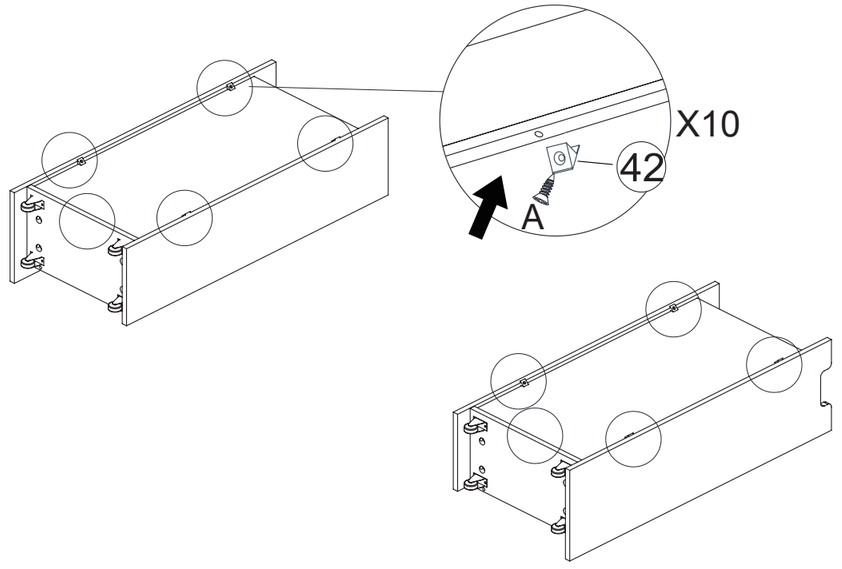


Please ensure that the grooves are facing each other.



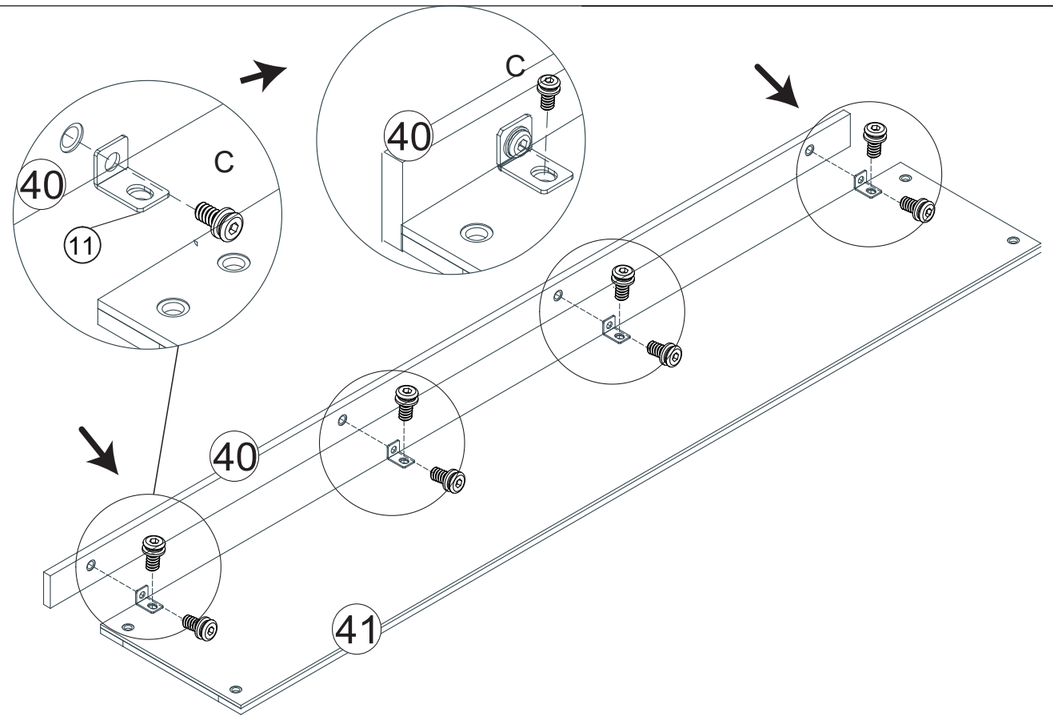
K	φ15x9.5	24pcs

18



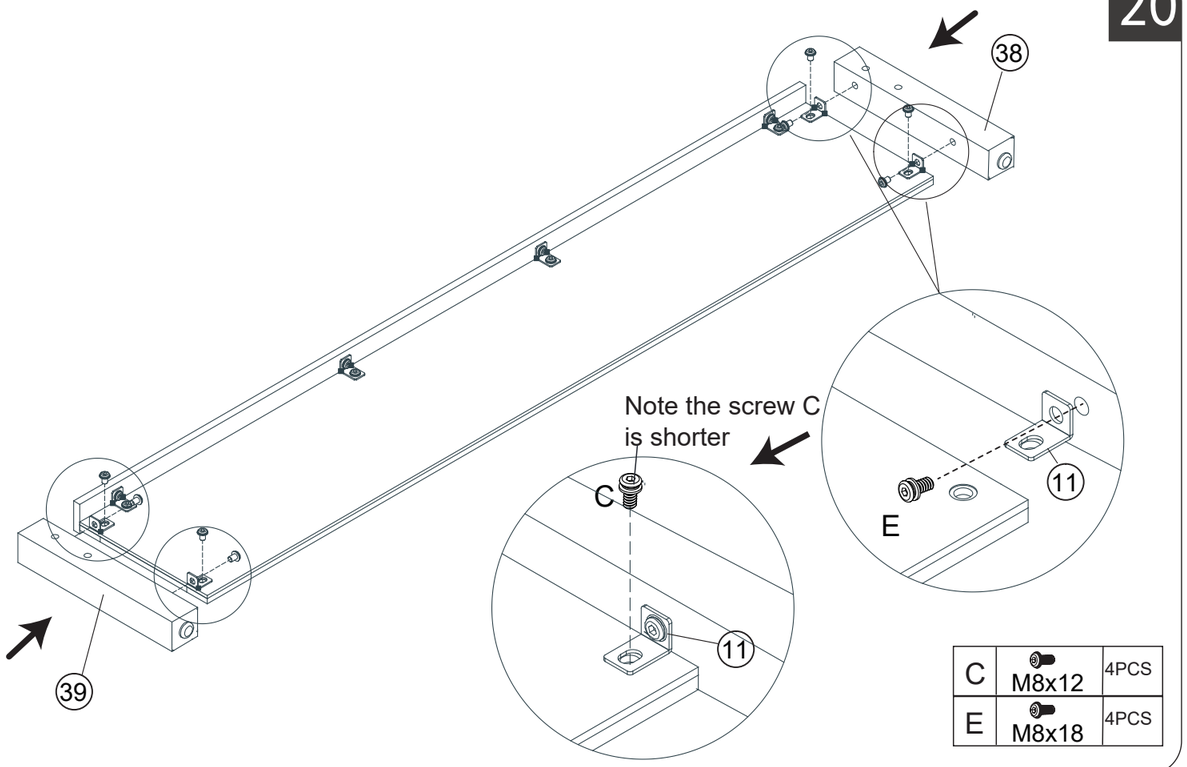
A	ST3. 2x12	10pcs

19



C	M8x12	8PCS

20



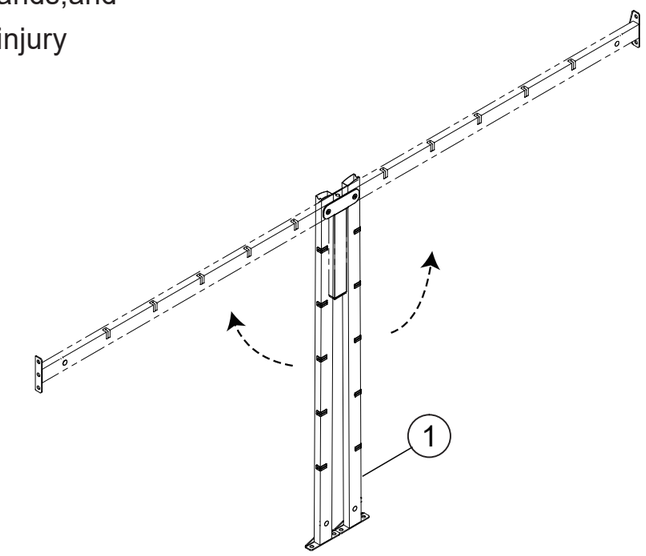
C	M8x12	4PCS
E	M8x18	4PCS

21

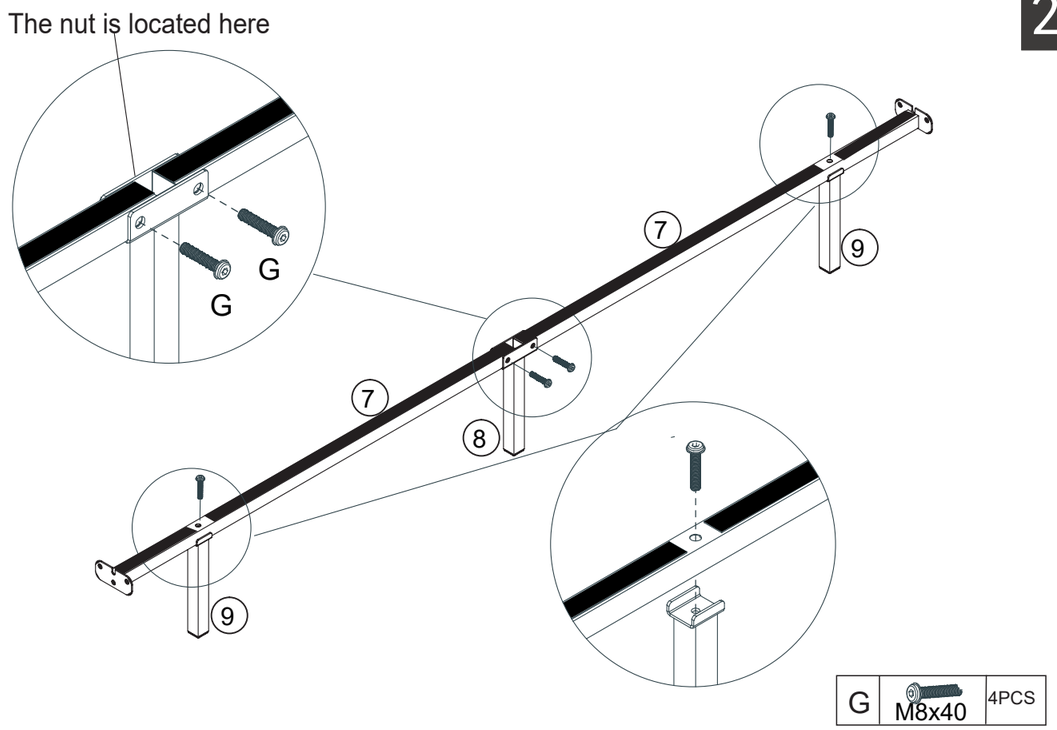
X2

WARNING!

Moving parts can crush or cut. Keep fingers,hands,and feet away to avoid injury

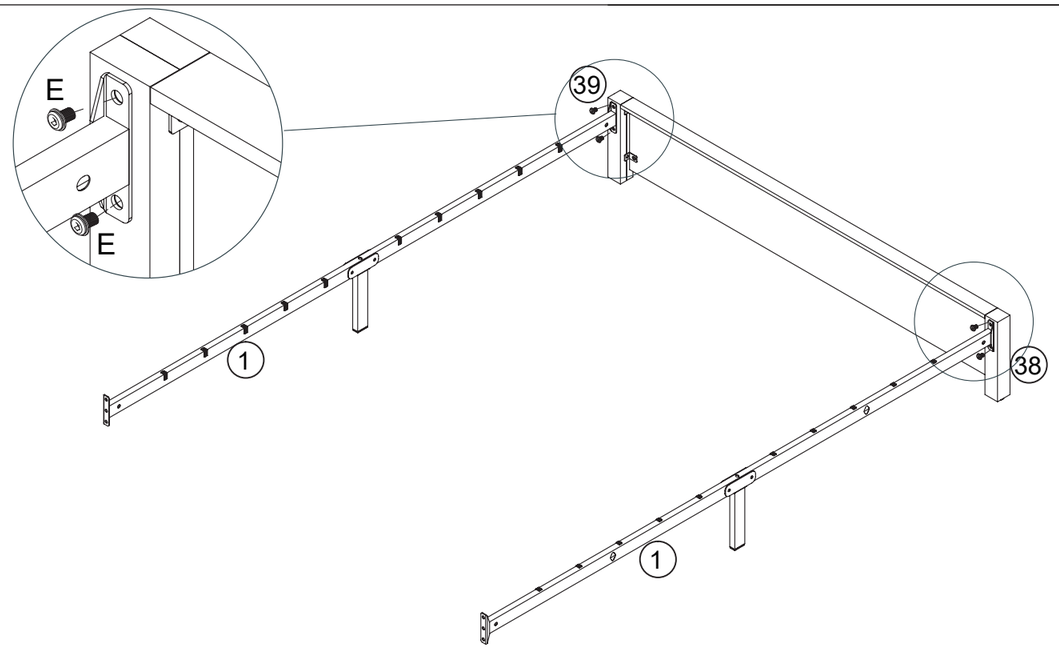


22



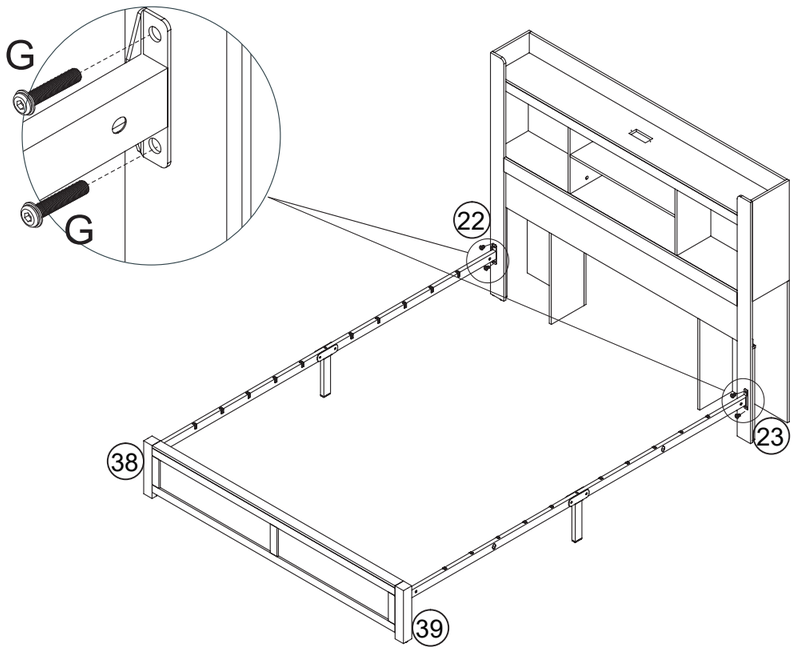
G	M8x40	4PCS

23



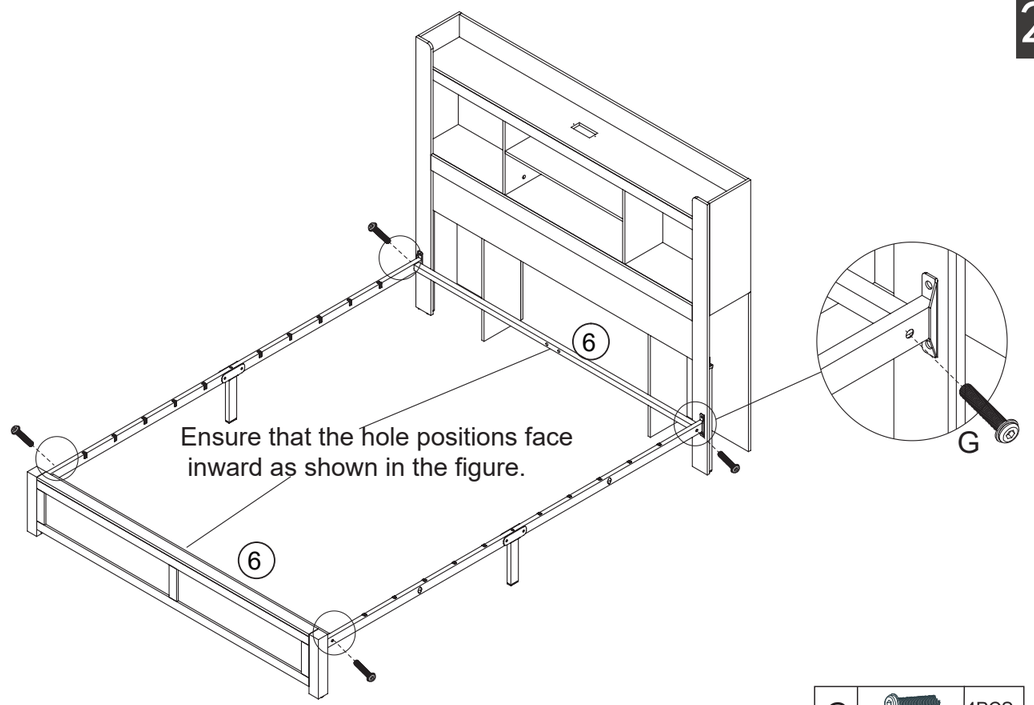
E	M8x18	4PCS

24



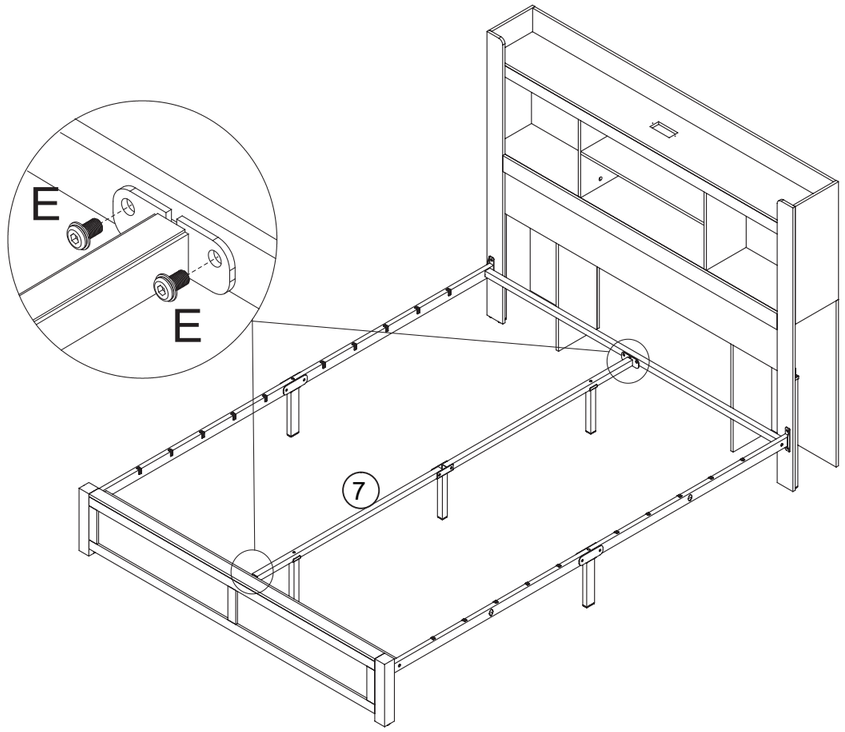
G	M8x40	4PCS

25



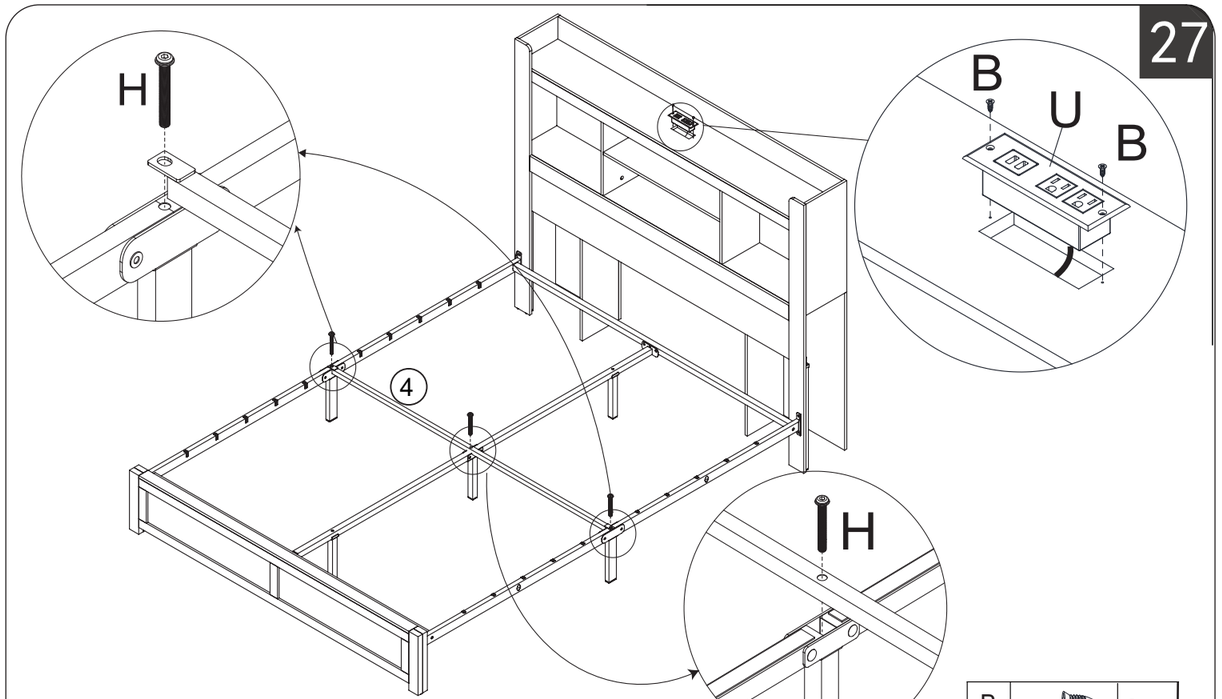
G	M8x40	4PCS

26



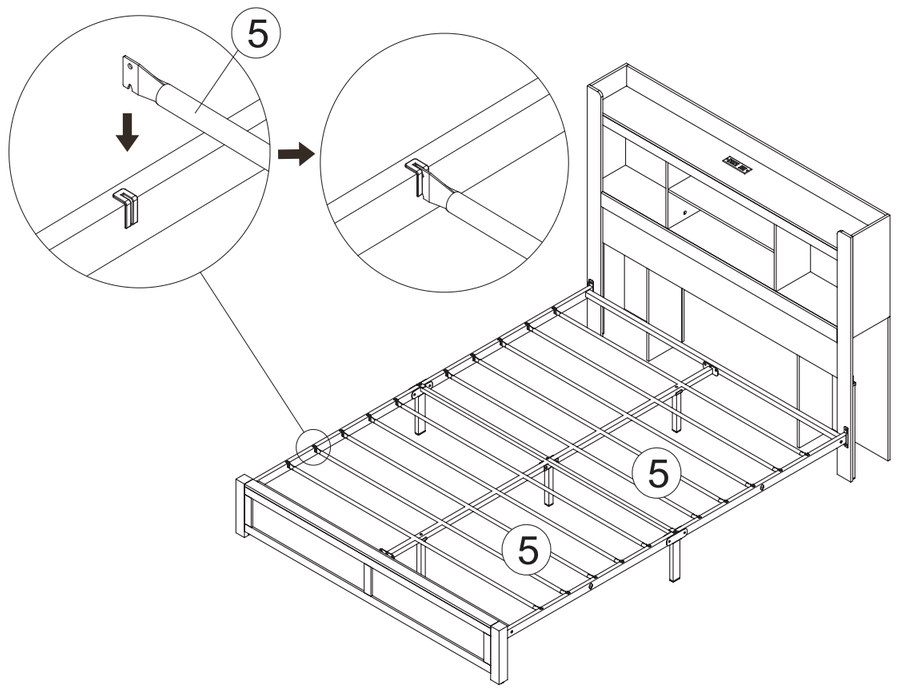
E	M8x18	4PCS

27

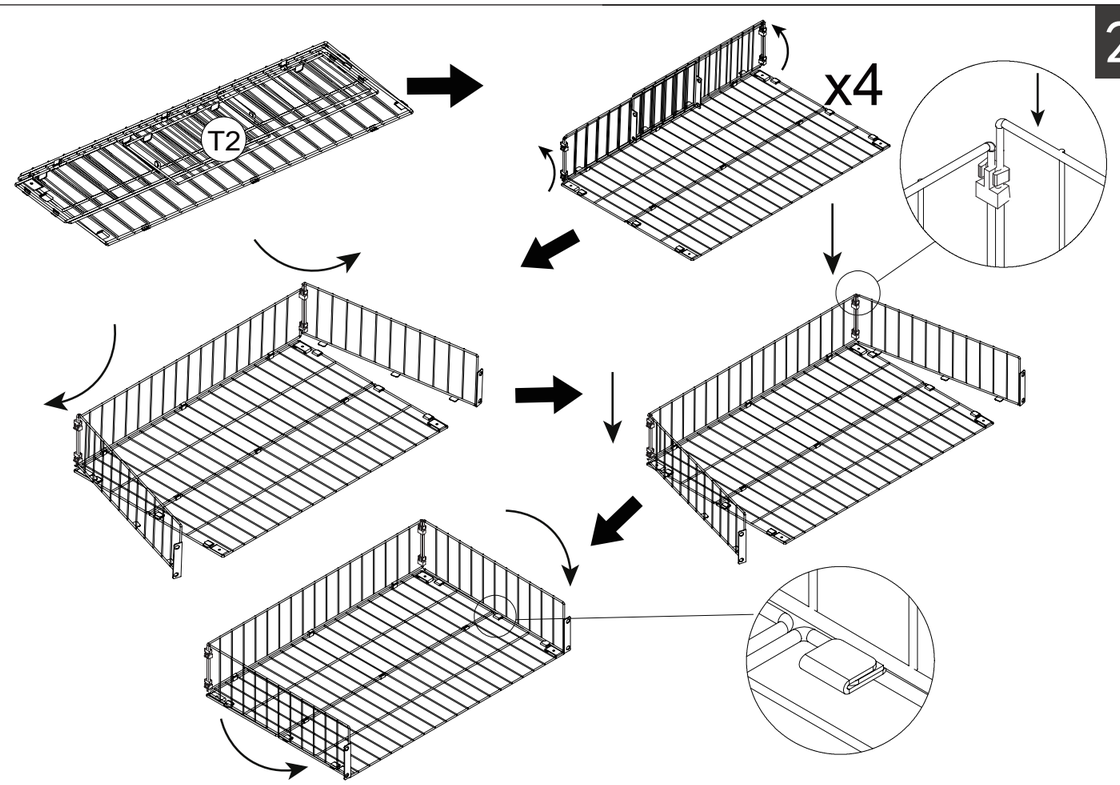


B	ST4. 2x12	2pcs
H	M8x55	3PCS

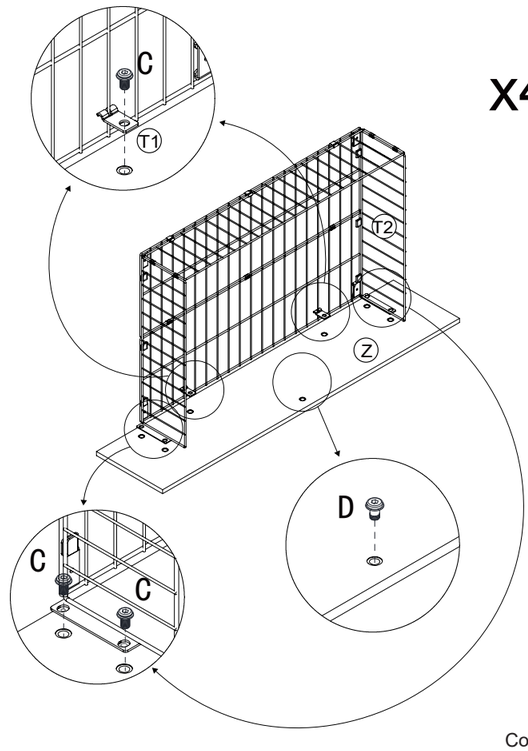
28



29



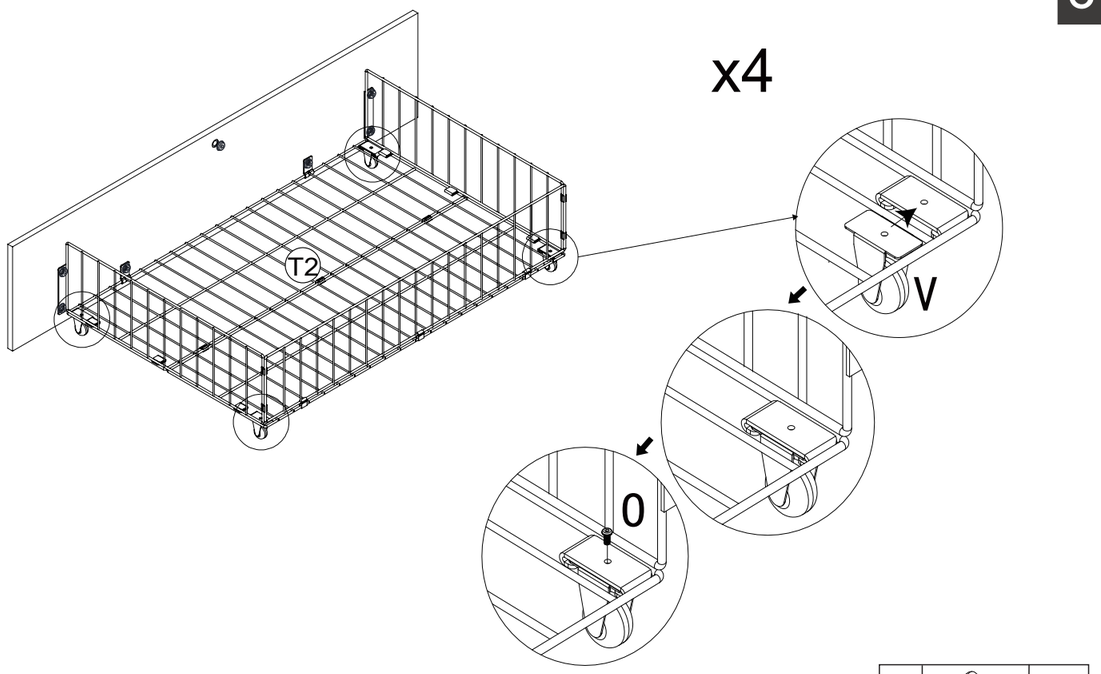
30



C	M8x12	24PCS
D	M8x14	4PCS

Colored Zinc

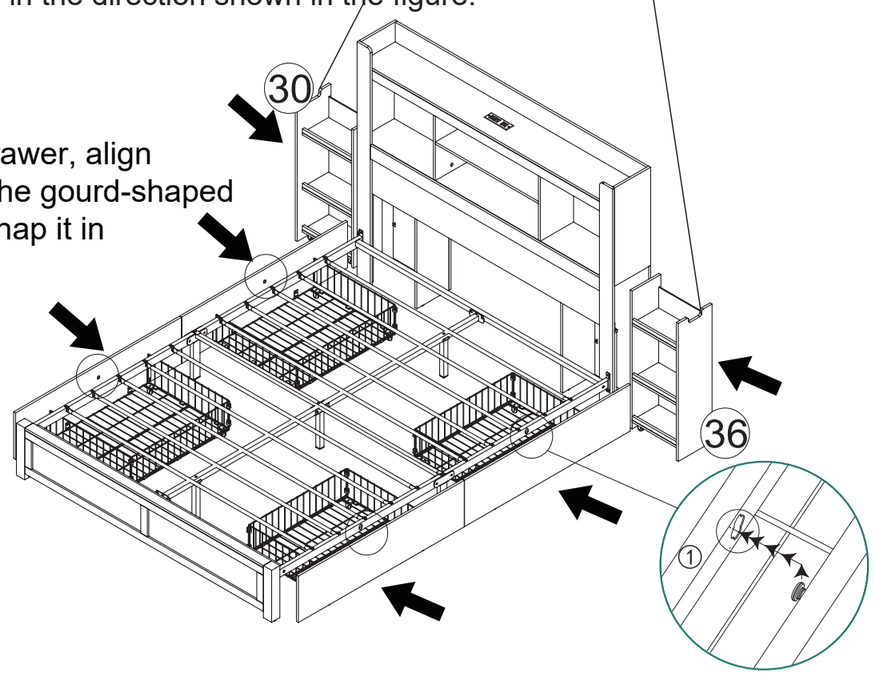
31



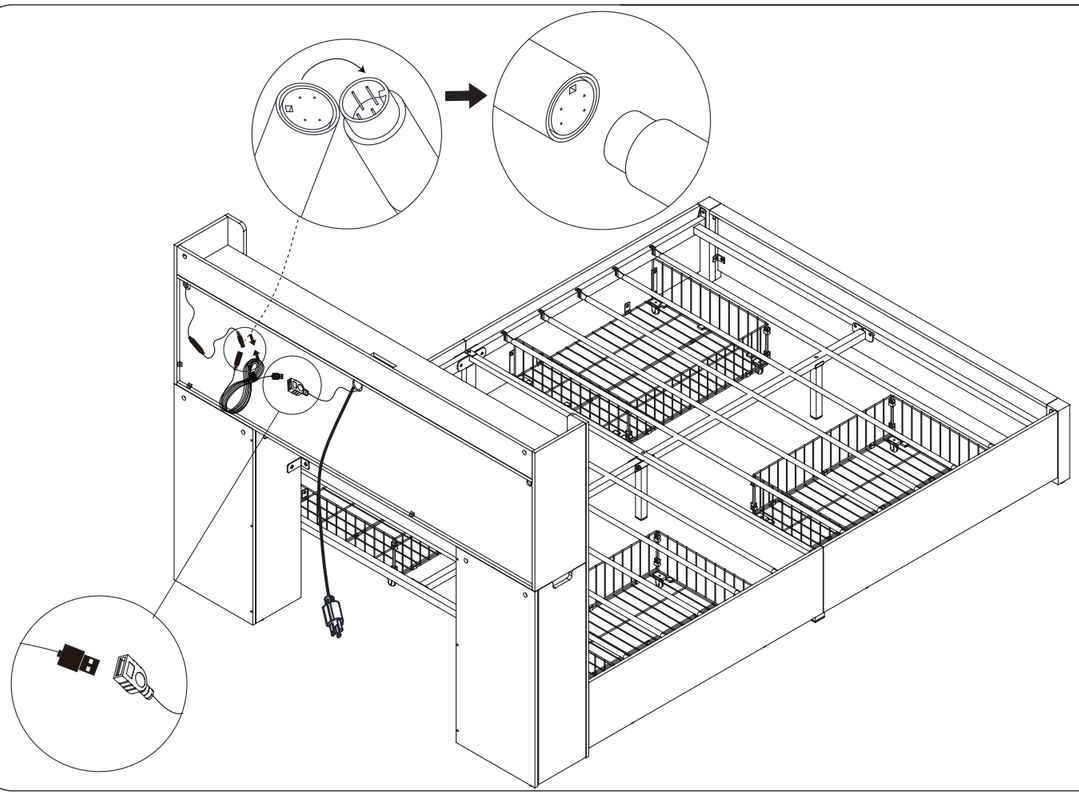
32

Please ensure that the bedside cabinets on both sides of the headboard are positioned in the direction shown in the figure.

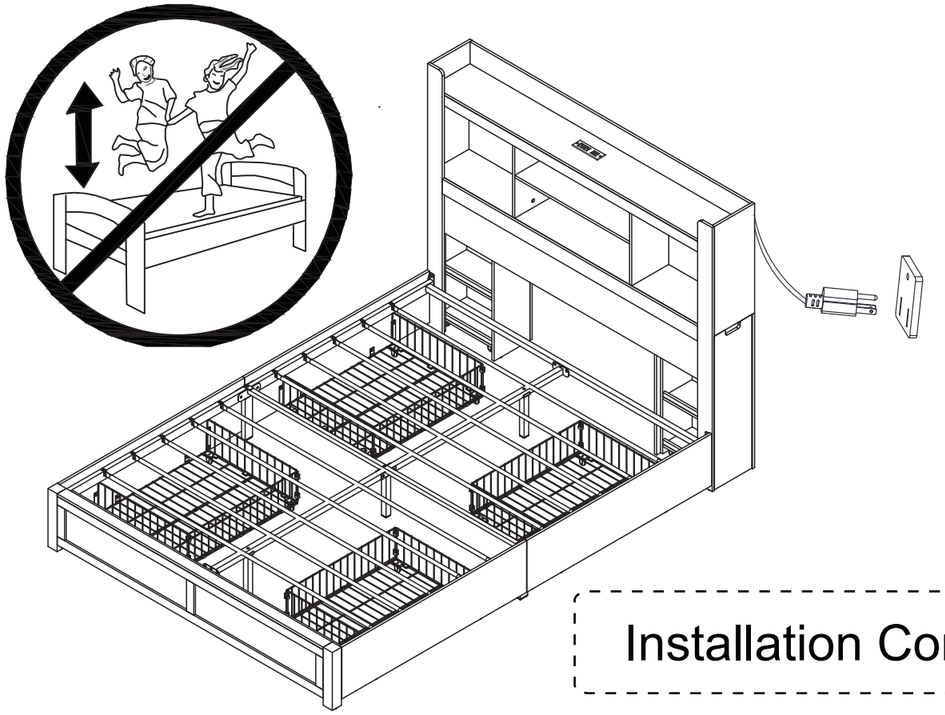
Gently lift the drawer, align the screw with the gourd-shaped hole,and then snap it in



33



34



Installation Complete