UPT-272895
ASSEMBLY INSTRUCTIONS

AX1	BX2	DOOR HANDLE CX2
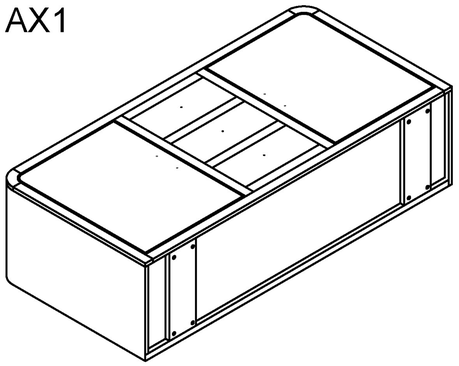	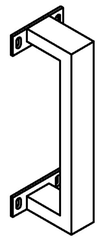	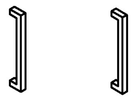

H1X8	H2X8	T	H3X4	S	Extra Hardware
				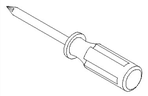	H1-2 pcs H2-2 pcs H3-2 pcs

Note:
1. Please do not tight any bolt unless all bolts are fixed at their respective places.
2. After fixing the bolts tighten them simultaneously.
3. Matching Parts Bolt (example AtoA)
4. Two person assembly required.

1

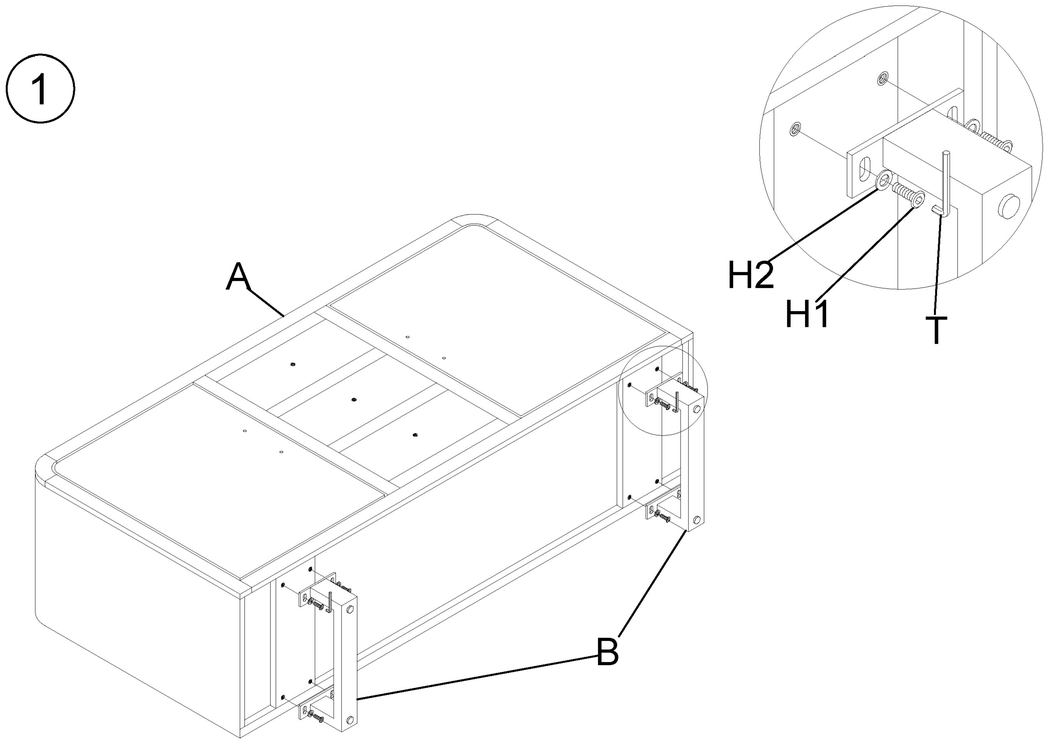
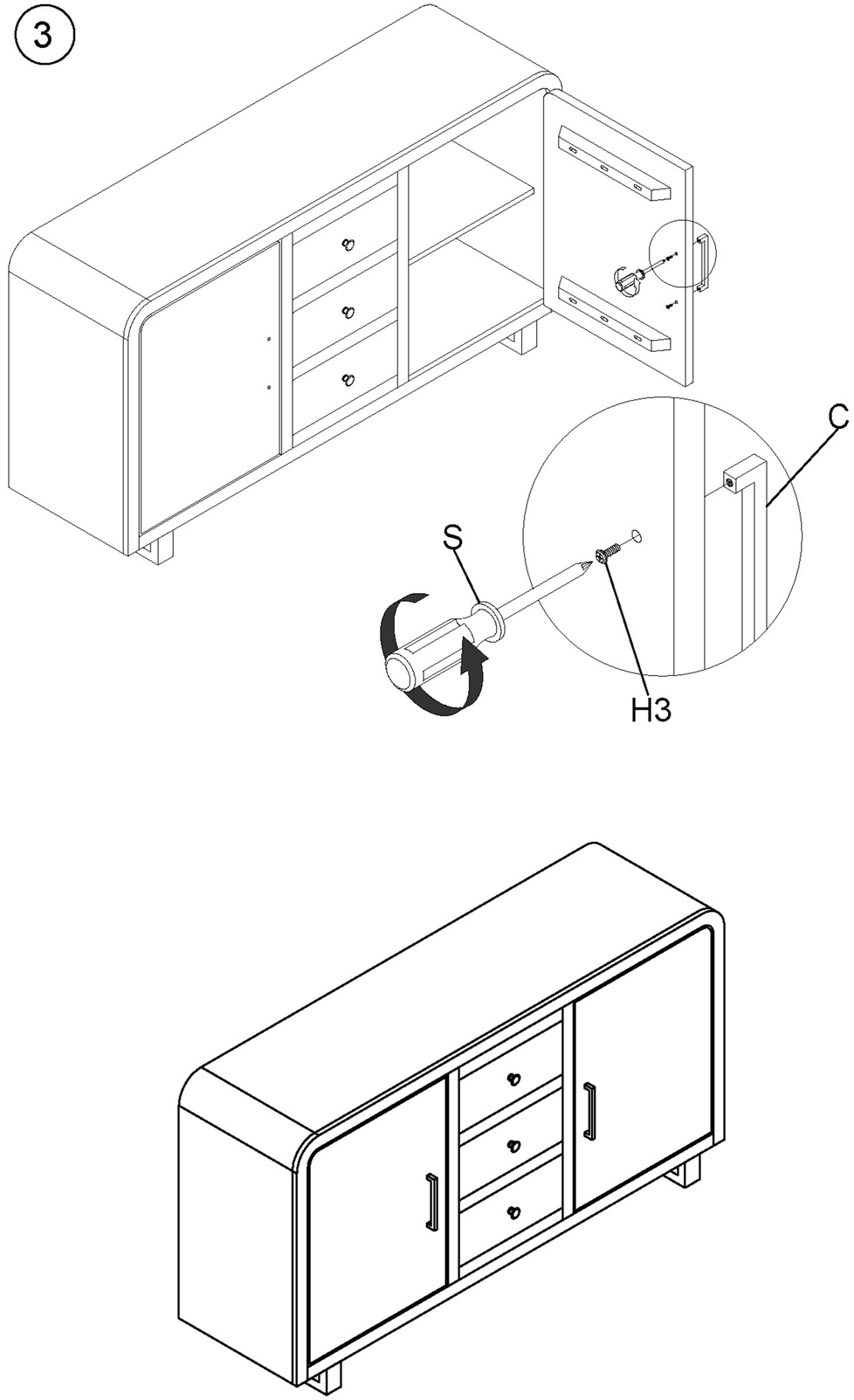
3