HANGING BOOZE RACK

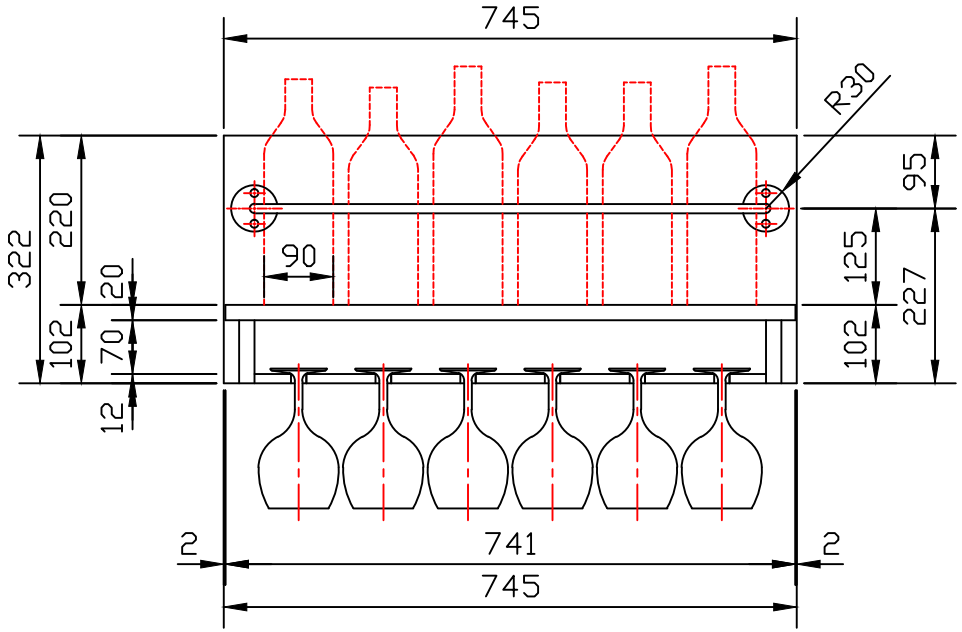

FRONT VIEW

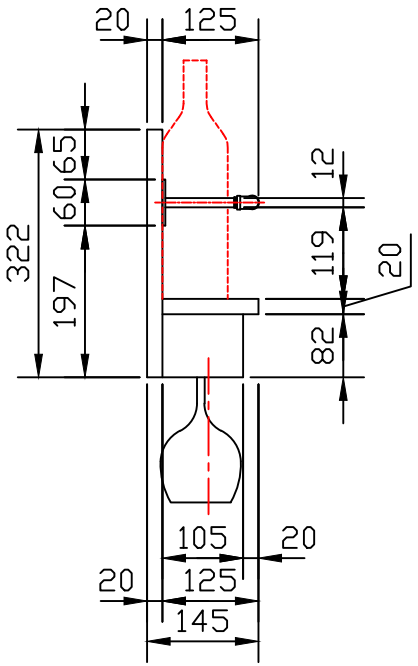

SIDE VIEW

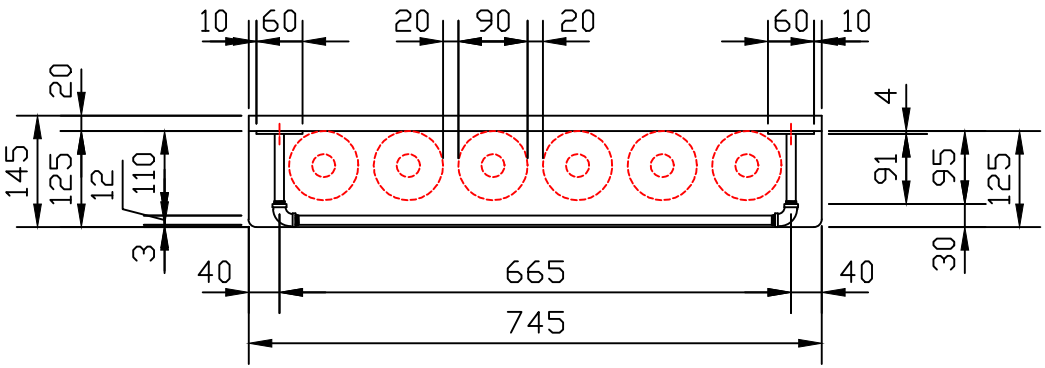

PLAN