Product Manual

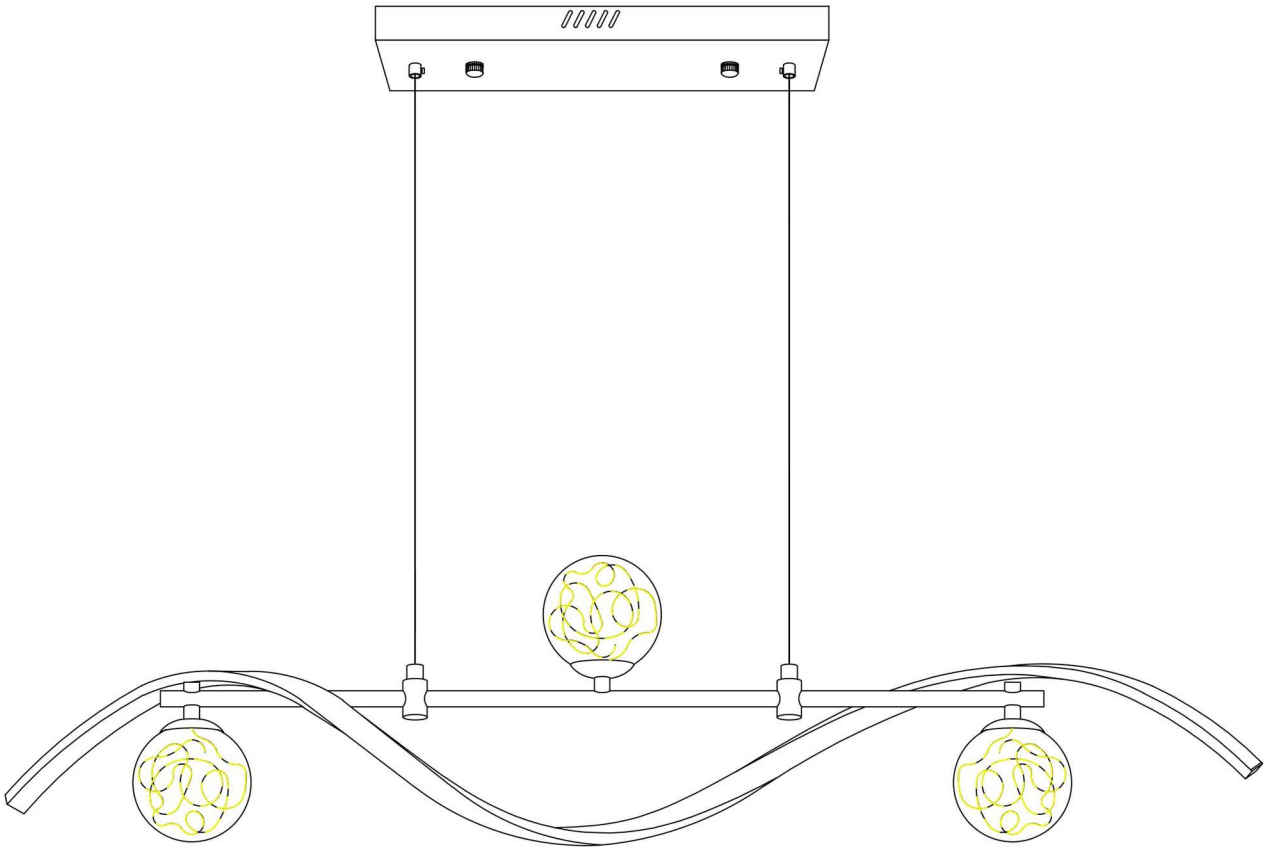

Island Light

Contents

Before Use

Important Safety Instructions..... 03

Warning..... 03

Installation Guide

Assembly Instructions..... 03

Parts List..... 04

Accessories List..... 05

Exploded Views..... 06

Installation Steps..... 07

Operation

Care and Maintenance..... 10

Trouble Shooting..... 10

Important Safety Instructions

BEFORE INSTALLING FIXTURE, MAKE SURE THEPOWER TO THE CIRCUIT IS TURNED OFF AT THE MAIN FUSE BOX / CIRCUIT BREAKERUTILITY BOX.

· These instructions are provided for your safety. It is very important that they are read carefully and completely before beginning the assembly and installation of this lighting fixture.

· We strongly recommend that a professional electrician install all direct wire fixtures.

· The lighting fixture is meant for indoor use.**DRY LOCATION ONLY**

· It must be connected only to 3-wire, single-phase electrical supply systems.

(provided with ground wire or equivalent protection system)

For your safety, it is strongly recommended that two people install the lighting fixture.

Warning

To reduce the risk of fire, electrical shock or personal injury, always turn off light fixture and allow it to cool prior to replacing light bulb.

Do not touch bulb when fixture is turned on. Do not look directly at lit bulb.

Keep flammable materials away from lit bulb.

Assembly Instructions

· Read these instructions carefully and keep for future reference. Refer to parts inventory for guidance, and ensure you have all pieces before starting.

· When assembling place all parts on a soft, clean, and flatsurface such as a carpet to prevent scratches.



Do not discard any contents until after assembly is complete to avoid accidentally discarding small parts or hardware.

TOOLS YOU MAY NEED

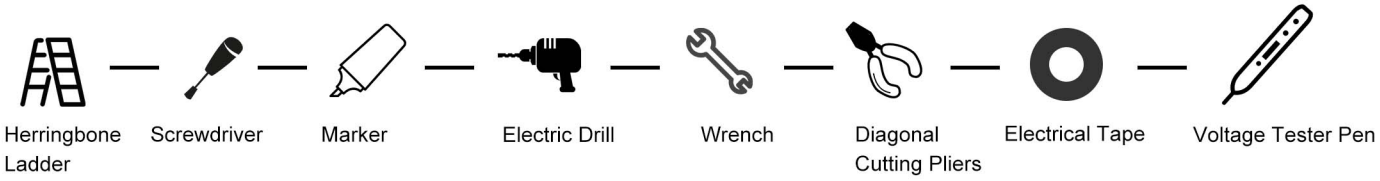

Note: It is required to be sure as follows before installation

· The light bulbs shall be tested lit before bulbs are assembled and lamp shades are installed.

· The electric wire length needs to be determined in advance.

Parts List

Ax1



Bx1

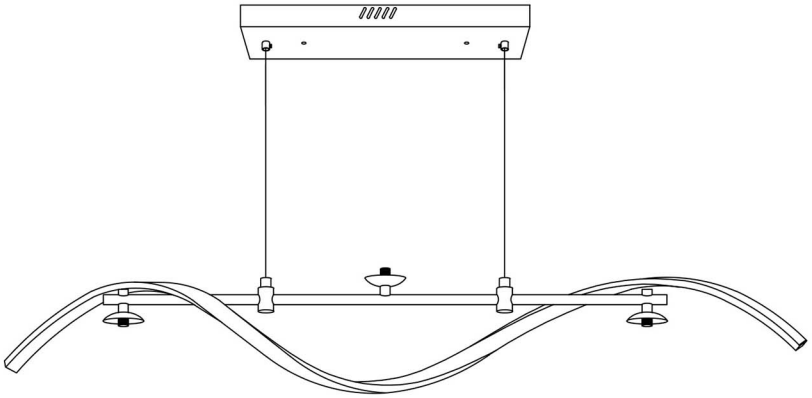

Cx1

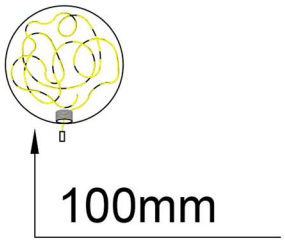

Accessories List

Ex2

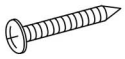

M4*30mm

Fx2



M4*30mm

Gx2



Exploded Views

EXPLODED

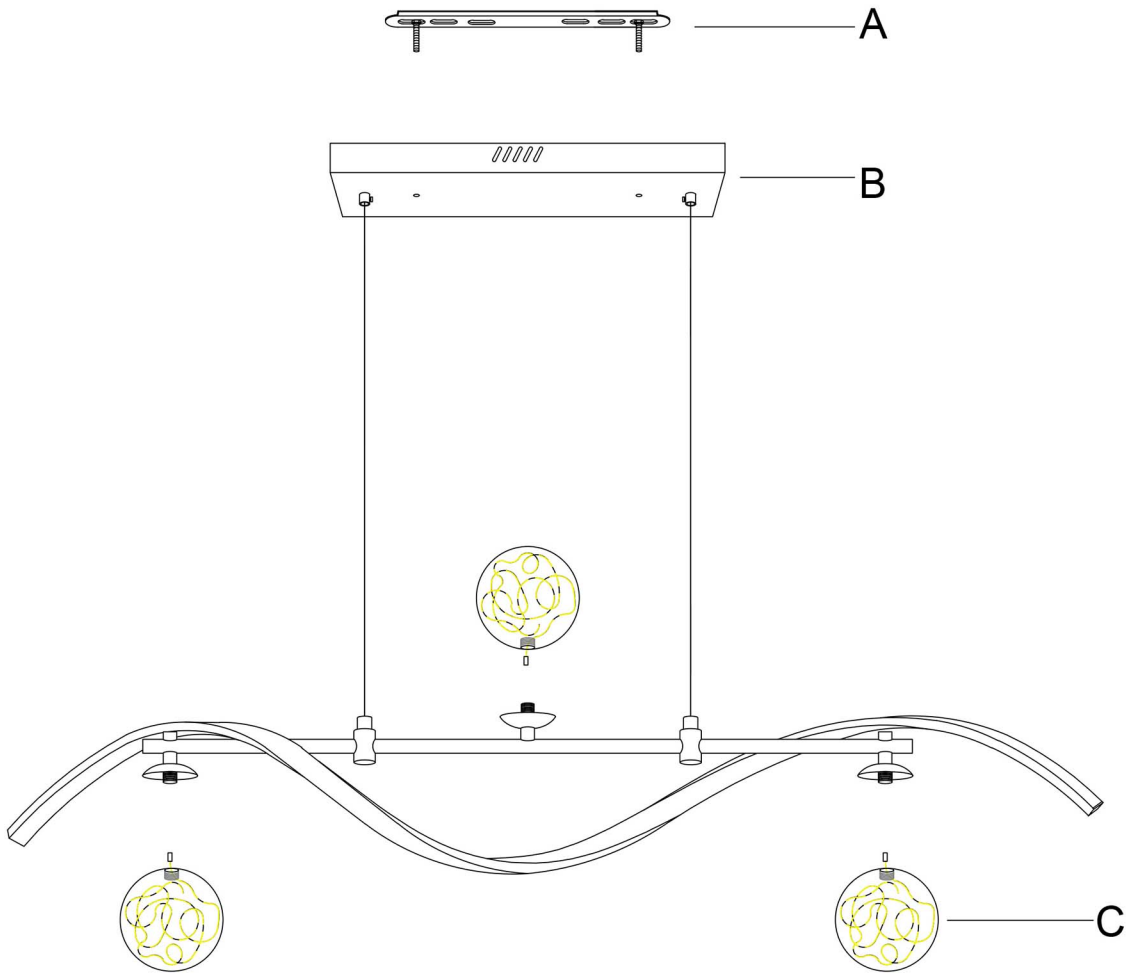

COMPLETE

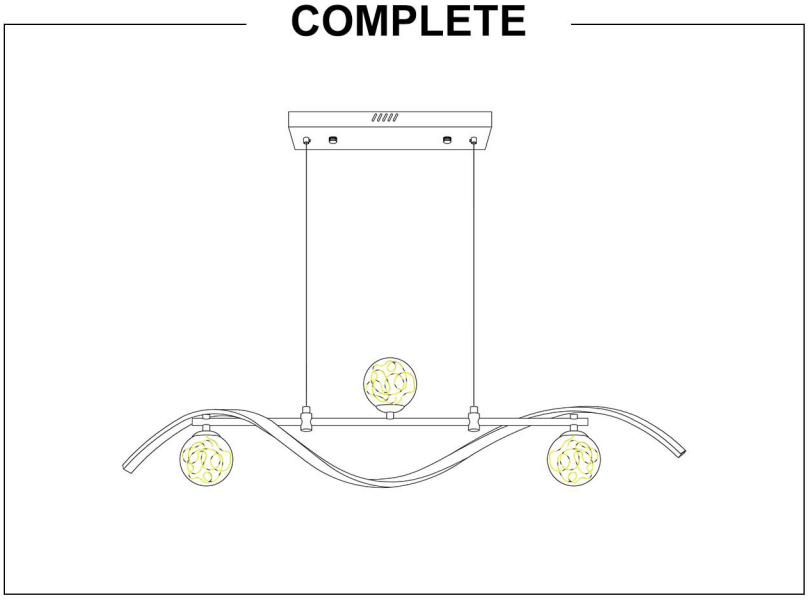

Installation Steps

Step 1

E 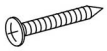 x2

F  x2

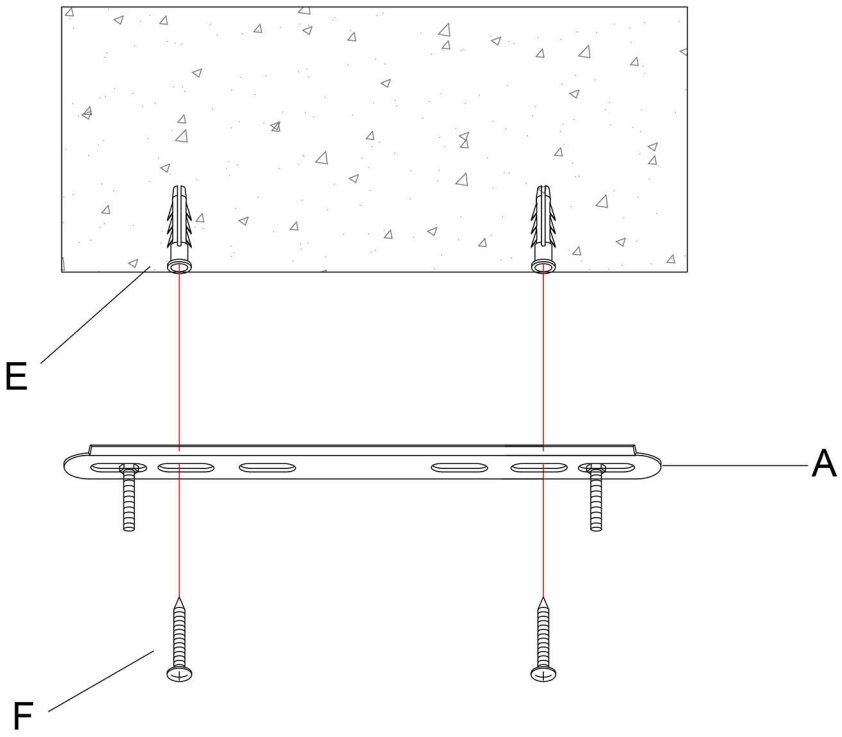

Step 2

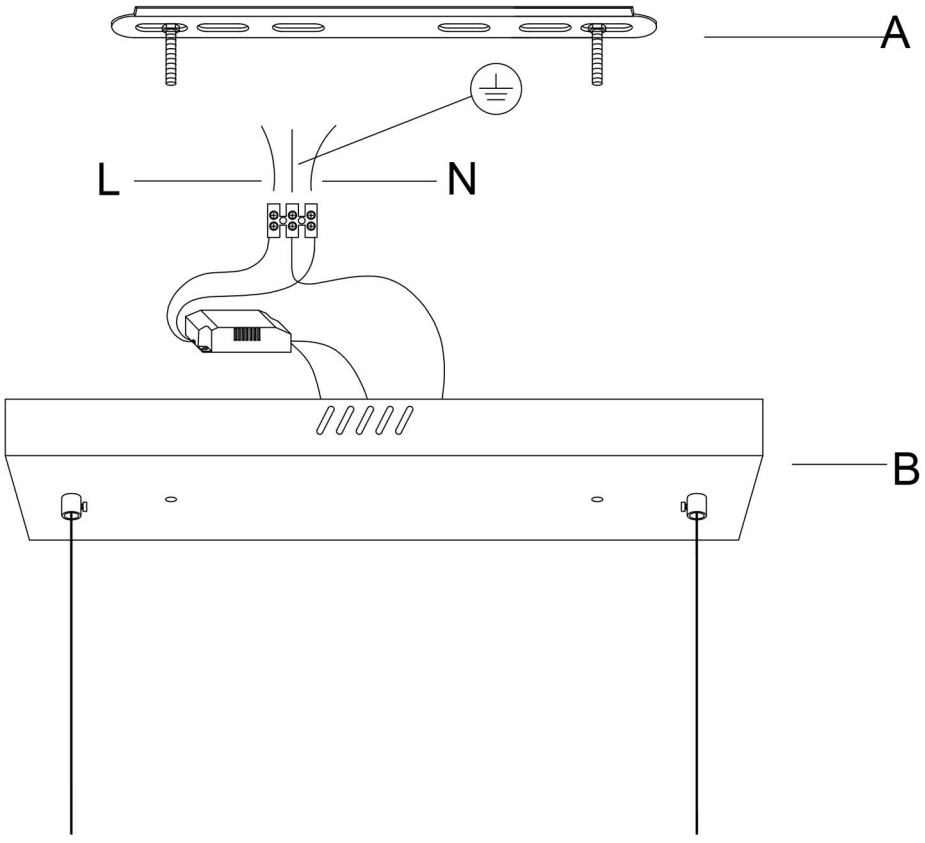

Installation Steps

Step 3

G  x2

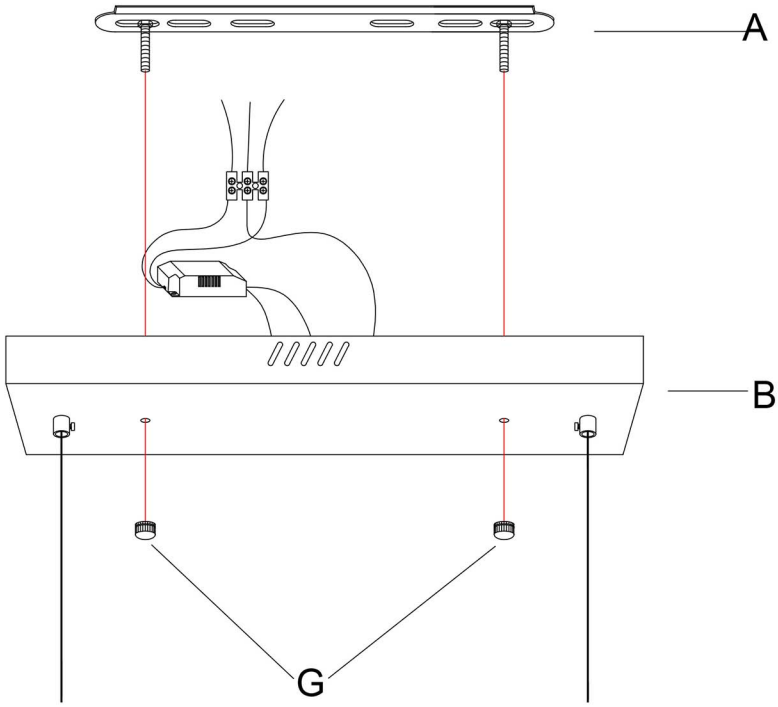

Step 4

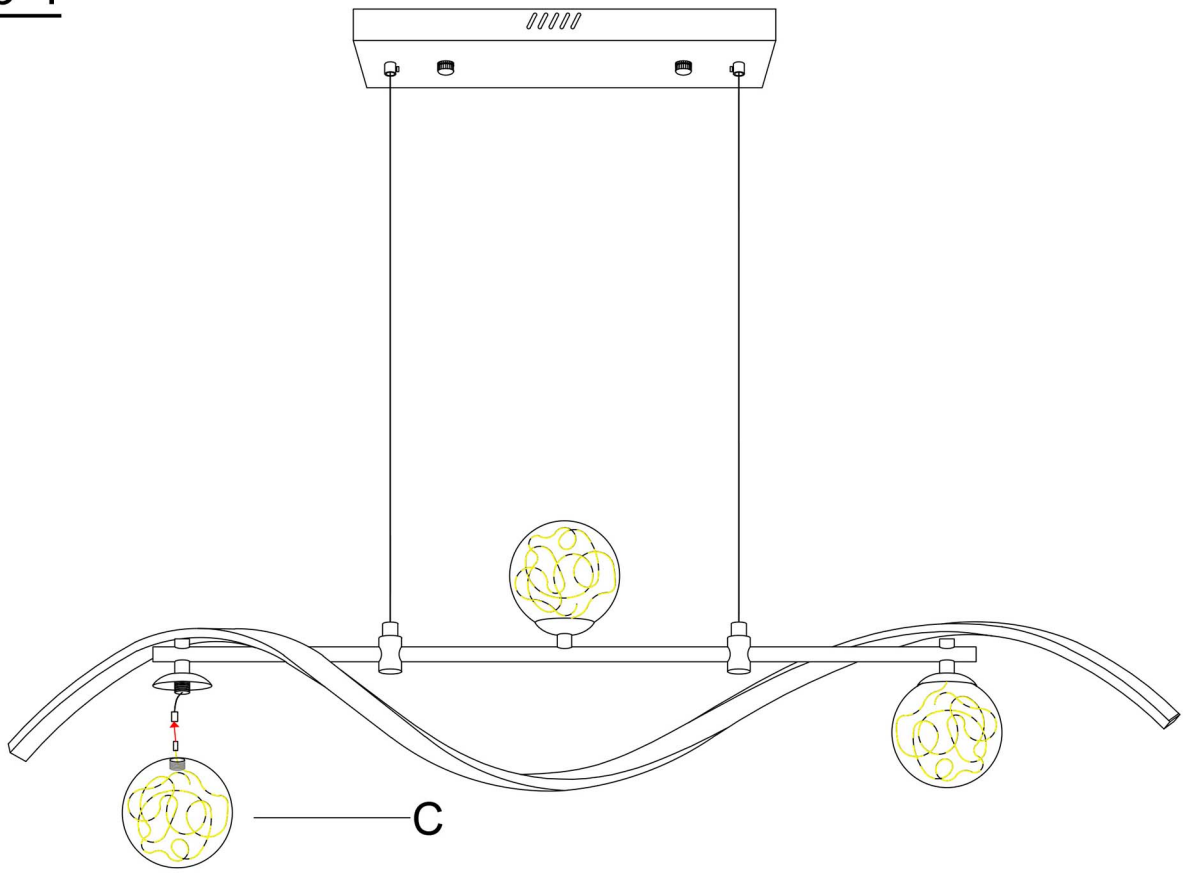

12 Key Remote Control Manual is successful

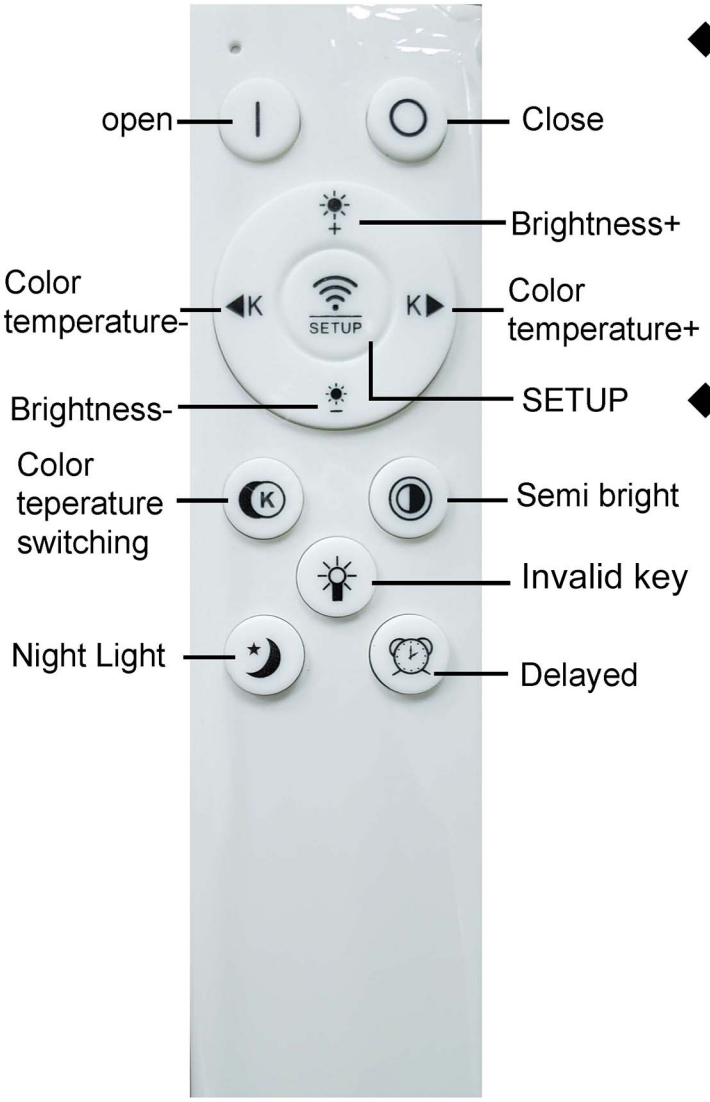

◆ Pairing with lights
Press and hold the "SETUP" button on the remote control for 3 seconds, and the light flashes 3 times. Pairing

◆ Delete pairing.
Press and hold the "on" button on the remote control for 3 seconds, and the light will flash 3 times to delete pairing

Care and Maintenance

WARNING: Before you perform any cleaning or maintenance work, turn off the electricity at the main circuit breaker panel.

· Wipe the fixture with a damp, soft cloth.

· Do not use any abrasive cleaners or cleaners that contain alcohol.

· When replacing bulbs, use 60-watt MAX for E26/27 bulb and E12/14 bulb, 40-watt MAX for G9 bulb, 20-watt MAX for G4 bulb.

Troubleshooting

Problem	Possible Cause	Solution
The light will not turn on.	A bulb is burned out.	Replace the bulb.
	The power is off.	Ensure the power supply is on.
	There is a faulty wire connection.	Check the wiring. Contact a qualified and licensed electrician if you are not capable to solve wiring problems.
	There is a faulty switch.	Test or replace the switch.
The fuse blows or the circuit breaker trips when the light is turned on.	There are crossed wires or the power wire is grounding out.	Discontinue use of the fixture. Check the wire connections or contact a qualified electrician.
Strobe	Drive Failure	Contact our after-sales service, may need to replace the driver.
	Wiring Error	Rewire according to the manual.
	Light Source Failure	Replace the light source, if the problem can not be ruled out, please contact customer service.
Abnormal noise	Drive Failure	Contact our after-sales service, may need to replace the driver.