CollaredEagle

Dressing table - VD004

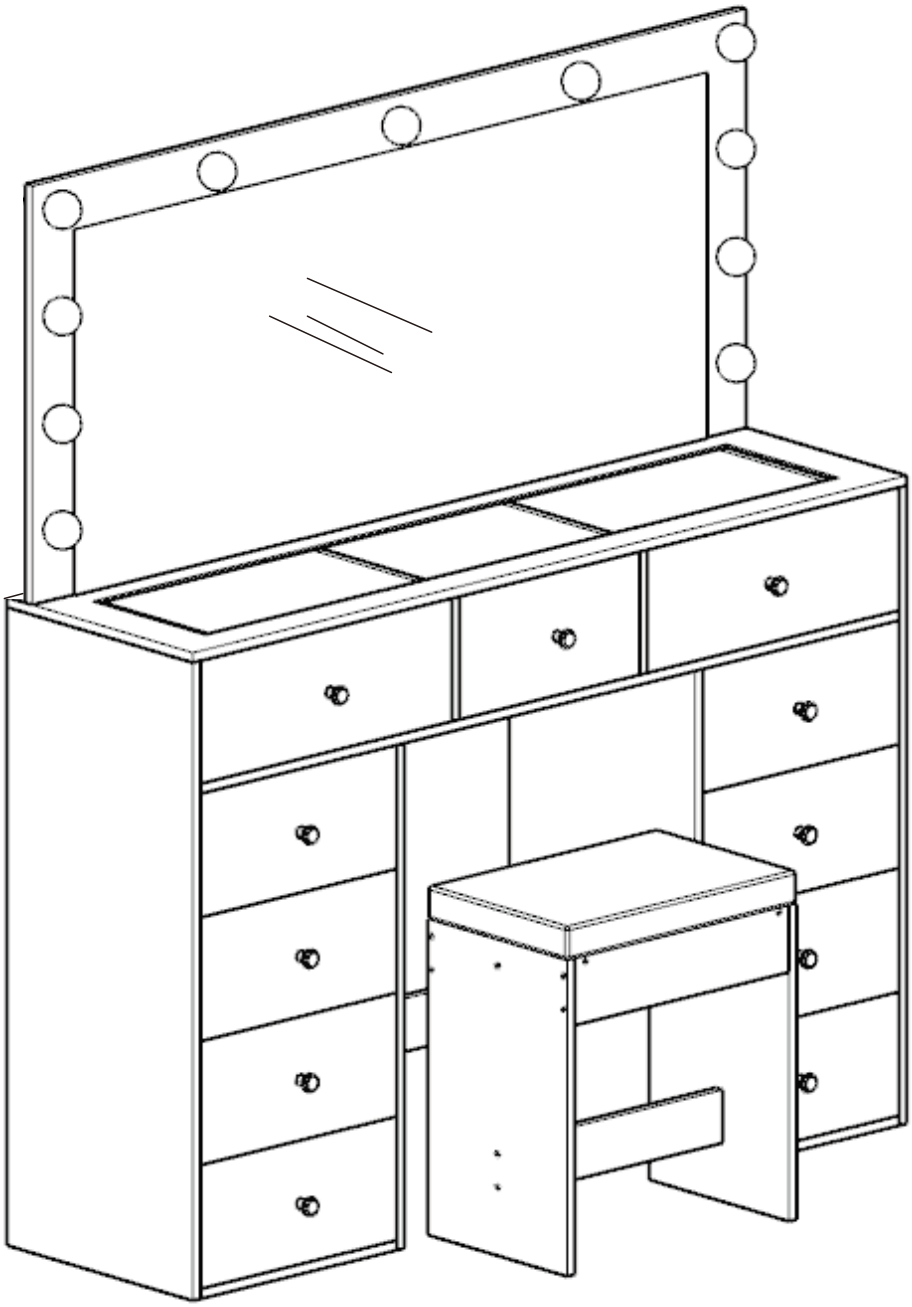

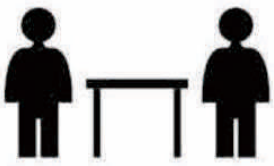

Suggestion: To make the installation process easier and faster, we recommend that two people work together to install the **Dressing table**

Helpful Hints

1.We recommend two people to assemble the product easier and faster.

2. Please DO NOT tighten the screws deeply during assembling avoiding that metal frame can be bent and plank will crack.

3.We recommend that all screws should not be tightened over during assembling to make it easy to adjust.When it is adjusted to proper stationall screws should be tightened.

4.Caution: If using a power drill or power screwdriver for screwing, please be aware of to slow down and stop when screw is tight. Failure to do so may result in stripping the screw.

Customer Service

As this item contains many parts, please read the installation instruction carefully before installation and complete the installation with the cooperation of your partner. Please use tools properly and carefully. If you have any questions about the product and installation, please contact us freely. **CollaredEagle@163.com**

EXPLODED

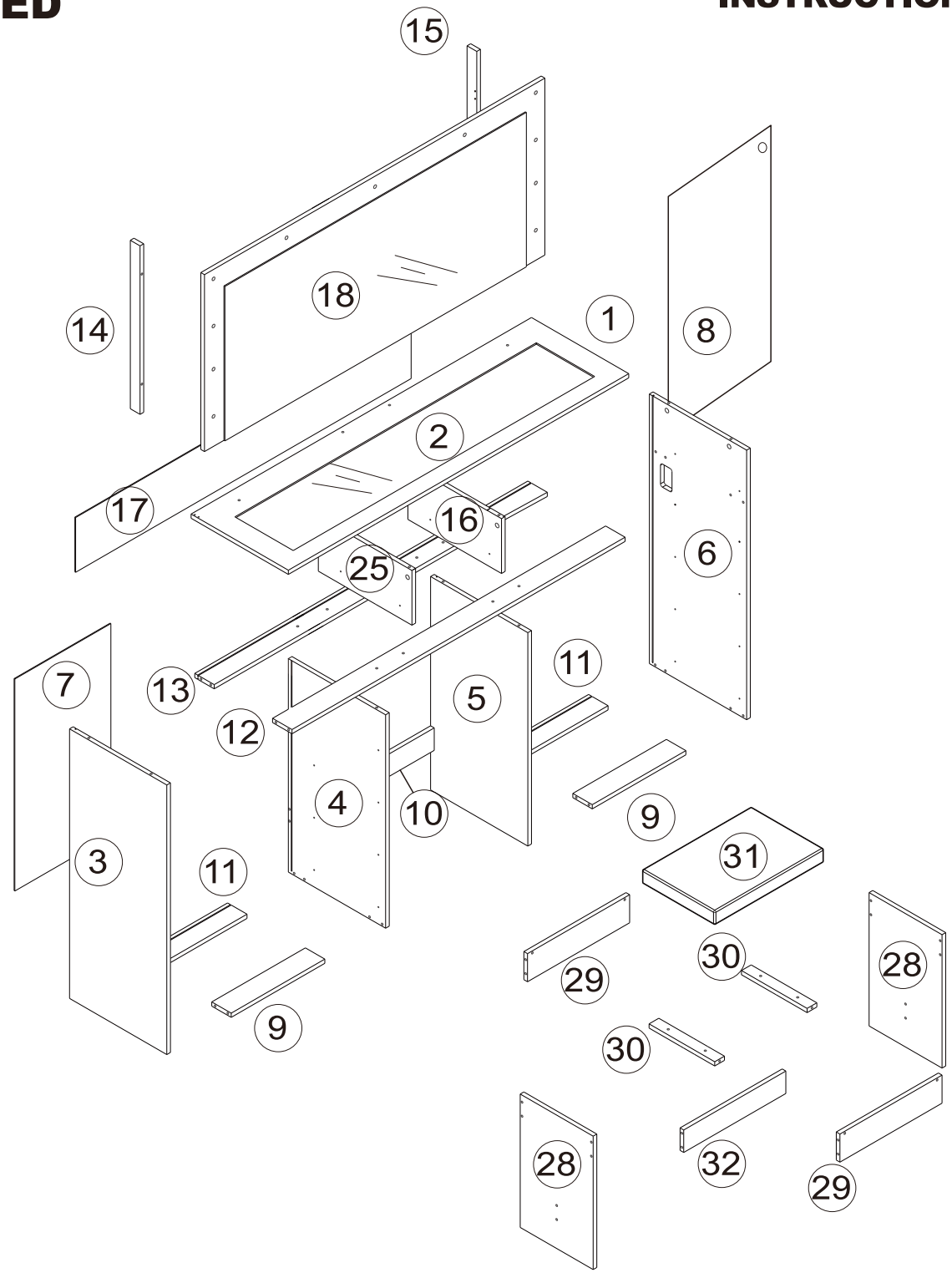
15
18
14
1
8
2
17
16
6
25
7
13
11
5
12
4
10
9
3
11
31
30
29
28
9
30
28
32
29

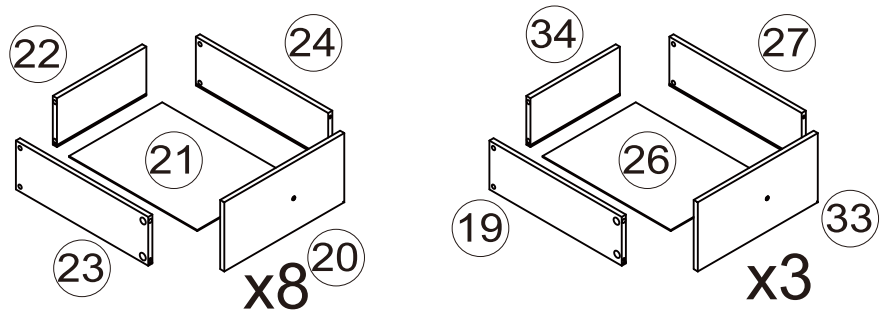
22
24
21
23
20
x8
34
27
26
19
33
x3

Accessories list

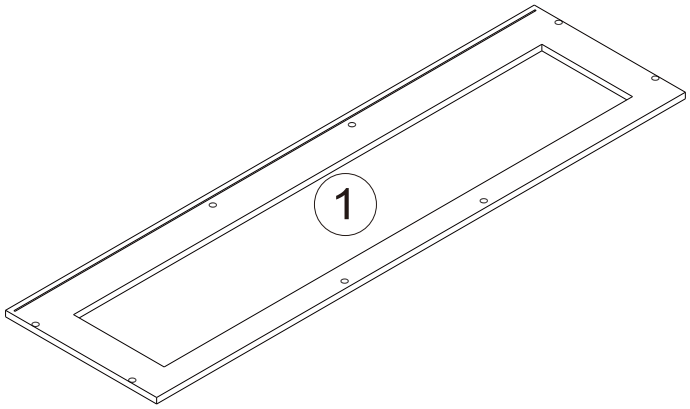

Qty:1

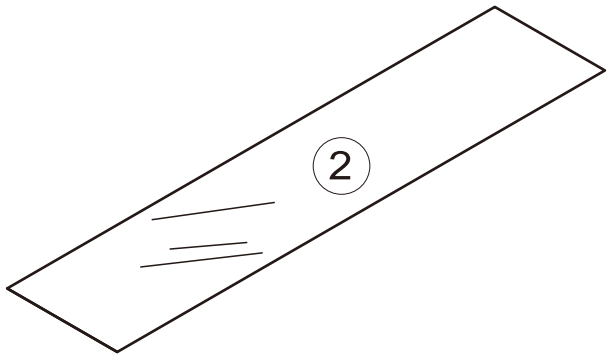

Qty:1

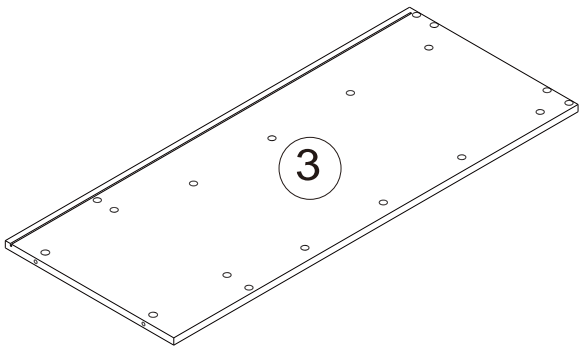

Qty:1

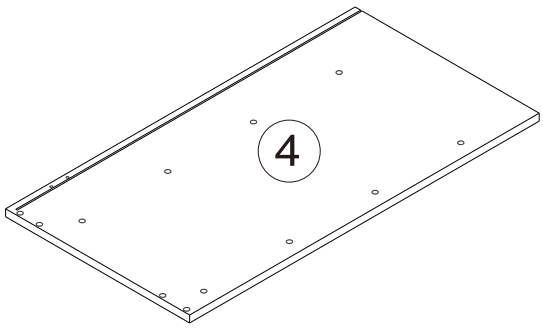

Qty:1

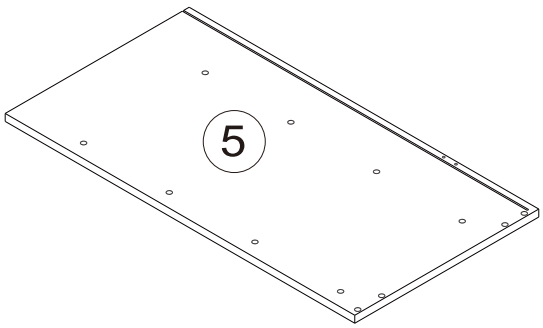

Qty:1

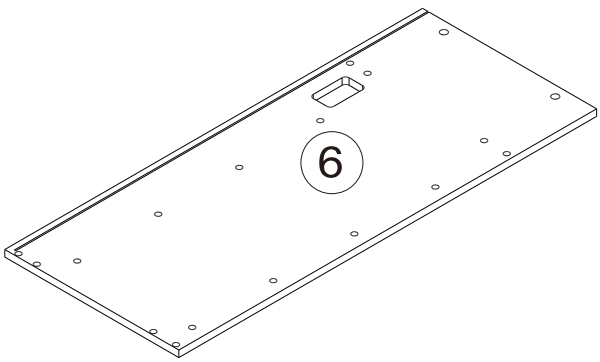

Qty:1

In many cases, we include additional hardware. Therefore, after following the assembly instructions, do not worry if there are any extra parts - they are provided as a precautionary measure for convenience.

Accessories list

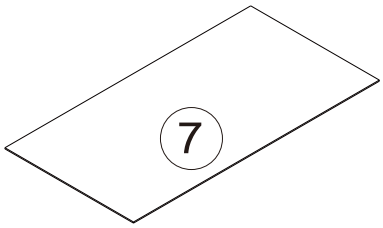

Qty:1

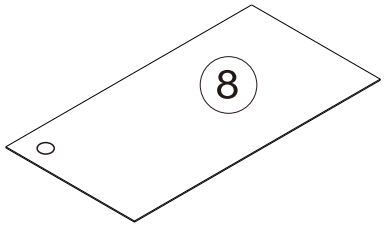

Qty:1

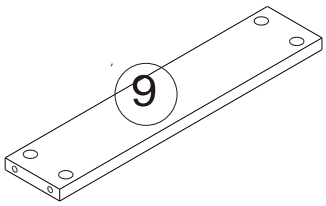

Qty:2

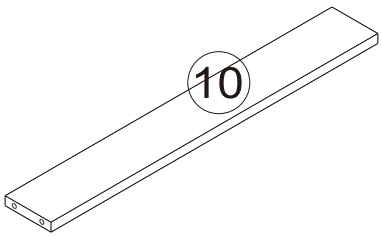

Qty:1

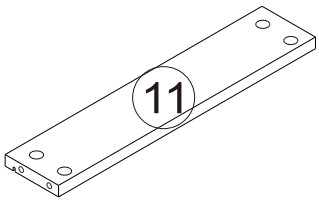

Qty:2

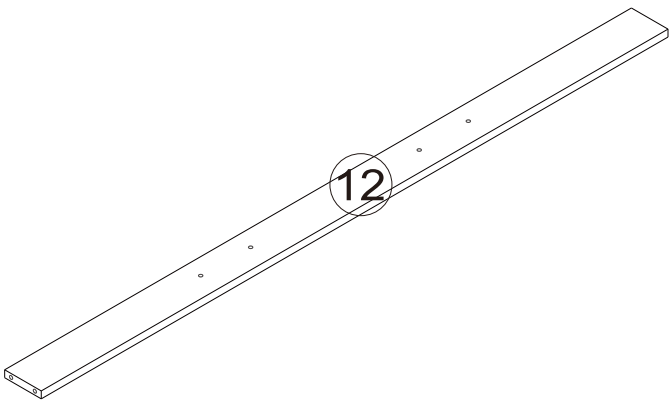

Qty:1

In many cases, we include additional hardware. Therefore, after following the assembly instructions, do not worry if there are any extra parts - they are provided as a precautionary measure for convenience.

Accessories list

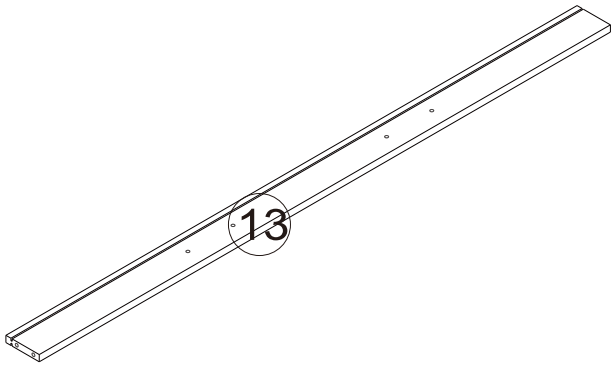

Qty:1

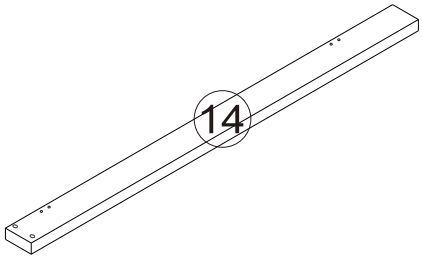

Qty:1

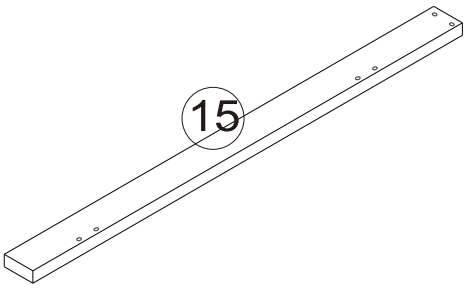

Qty:1

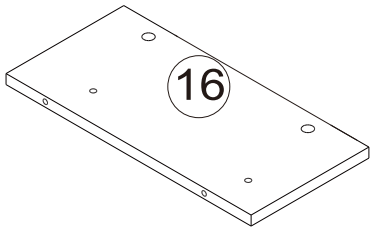

Qty:1

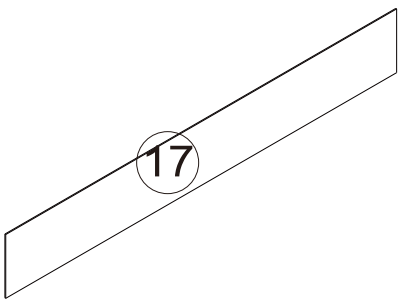

Qty:1

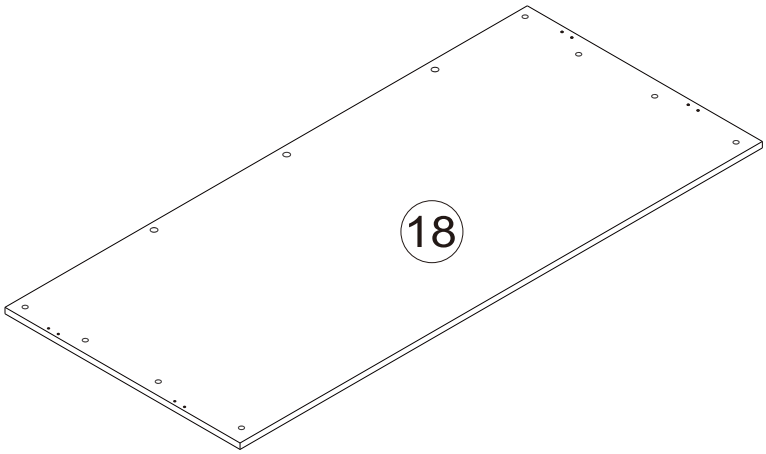

Qty:1

In many cases, we include additional hardware. Therefore, after following the assembly instructions, do not worry if there are any extra parts - they are provided as a precautionary measure for convenience.

Accessories list

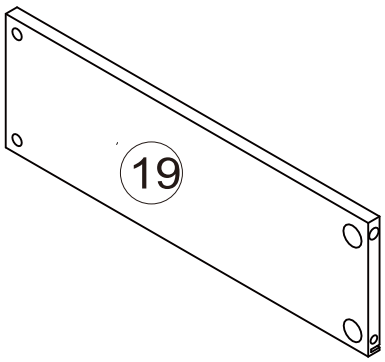

Qty:3

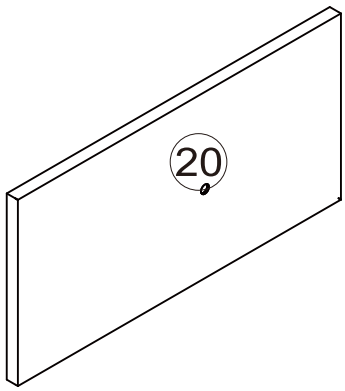

Qty:8

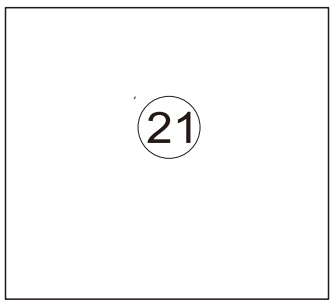

Qty:8

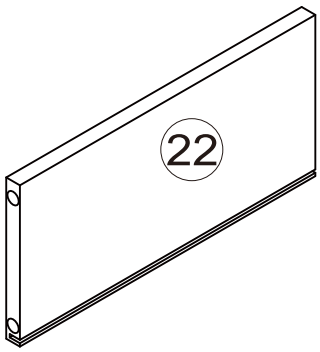

Qty:8

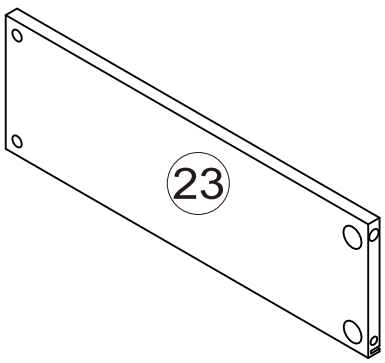

Qty:8

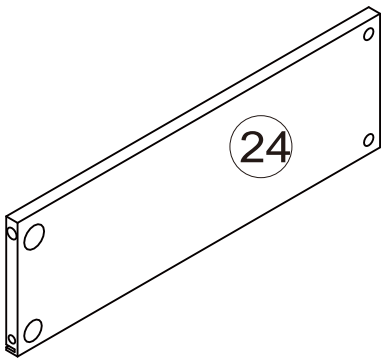

Qty:8

In many cases, we include additional hardware. Therefore, after following the assembly instructions, do not worry if there are any extra parts - they are provided as a precautionary measure for convenience.

Accessories list

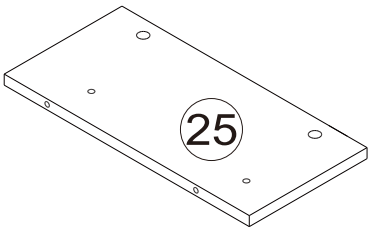

Qty:1

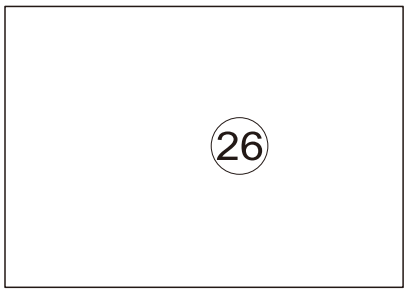

Qty:3

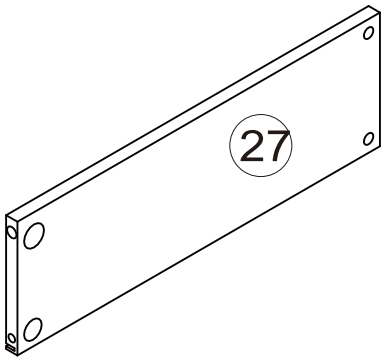

Qty:3

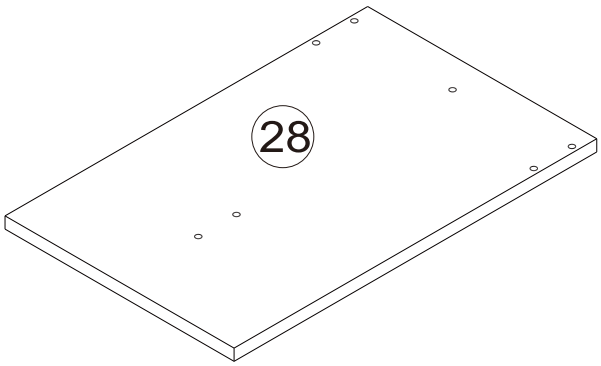

Qty:2

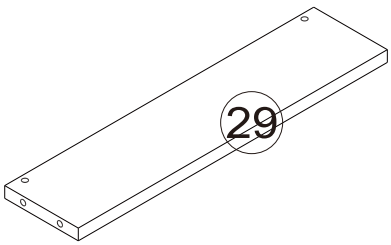

Qty:2

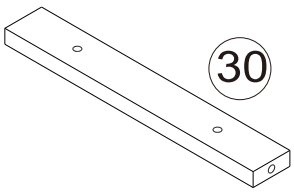

Qty:2

In many cases, we include additional hardware. Therefore, after following the assembly instructions, do not worry if there are any extra parts - they are provided as a precautionary measure for convenience.

Accessories list

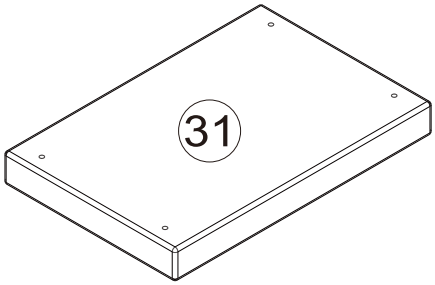

Qty:1

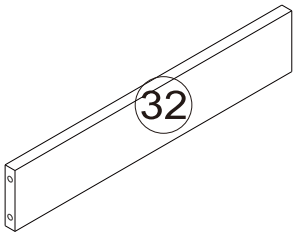

Qty:1

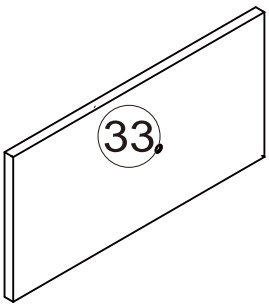

Qty:3

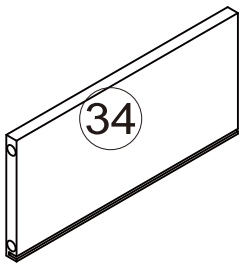

Qty:3

In many cases, we include additional hardware. Therefore, after following the assembly instructions, do not worry if there are any extra parts - they are provided as a precautionary measure for convenience.

Accessories list

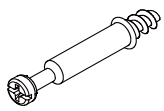

X 76+5

A	Ø6.5X35mm

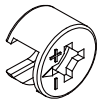

X 76+5

B	Ø15X9.5mm

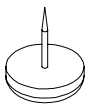

X 12

C	

X11

X 11

D	Ø4X20mm

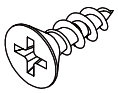

X 88+3

E	Ø3X12mm

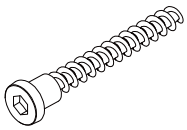

X 44+3

F	Ø5X30mm

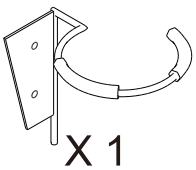

X 1

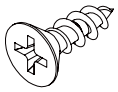

X 2

G	Ø4X14mm

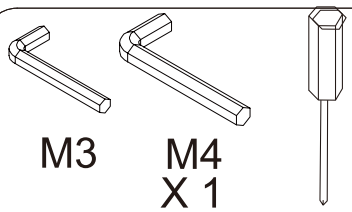

M3 M4

X 1

H	

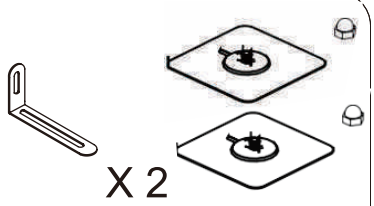

X 2

I	

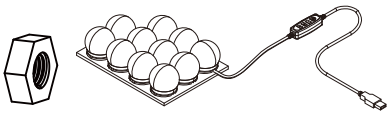

X 1

J	

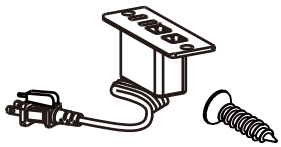

X 1 X 2

K	Ø3X12mm

X 8

L	Ø3X12mm

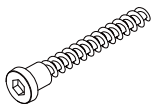

X 28+1

M	Ø7X40mm

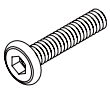

X 4

N	Ø6X25mm

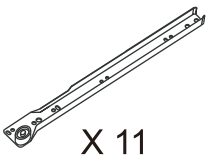

X 11

CL	300mm

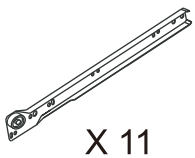

X 11

CR	300mm

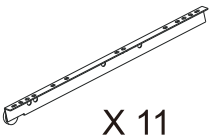

X 11

DL	300mm

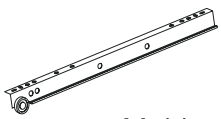

X 11

DR	300mm

X 24

X 6

O	Ø4X12mm

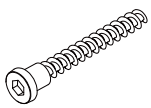

X 4

P.	Ø5X40mm

In many cases, we include additional hardware. Therefore, after following the assembly instructions, do not worry if there are any extra parts - they are provided as a precautionary measure for convenience.

step 1

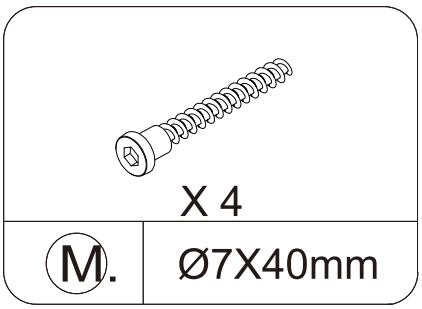

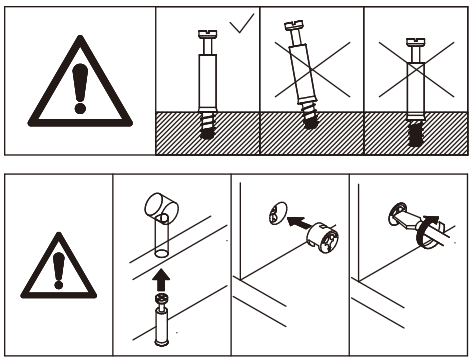

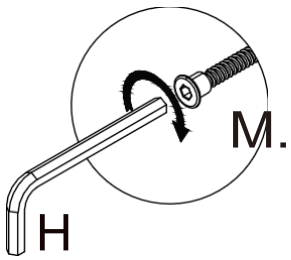

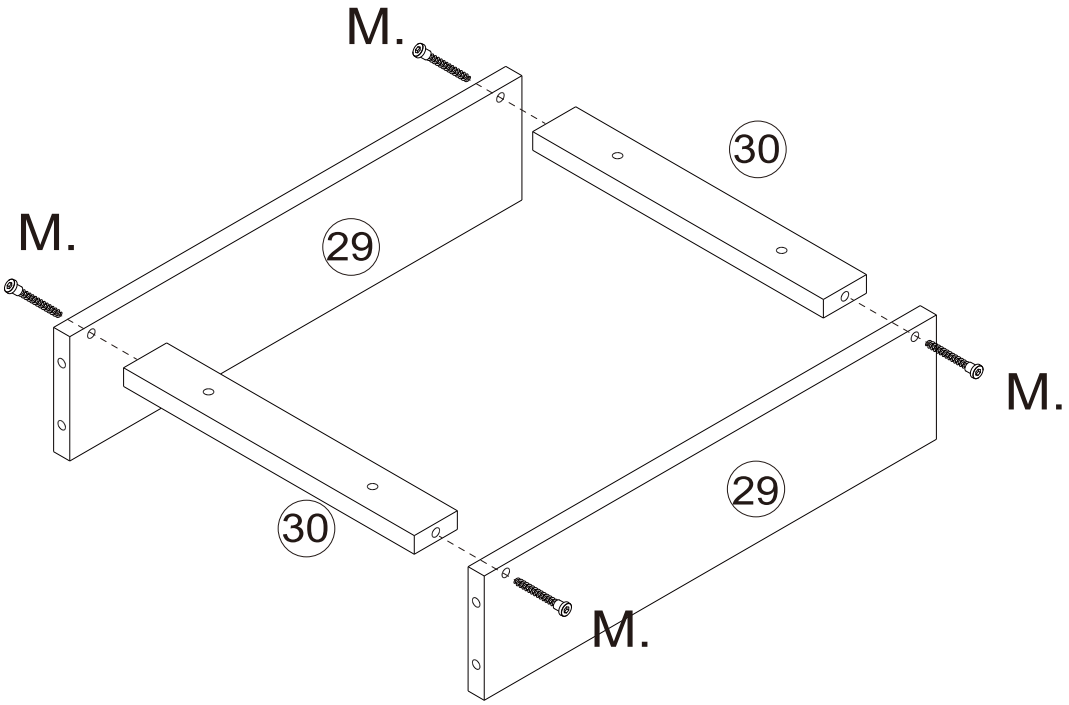

step 2

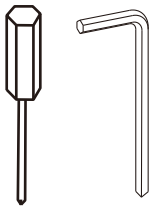

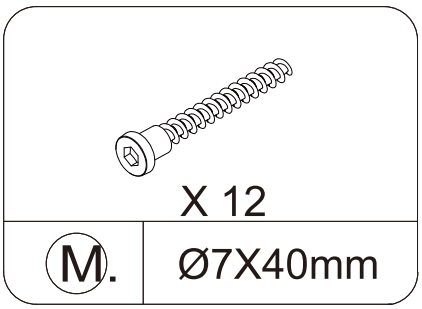

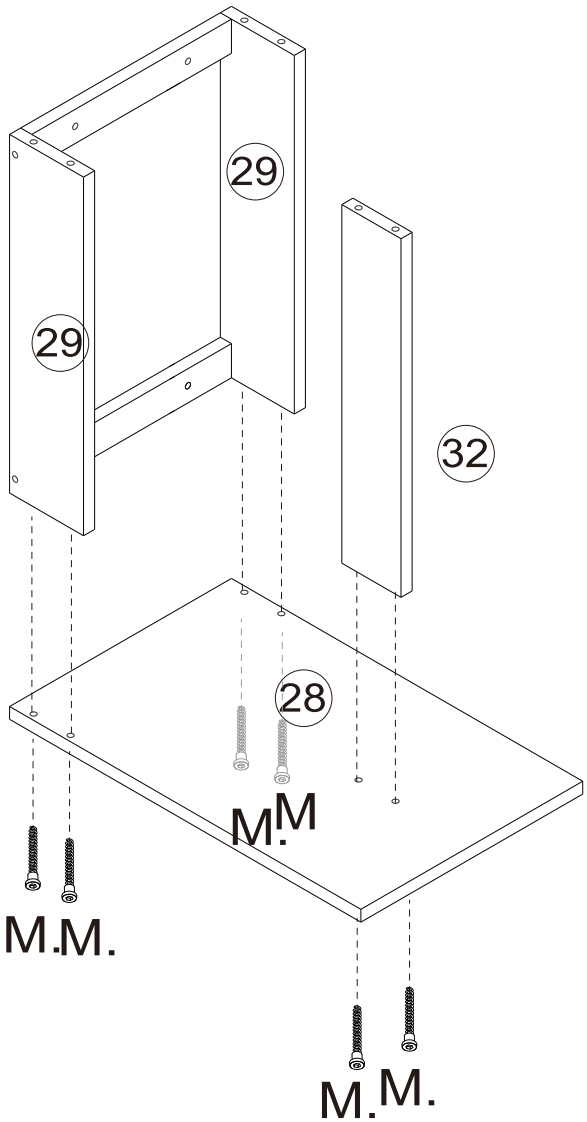

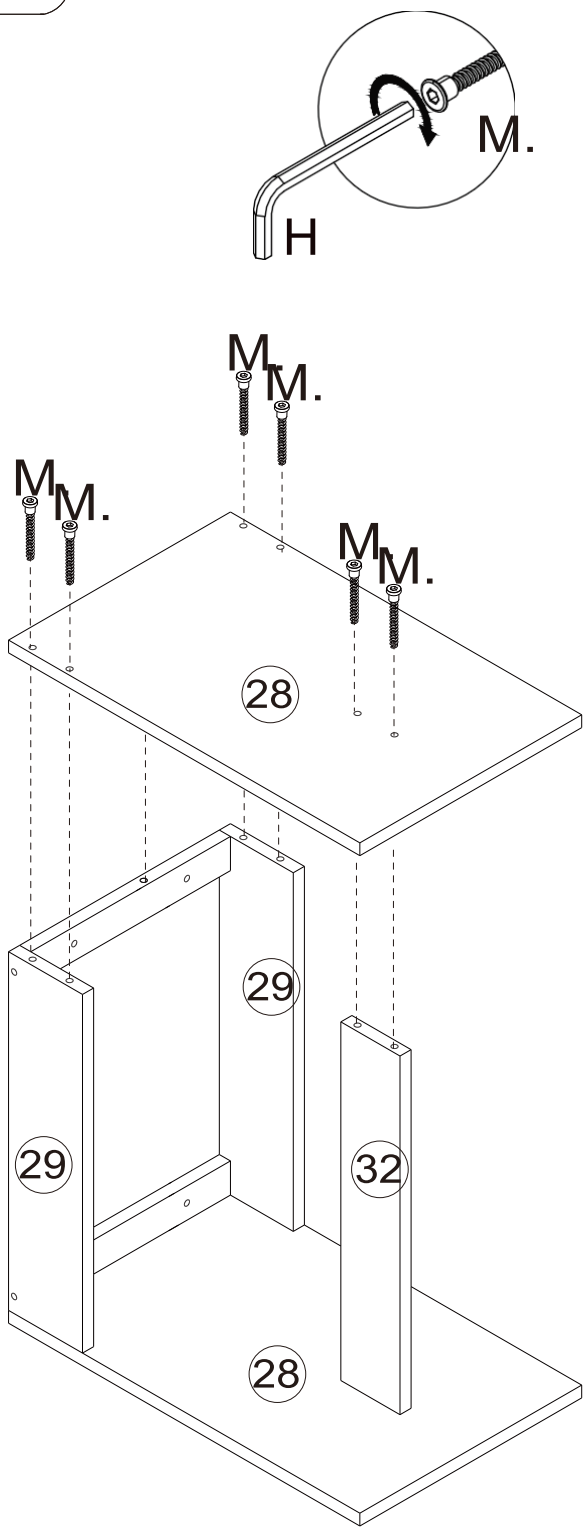

step 3

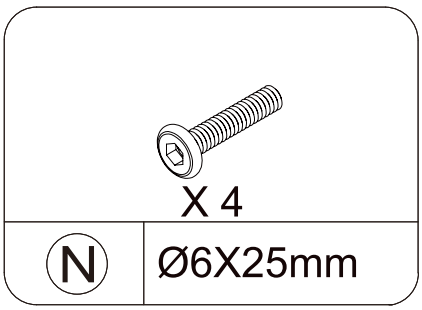

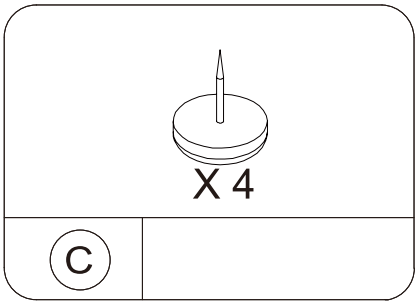

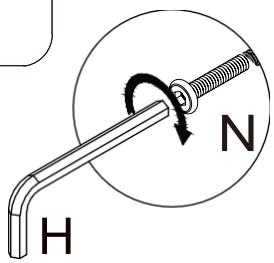

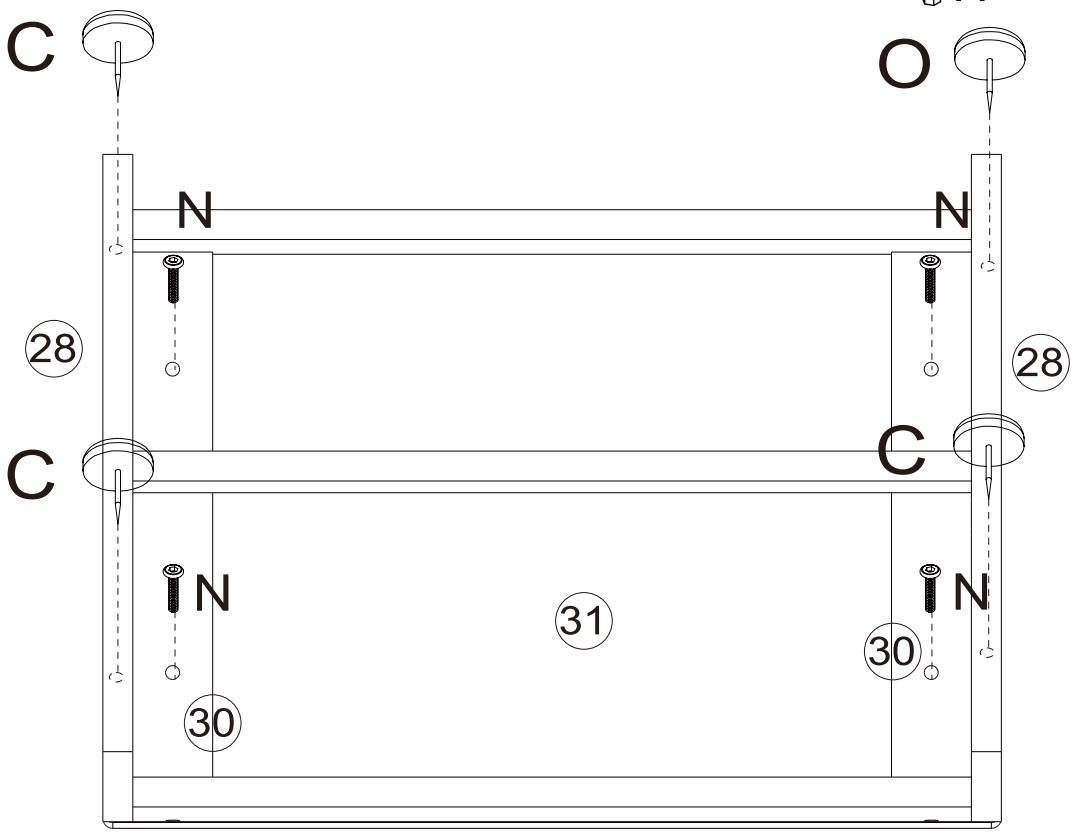

step 4

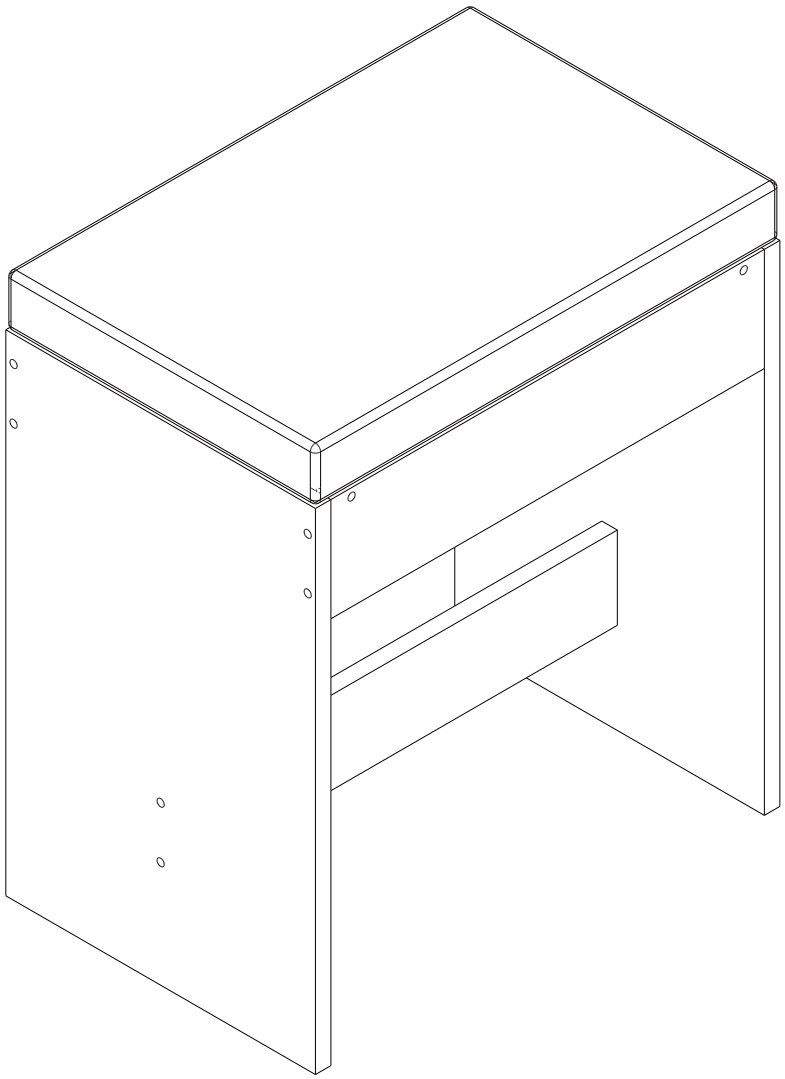

step 5

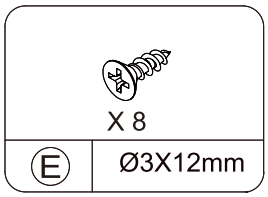
X 8
E
Ø3X12mm

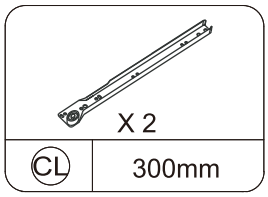
X 2
CL
300mm

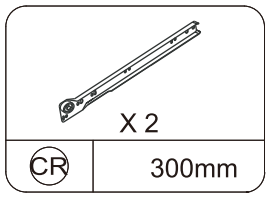
X 2
CR
300mm

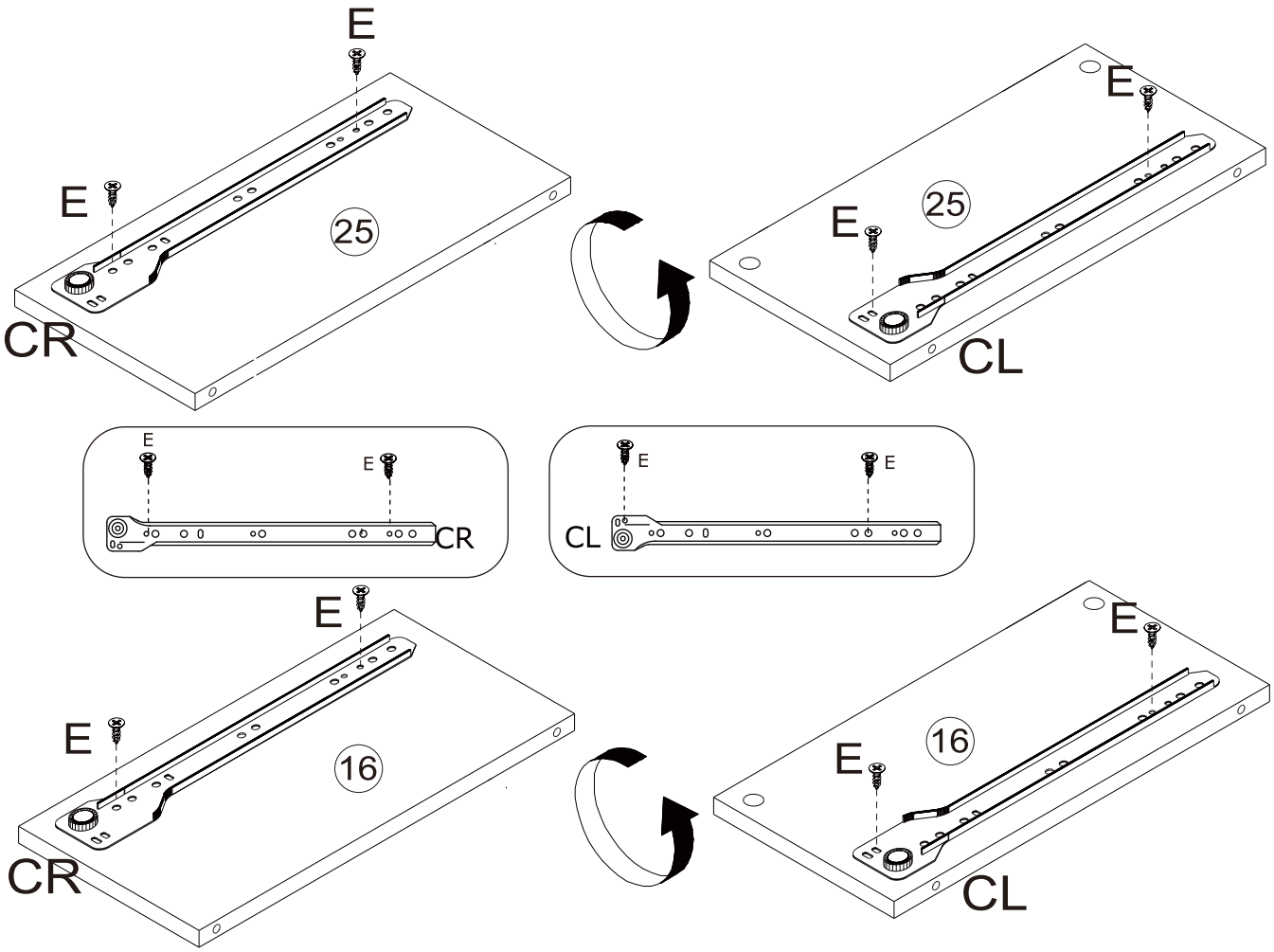
E
E
25
CR
E
E
25
CL
E
E
CR
E
E
CL
E
E
16
CR
E
E
16
CL

step 6

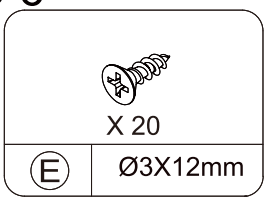
X 20
E
Ø3X12mm

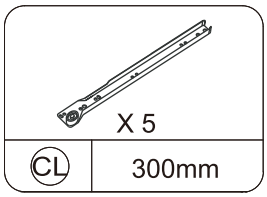
X 5
CL
300mm

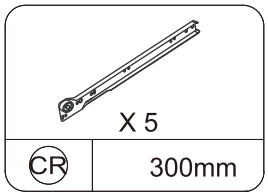
X 5
CR
300mm

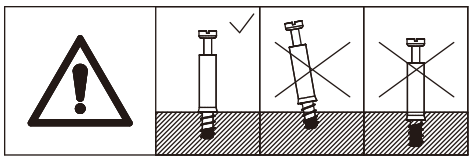

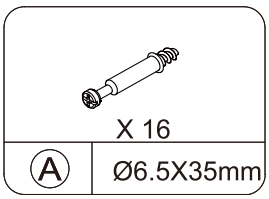
X 16
A
Ø6.5X35mm

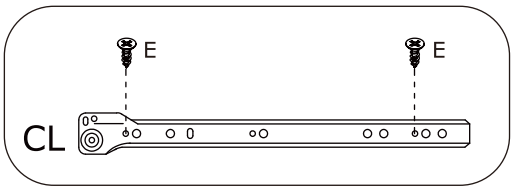
E
E
CL

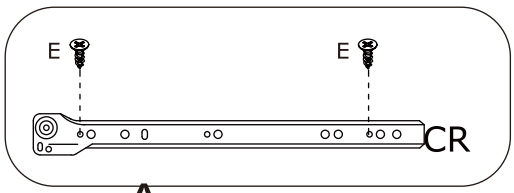
E
E
CR

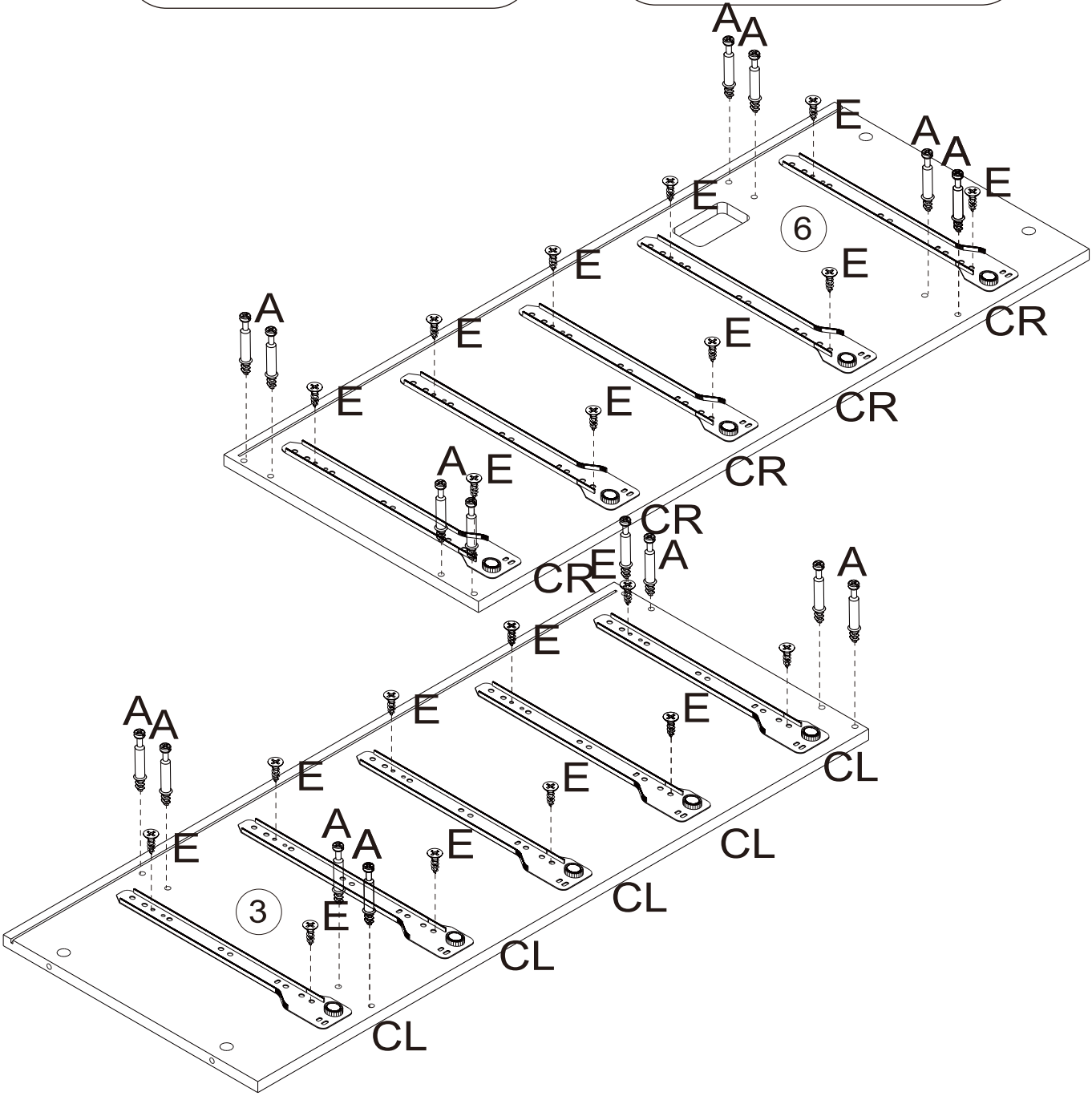
A
A
E
A
A
E
E
6
E
E
CR
A
E
E
E
E
CR
A
E
CR
CR
CR
E
A
A
E
E
E
A
A
E
E
E
CL
A
A
E
E
CL
3
E
CL
CL

step 7

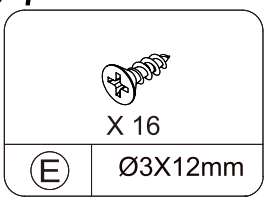
X 16
E
Ø3X12mm

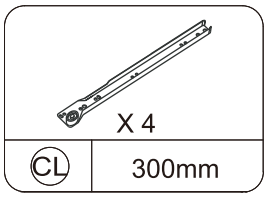
X 4
CL
300mm

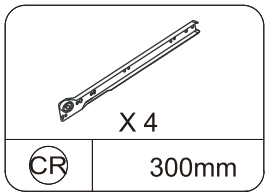
X 4
CR
300mm

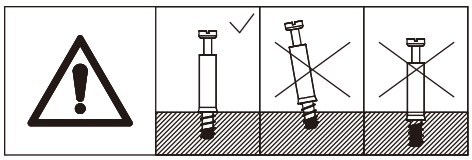

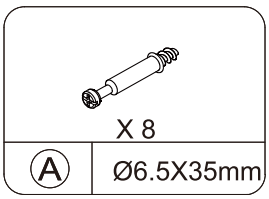
X 8
A
Ø6.5X35mm

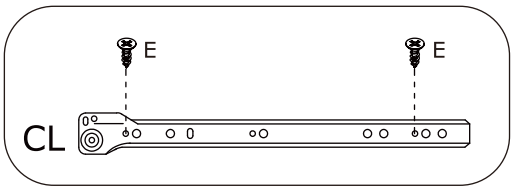
E
E
CL

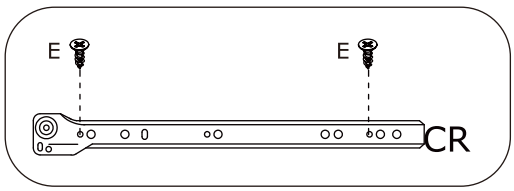
E
E
CR

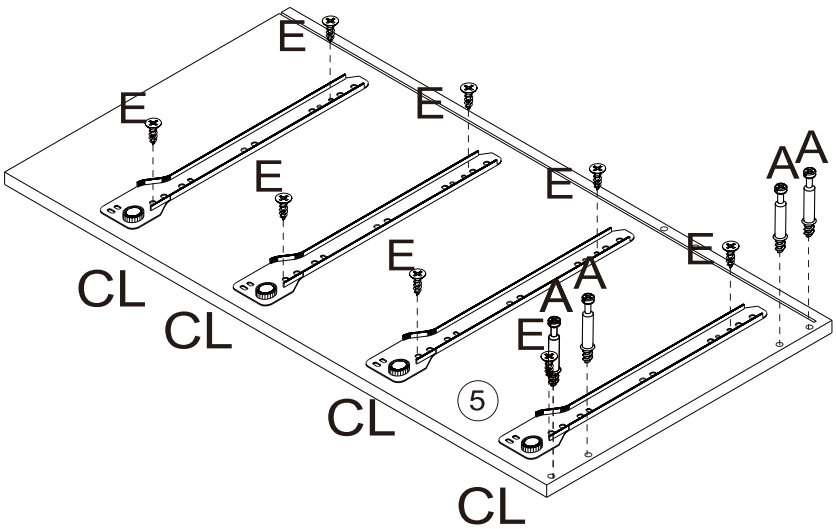
E
E
E
E
E
E
E
E
A
A
A
A
CL
CL
CL
CL
5

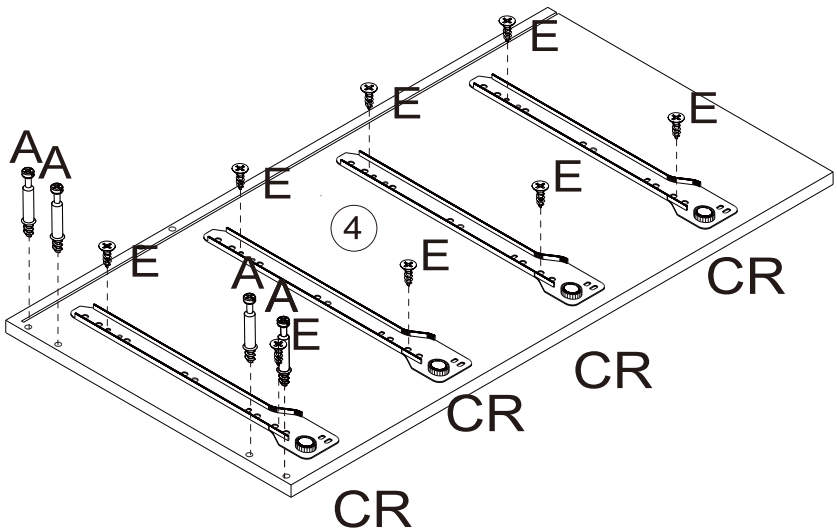
E
E
E
E
E
E
E
E
A
A
A
A
4
CR
CR
CR
CR

step 8

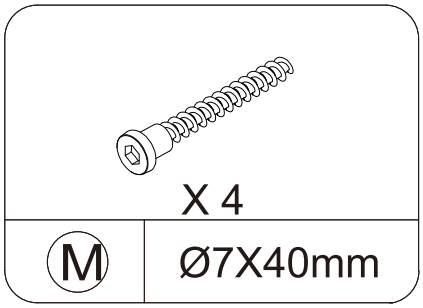

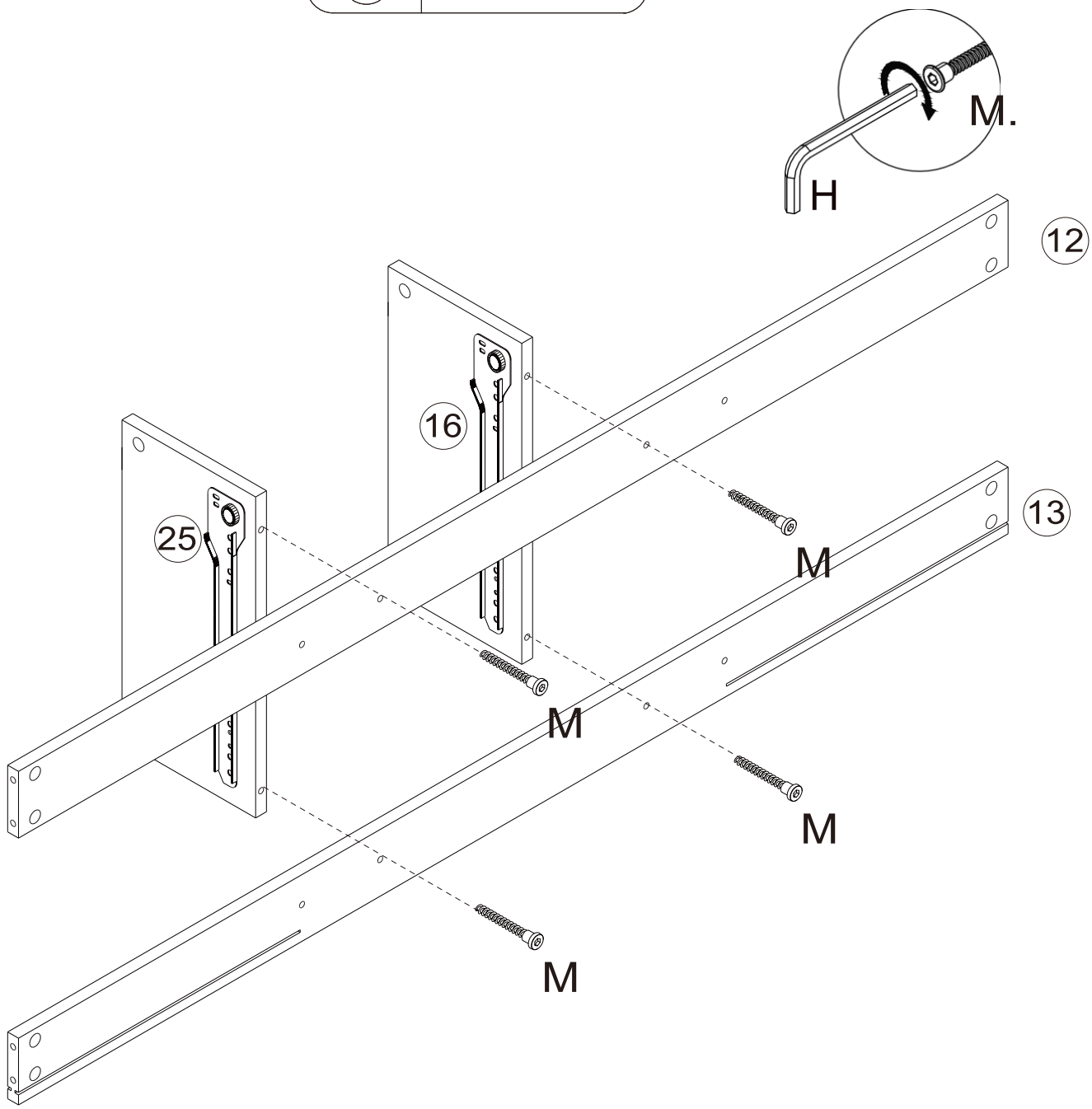

step 9

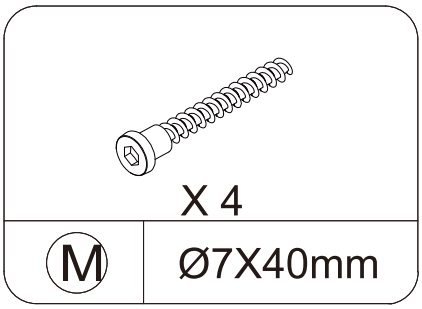

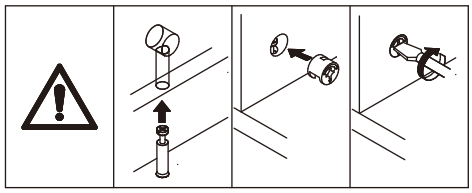

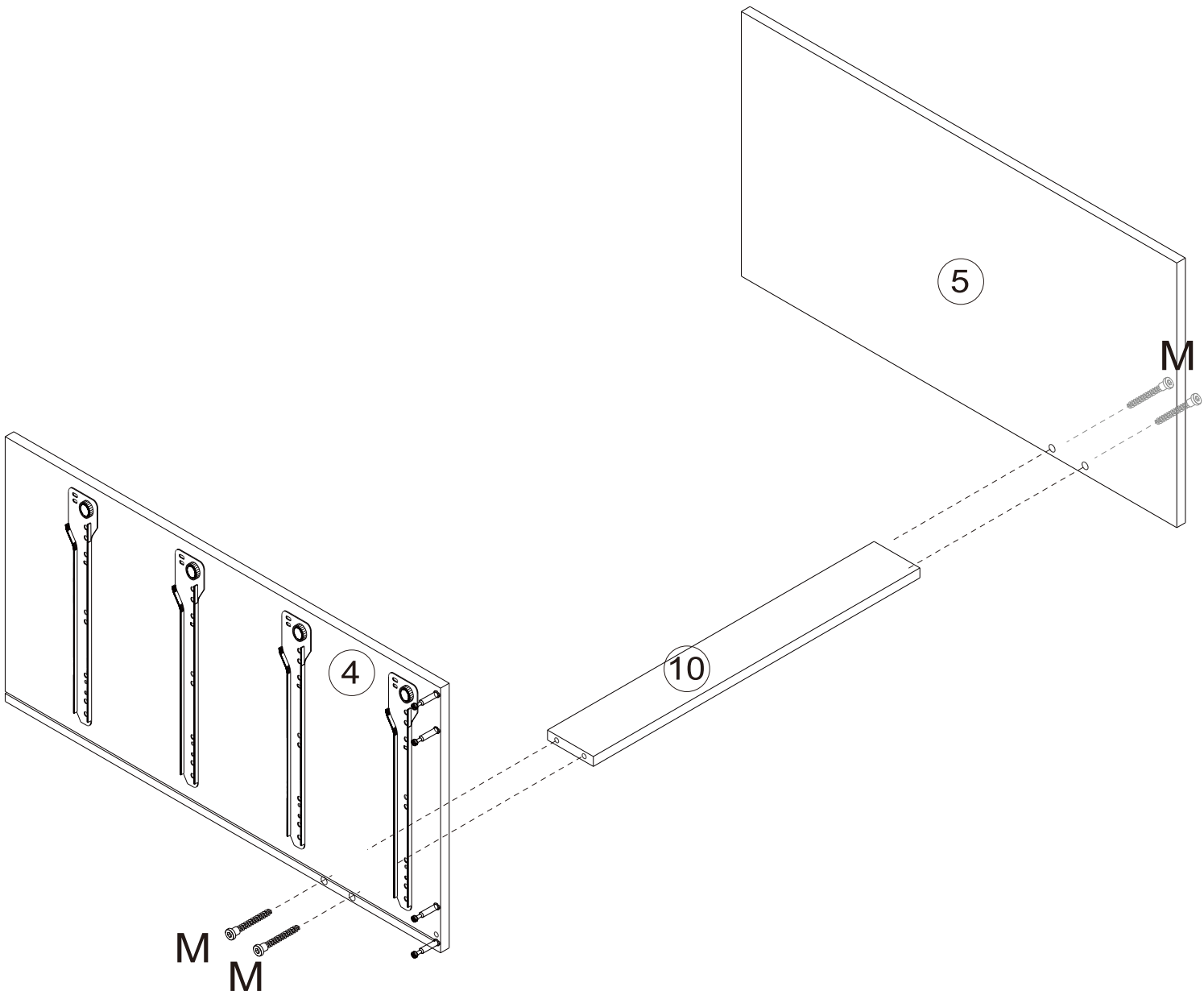

step 10

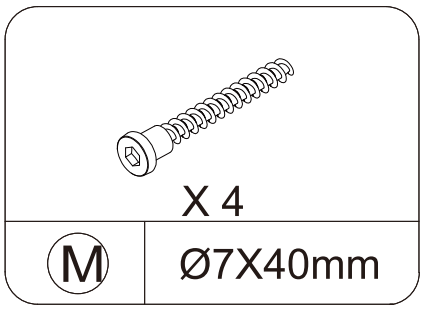

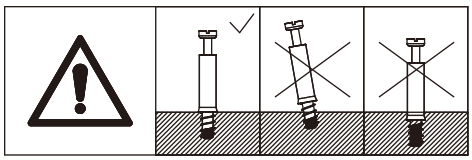

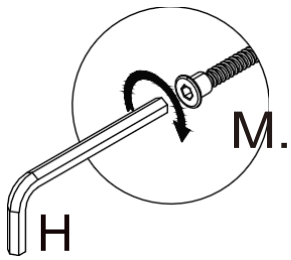

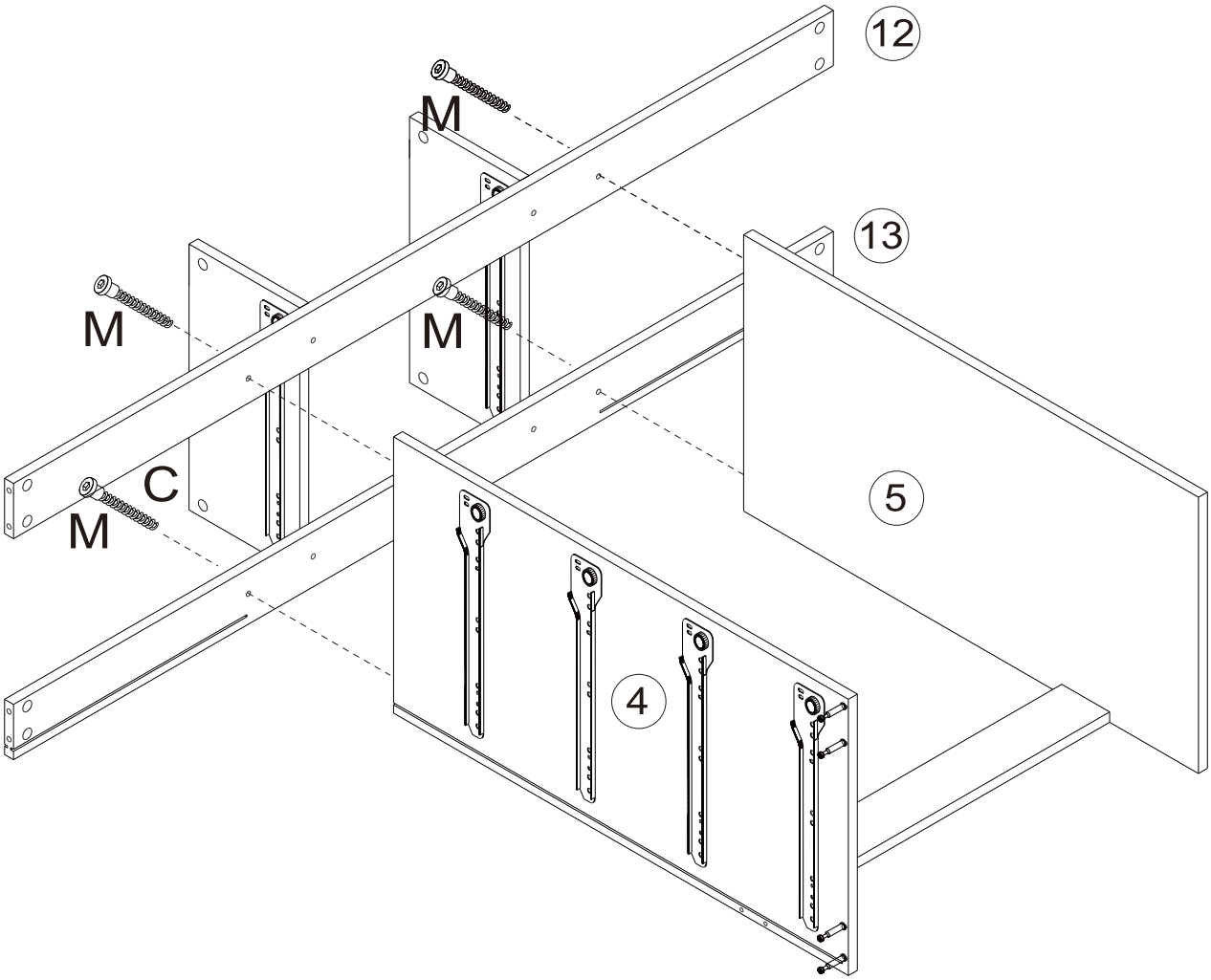

step 11

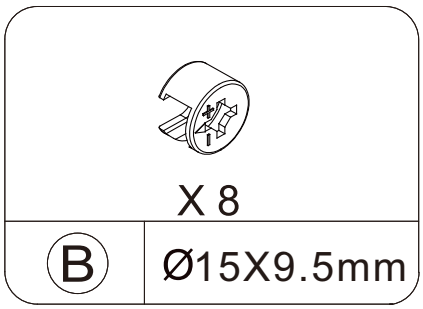

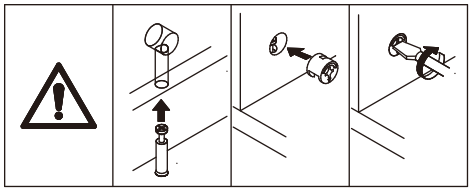

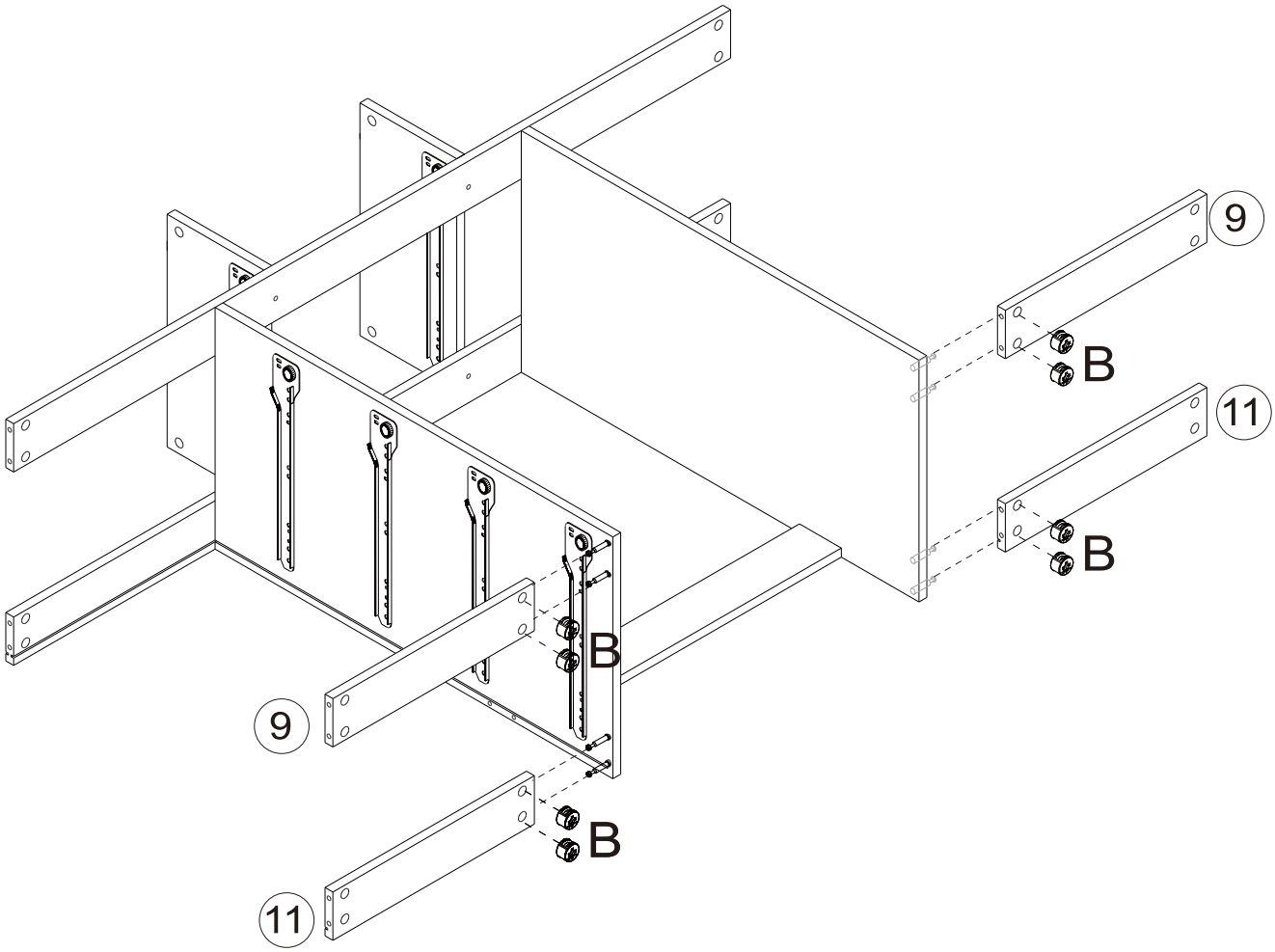

step 12

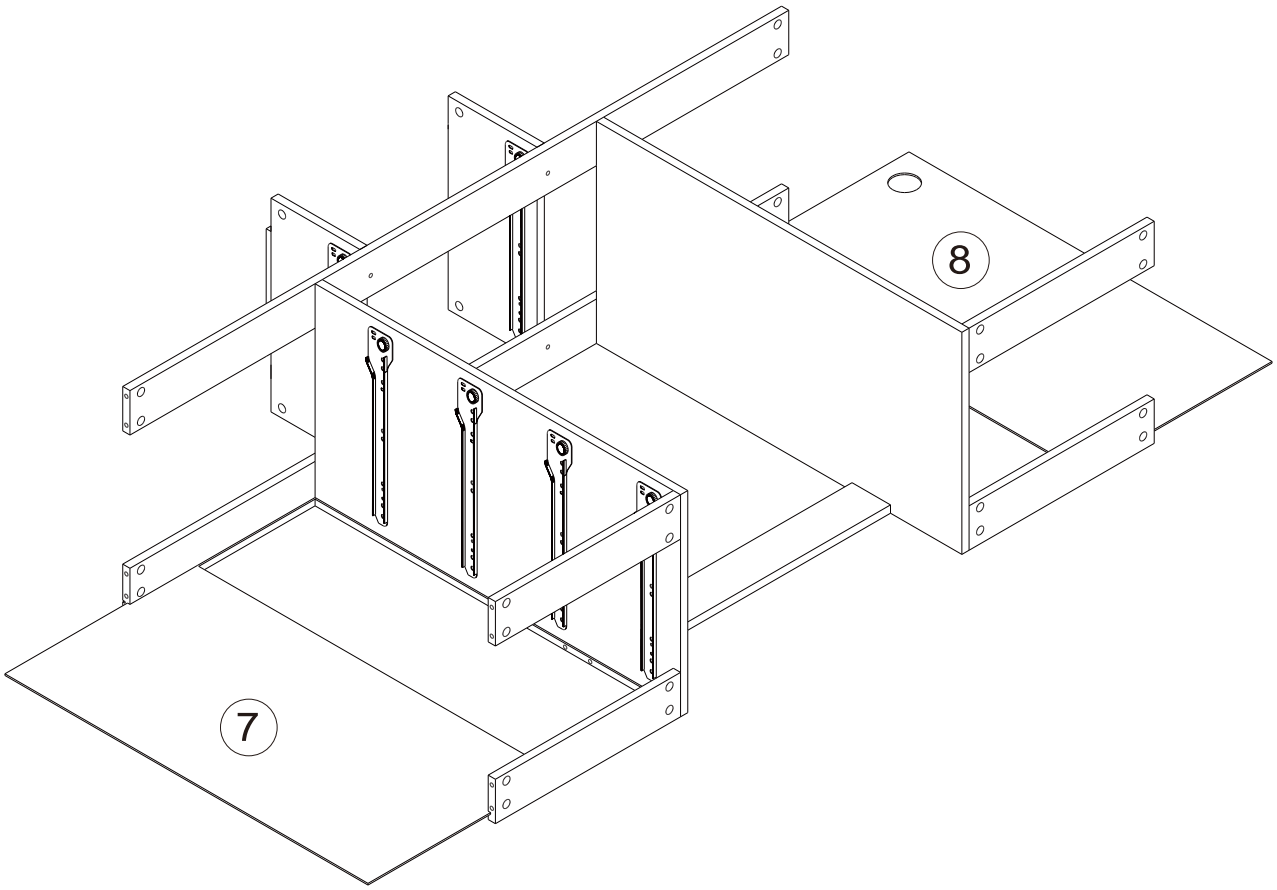

step 13

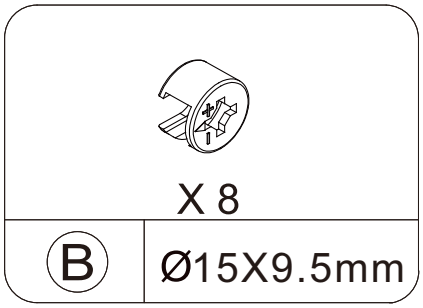

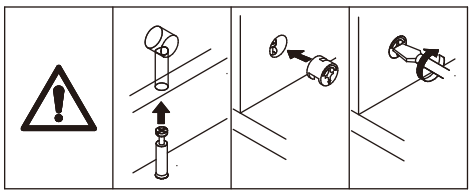

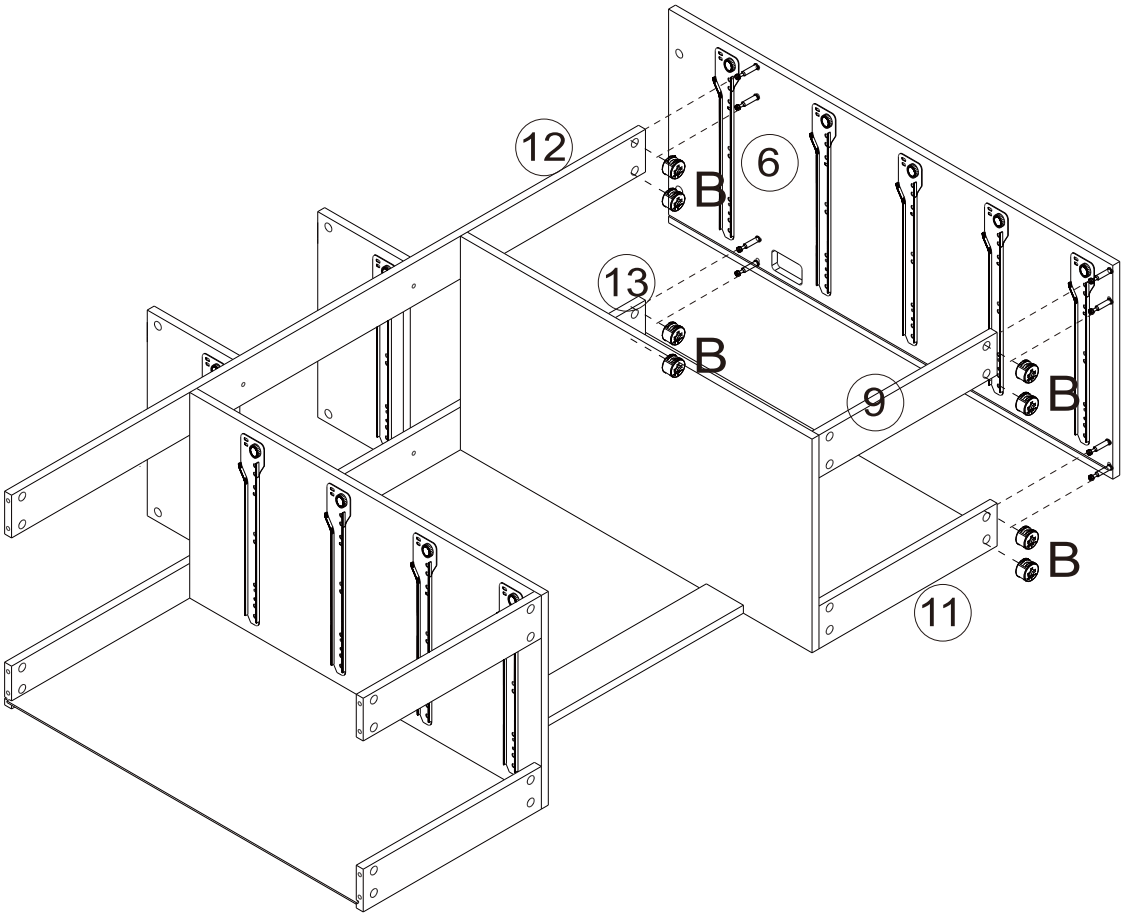

step 14

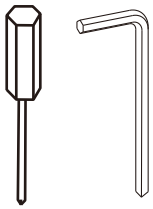

X 8

B	Ø15X9.5mm

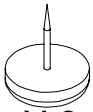

X 8

C	

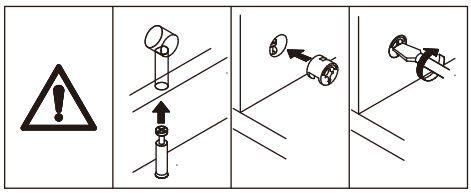

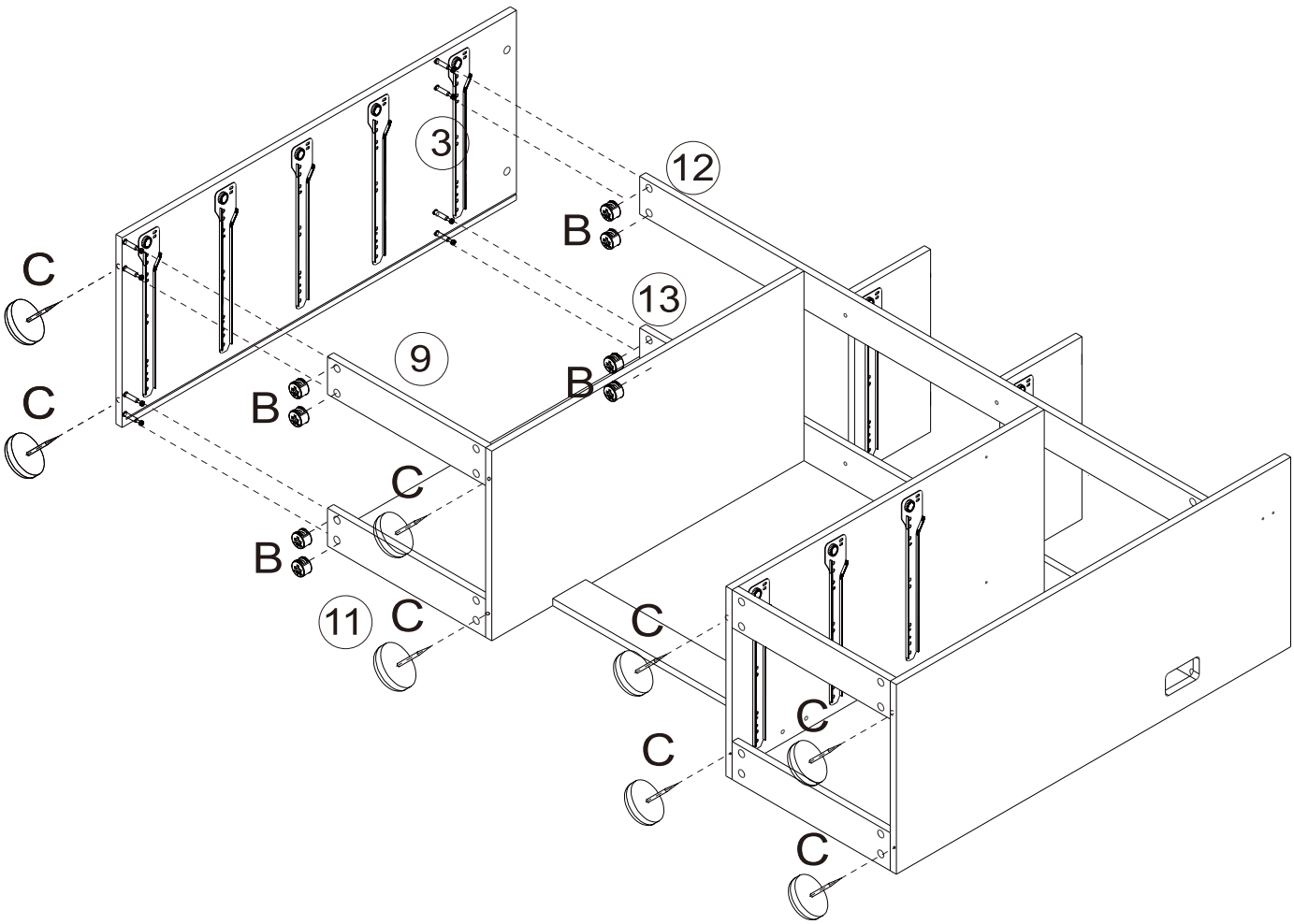

step 15

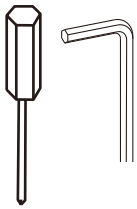

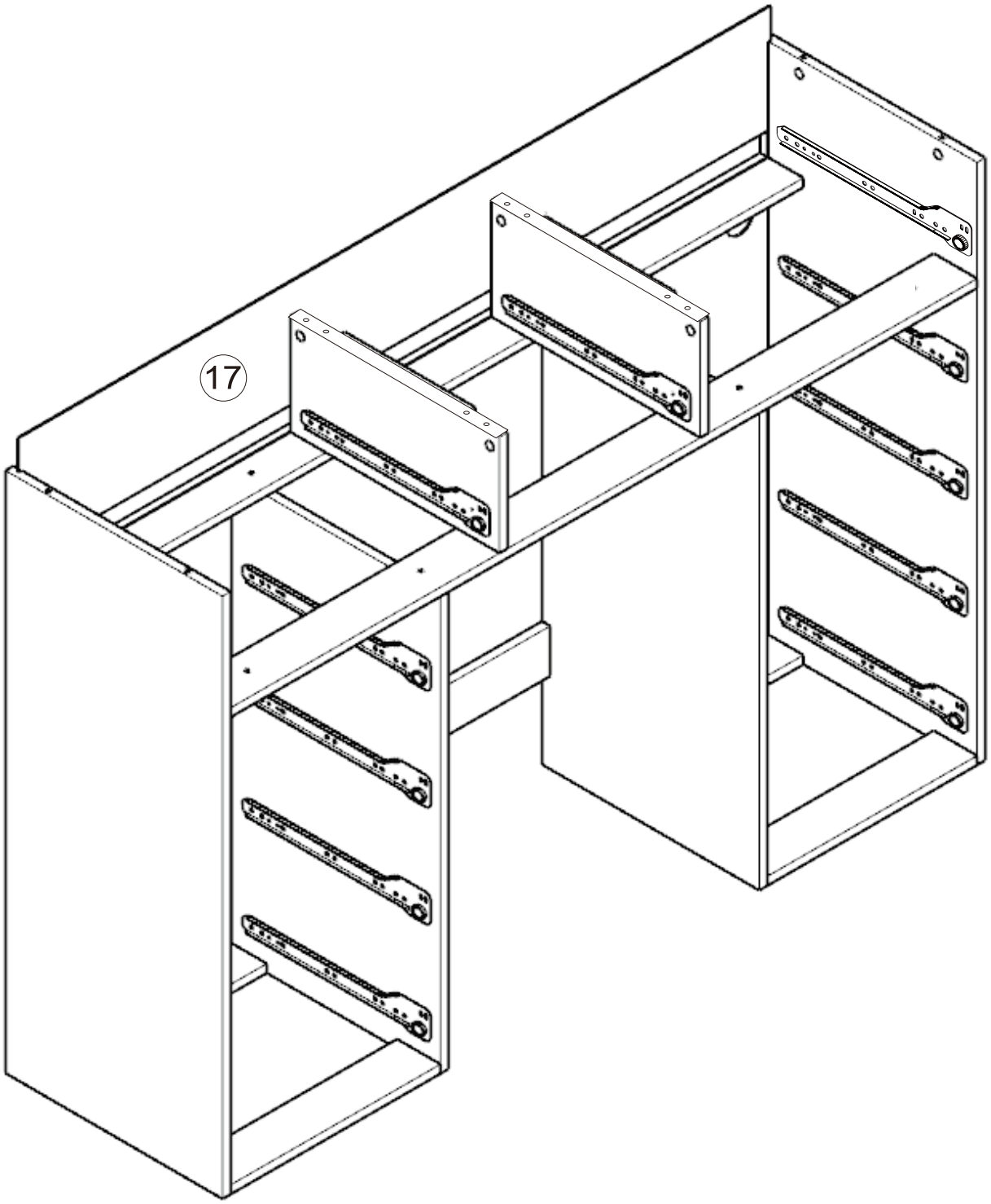

step 16

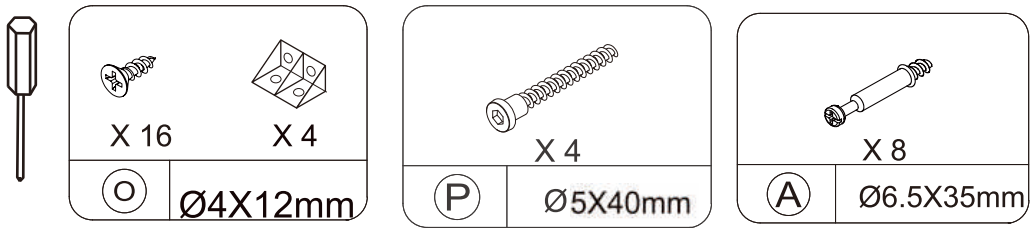
X 16
X 4
O
Ø4X12mm
X 4
P
Ø5X40mm
X 8
A
Ø6.5X35mm

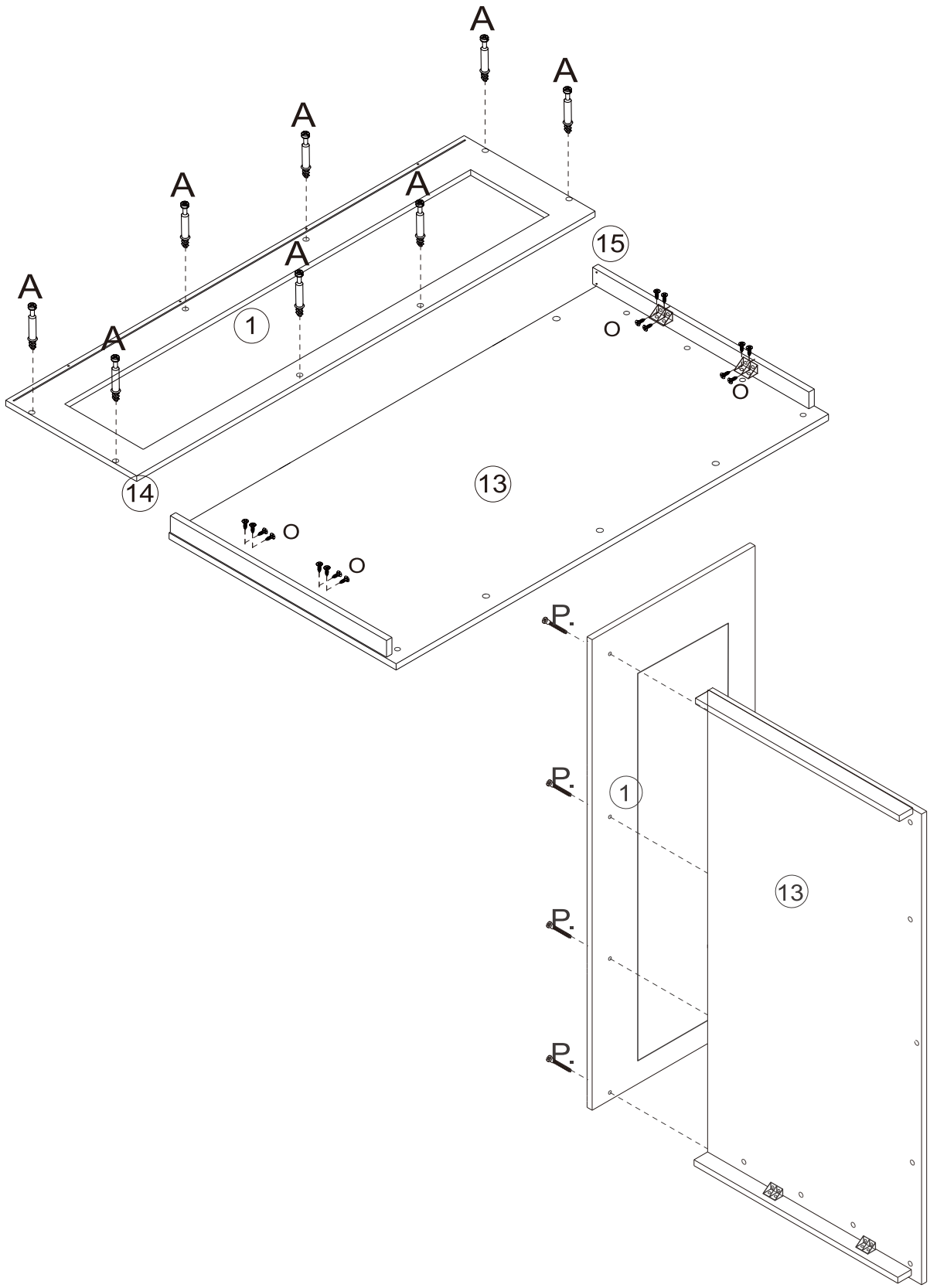
A
A
A
A
A
A
A
A
15
1
O
O
14
13
O
O
P.
P.
1
13
P.
P.

step 17

X8	
B	Ø15X9.5mm

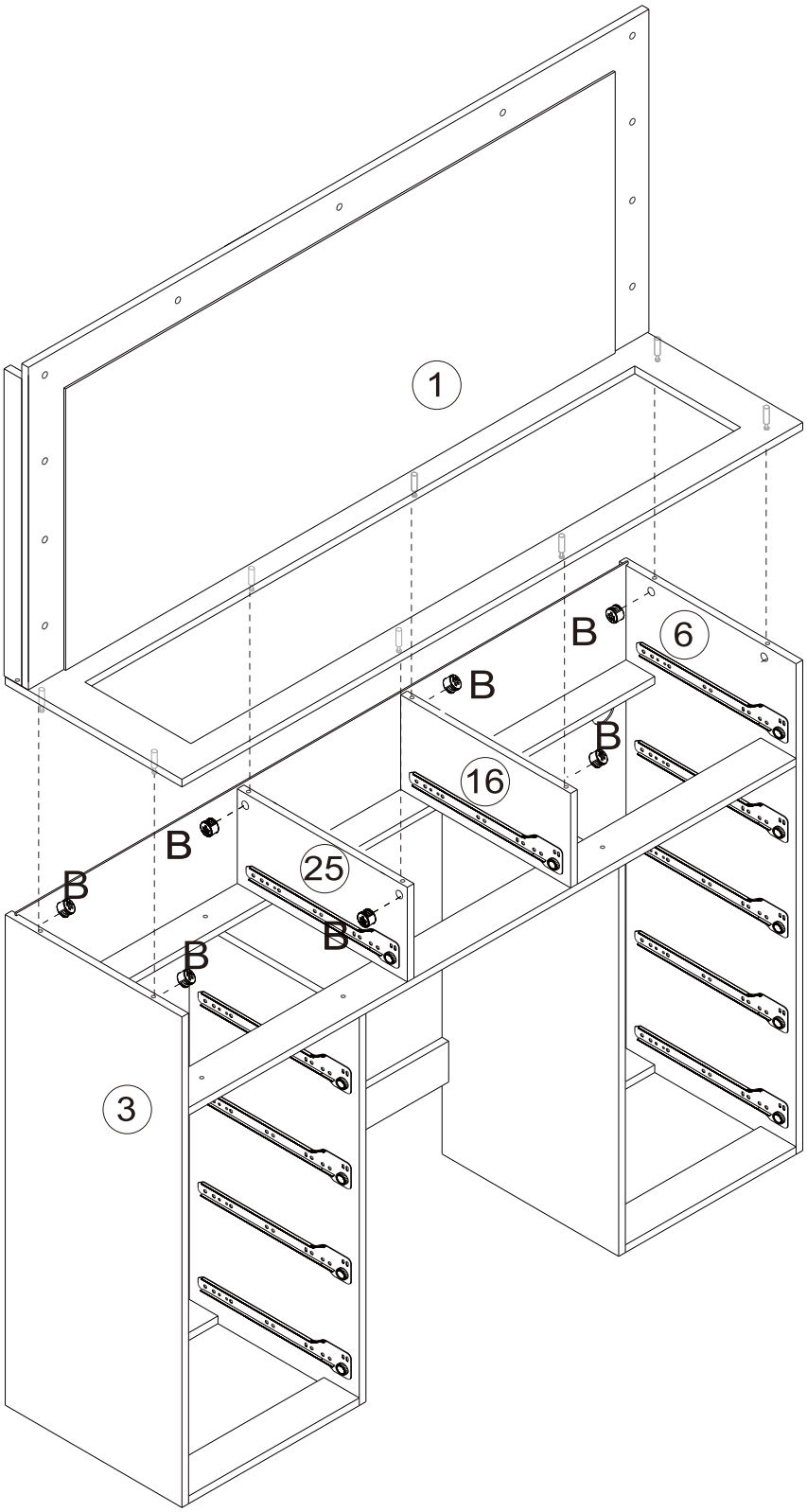

step 18

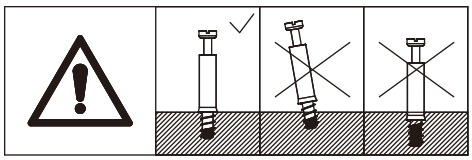

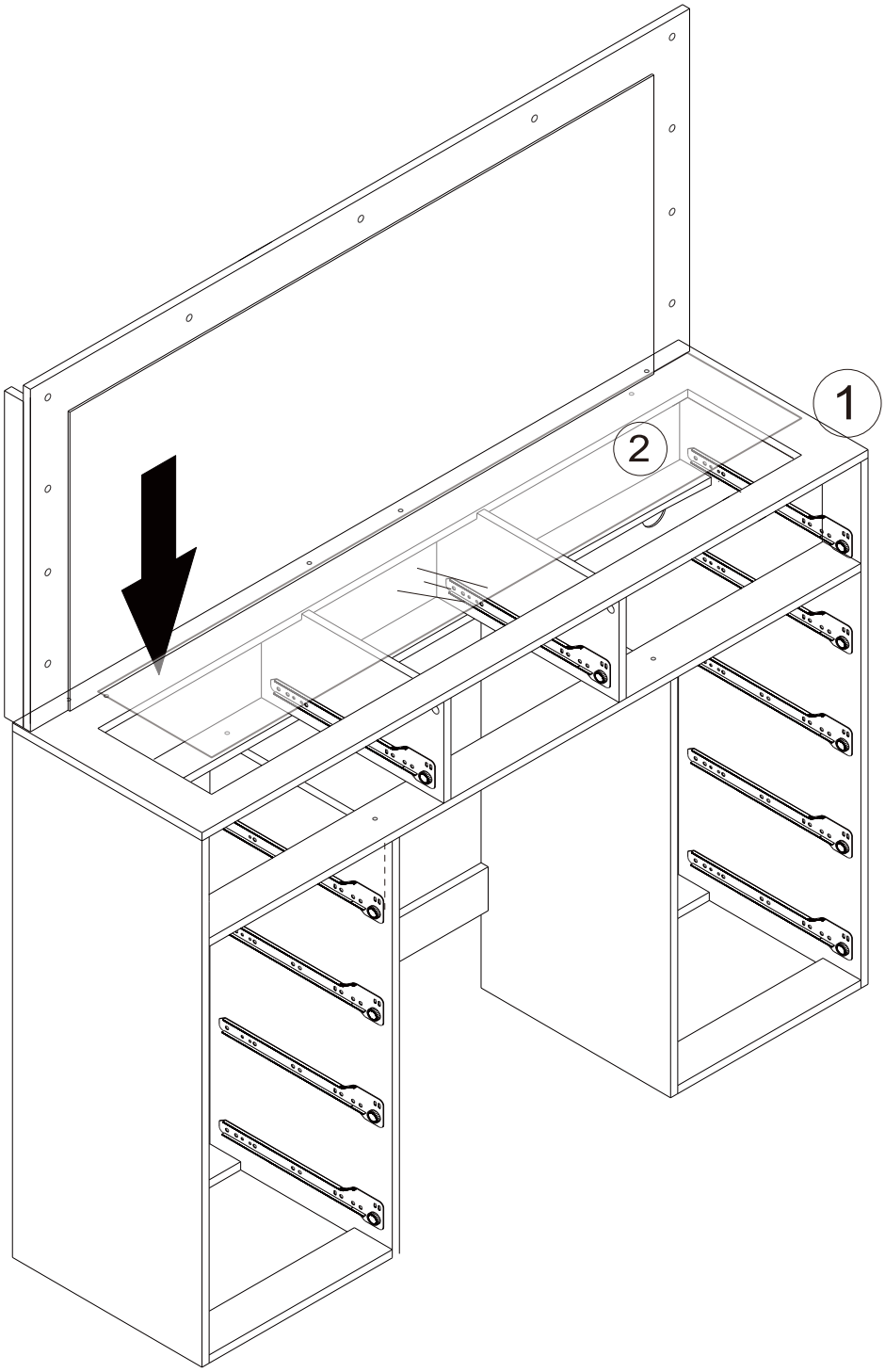

step 19

X 8

L	Ø3X12mm

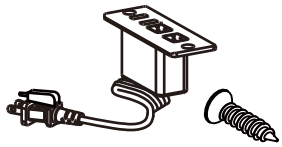

X 1 X 2

K	Ø3X12mm

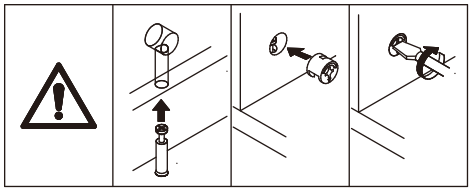

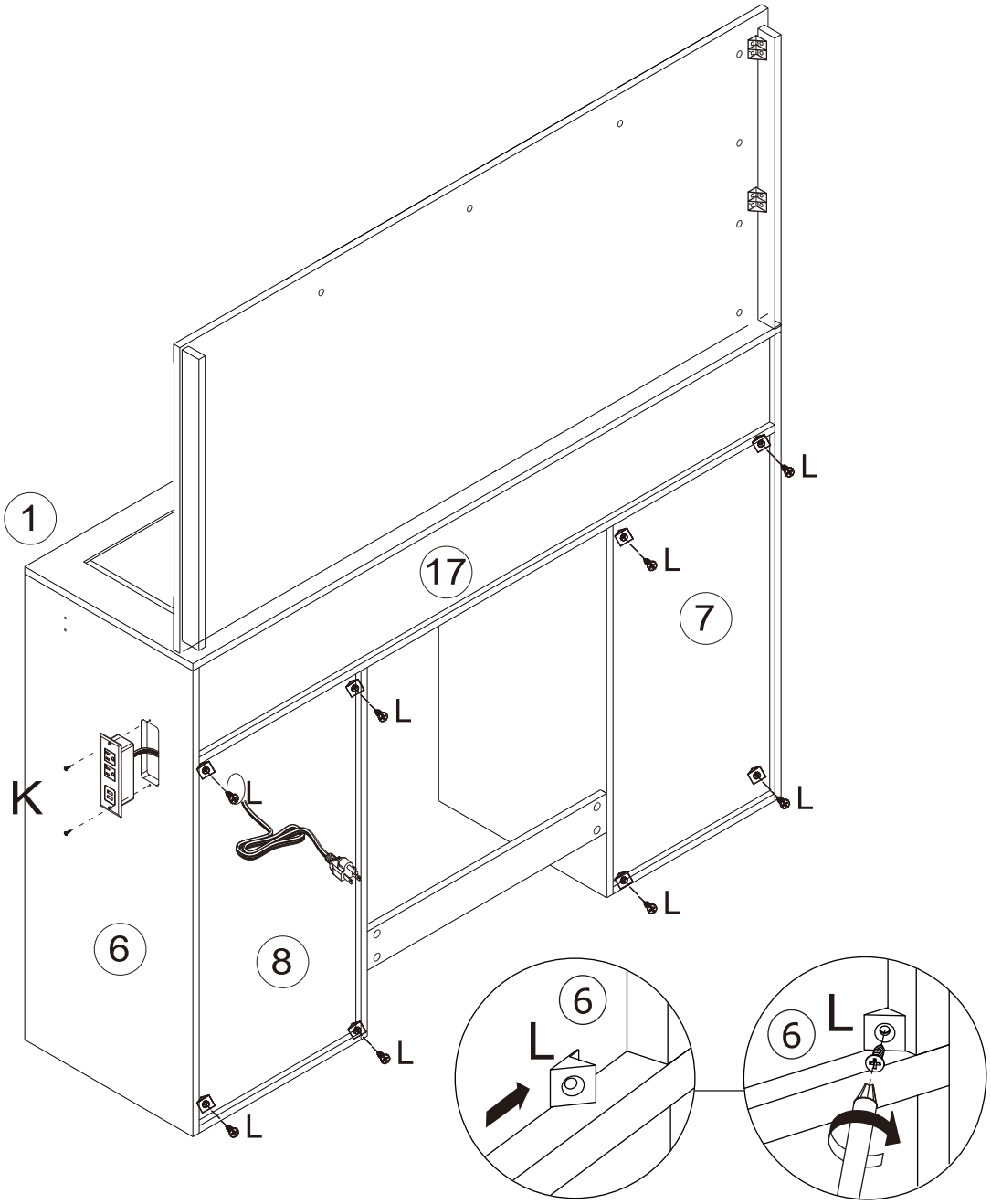

step 20

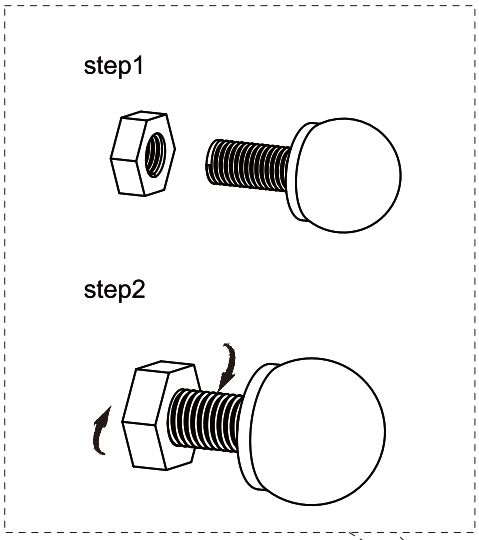
step1
step2

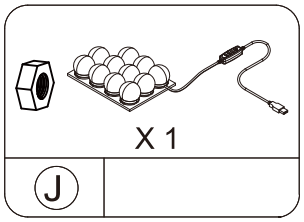
X 1
J

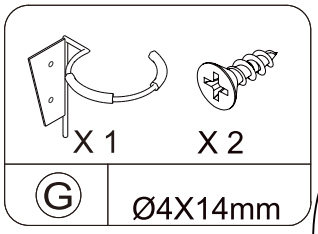
X 1
X 2
G
Ø4X14mm

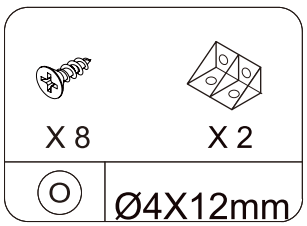
X 8
X 2
O
Ø4X12mm

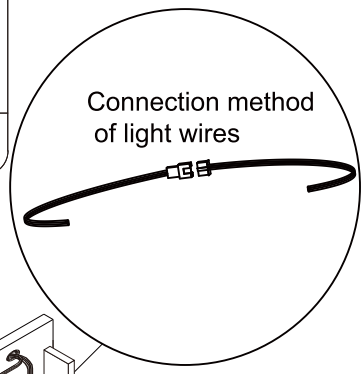
Connection method
of light wires

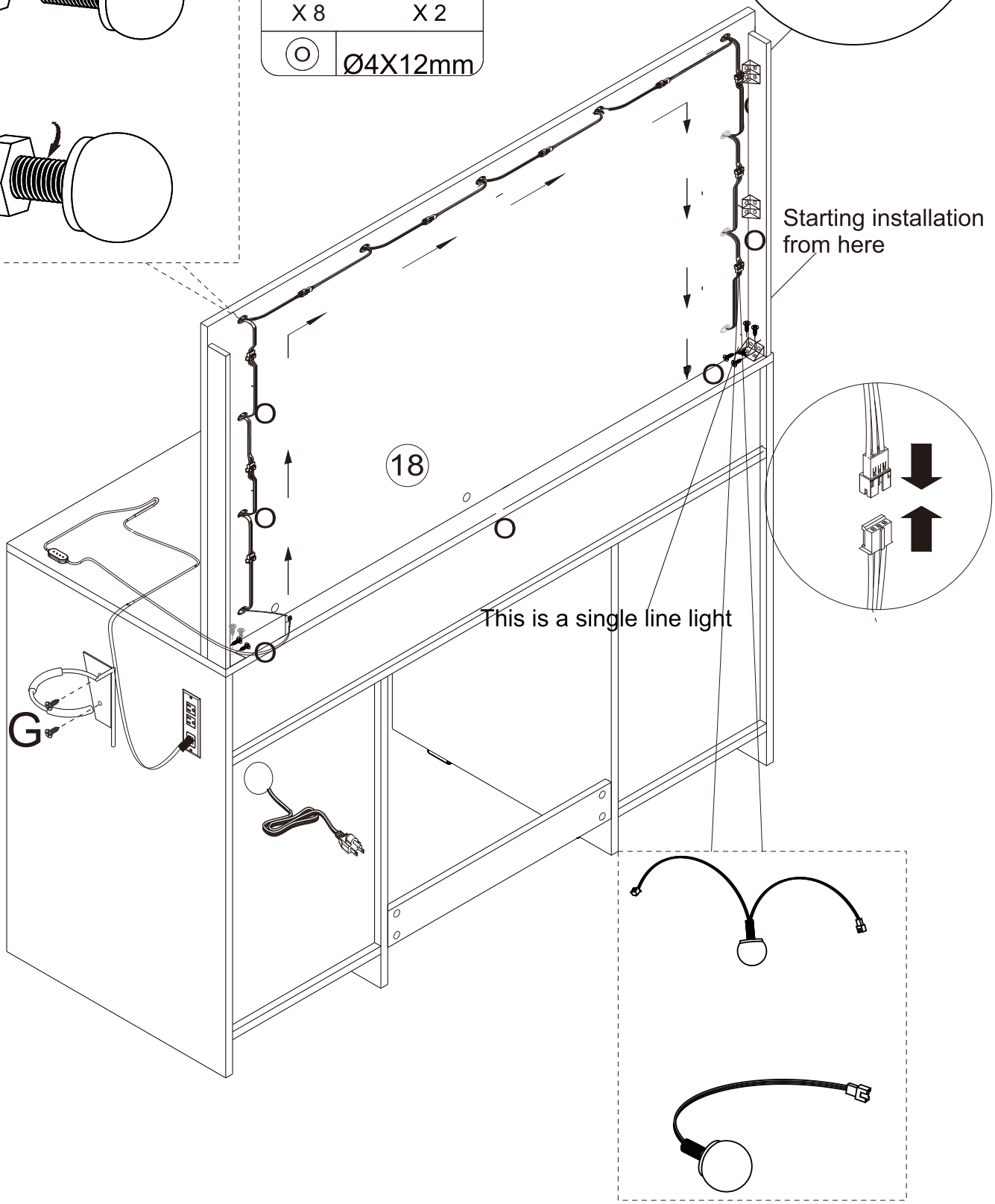
Starting installation
from here
18
This is a single line light
G

step 21

X 32	X32	X 8 X 8	X 32
A Ø6.5X35mm	B Ø15X9.5mm	D Ø4X20mm	F Ø5X30mm

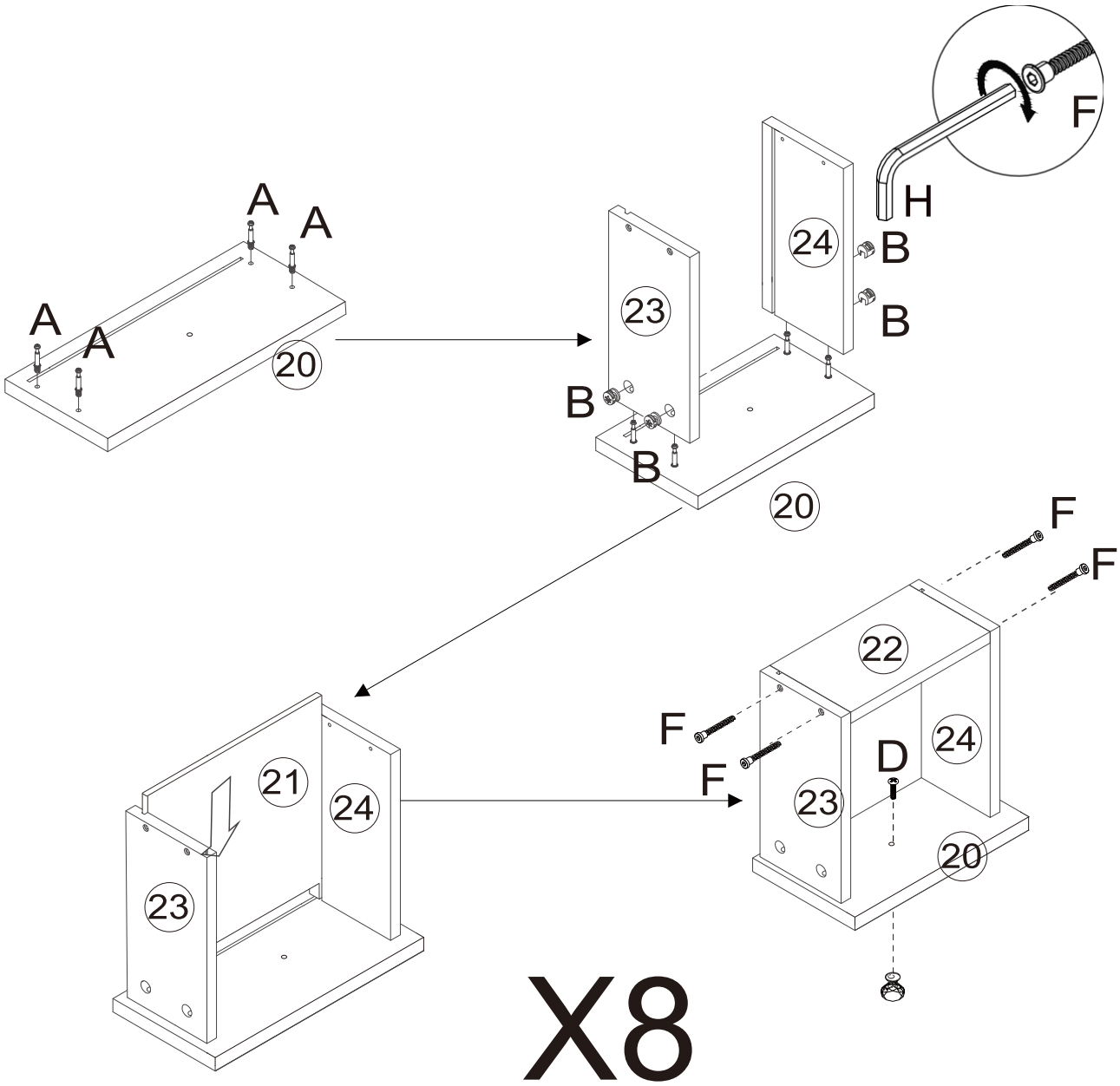

step 22

X 12	X 12	X 3 X 3	X 12
A Ø6.5X35mm	B Ø15X9.5mm	D Ø4X20mm	F Ø5X30mm

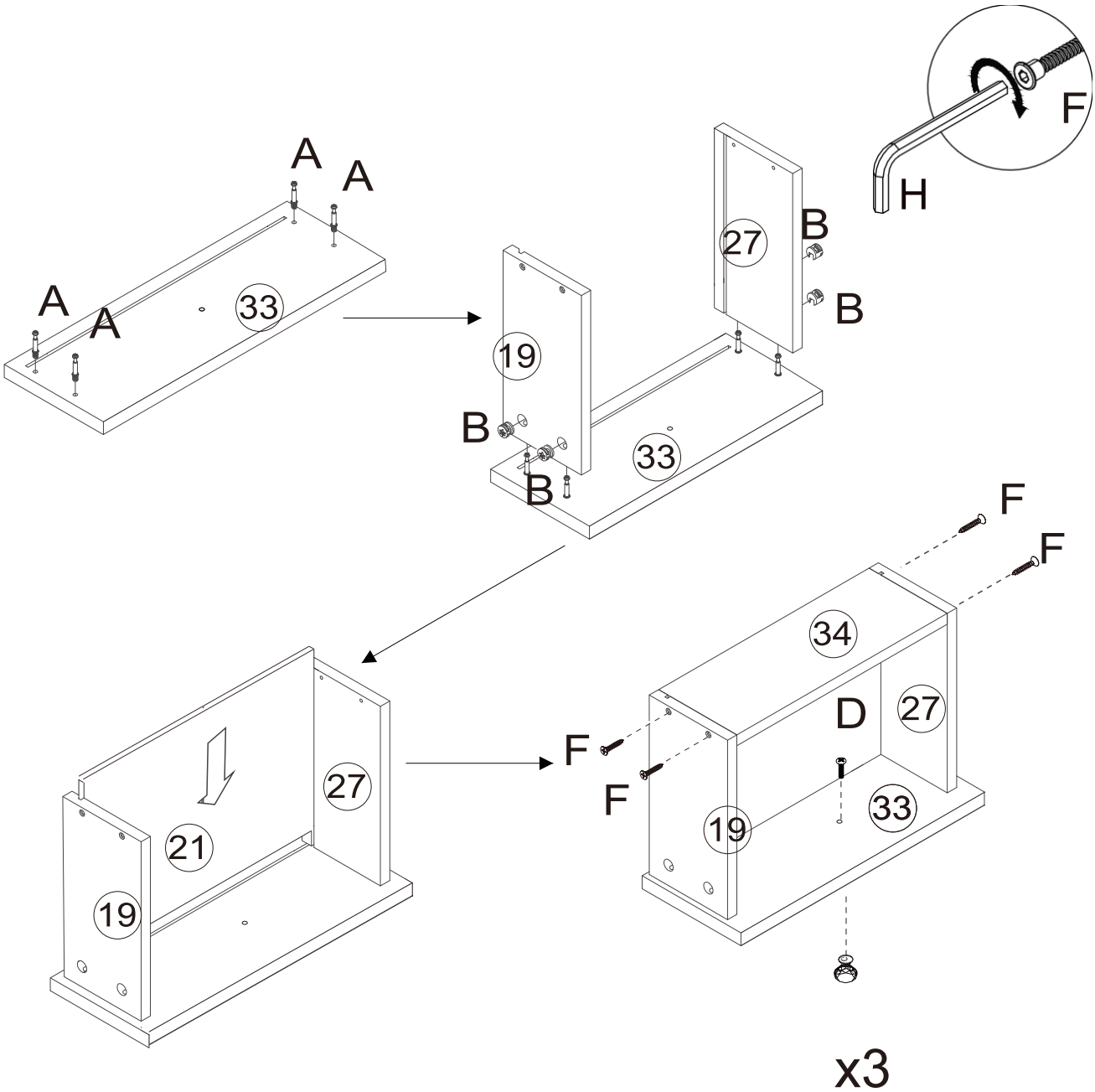

step 23

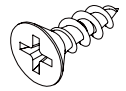

X 44

E	Ø3X12mm

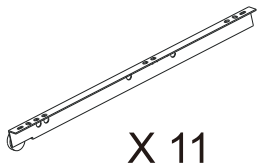

X 11

DL	300mm

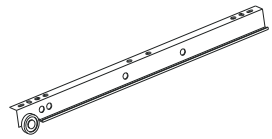

X 11

DR	300mm

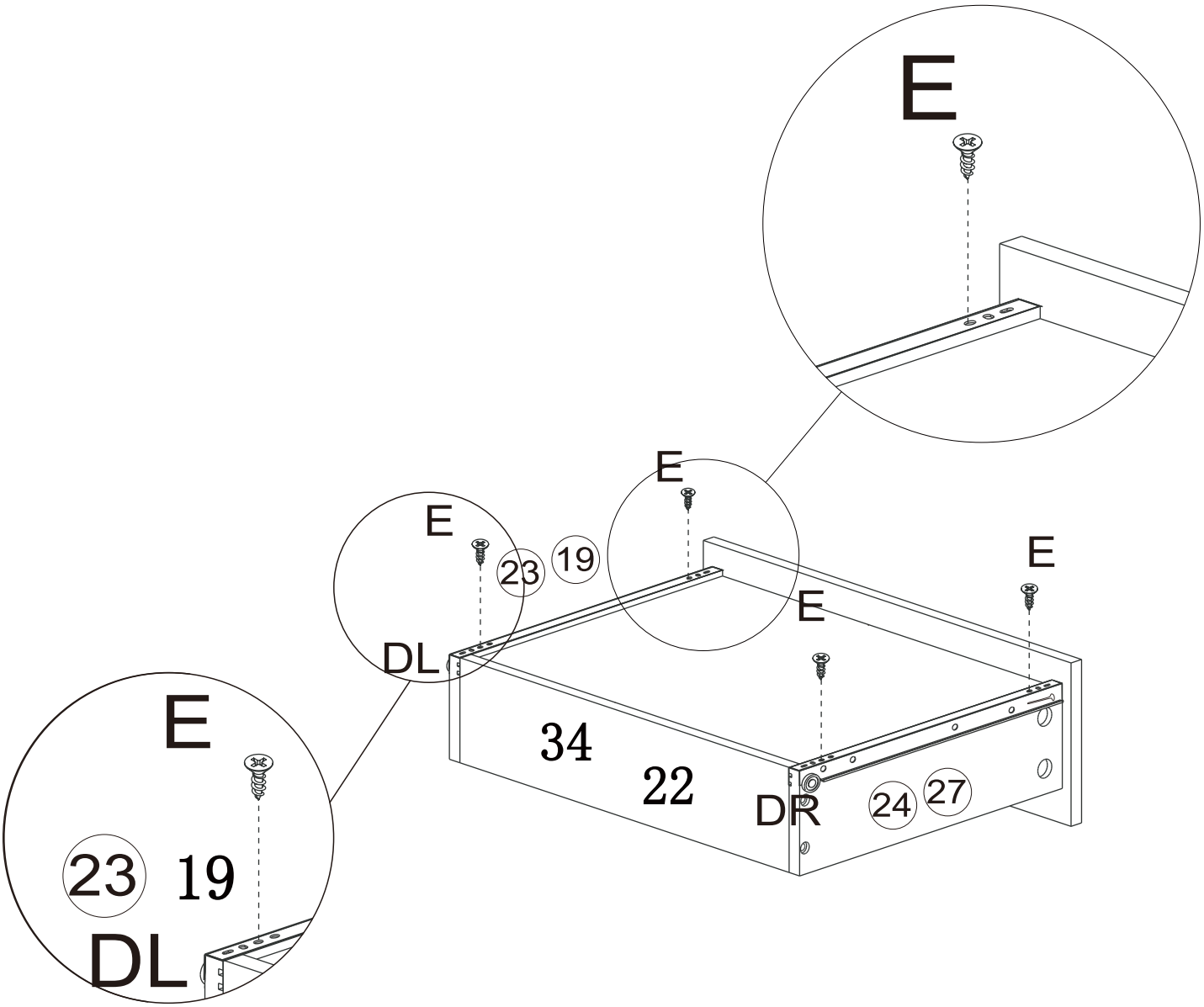

x11

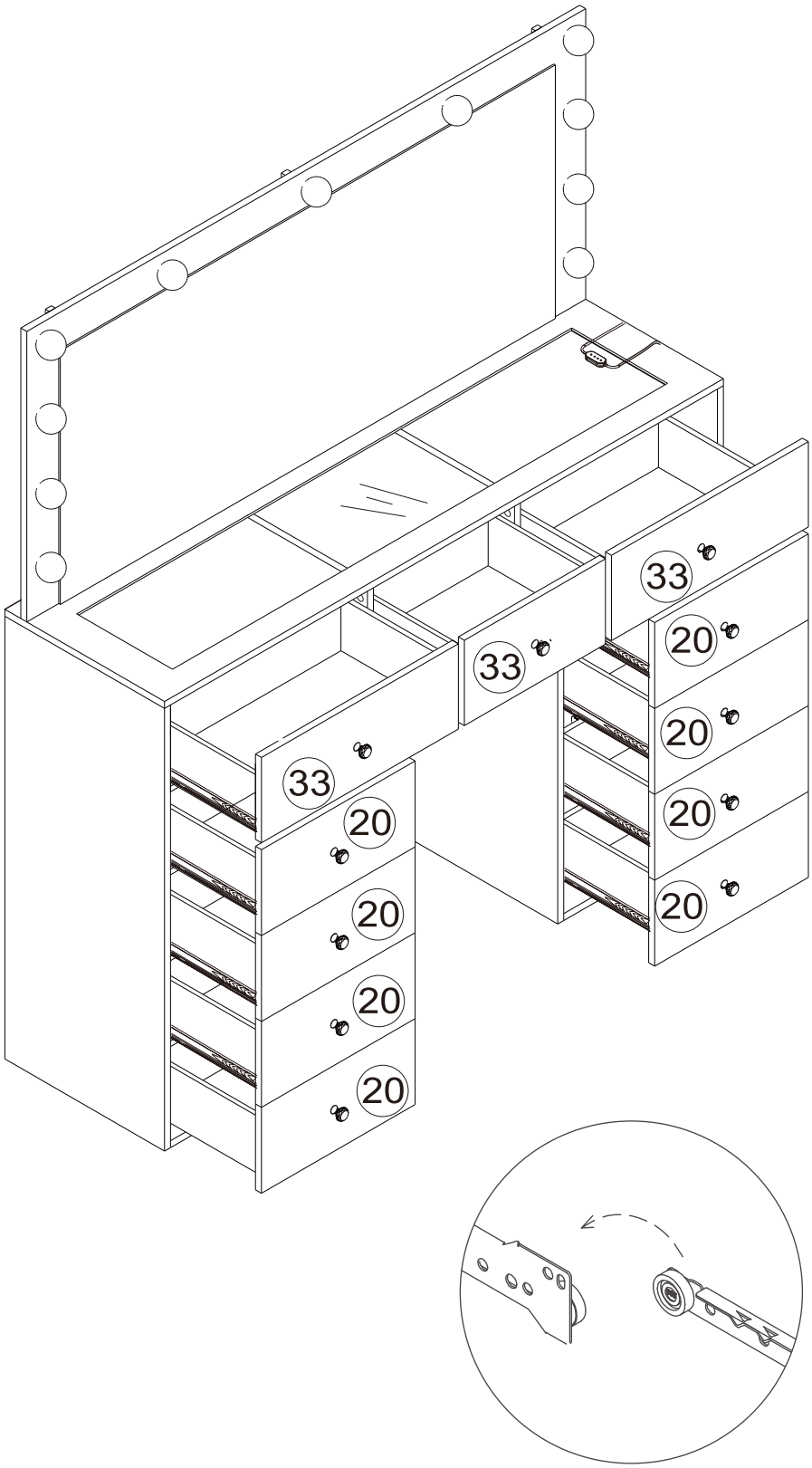
33
20
20
20
20
33
33
20
20
20
20
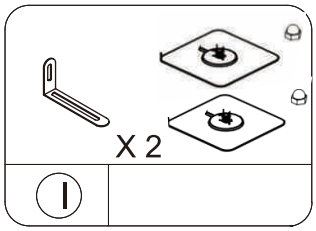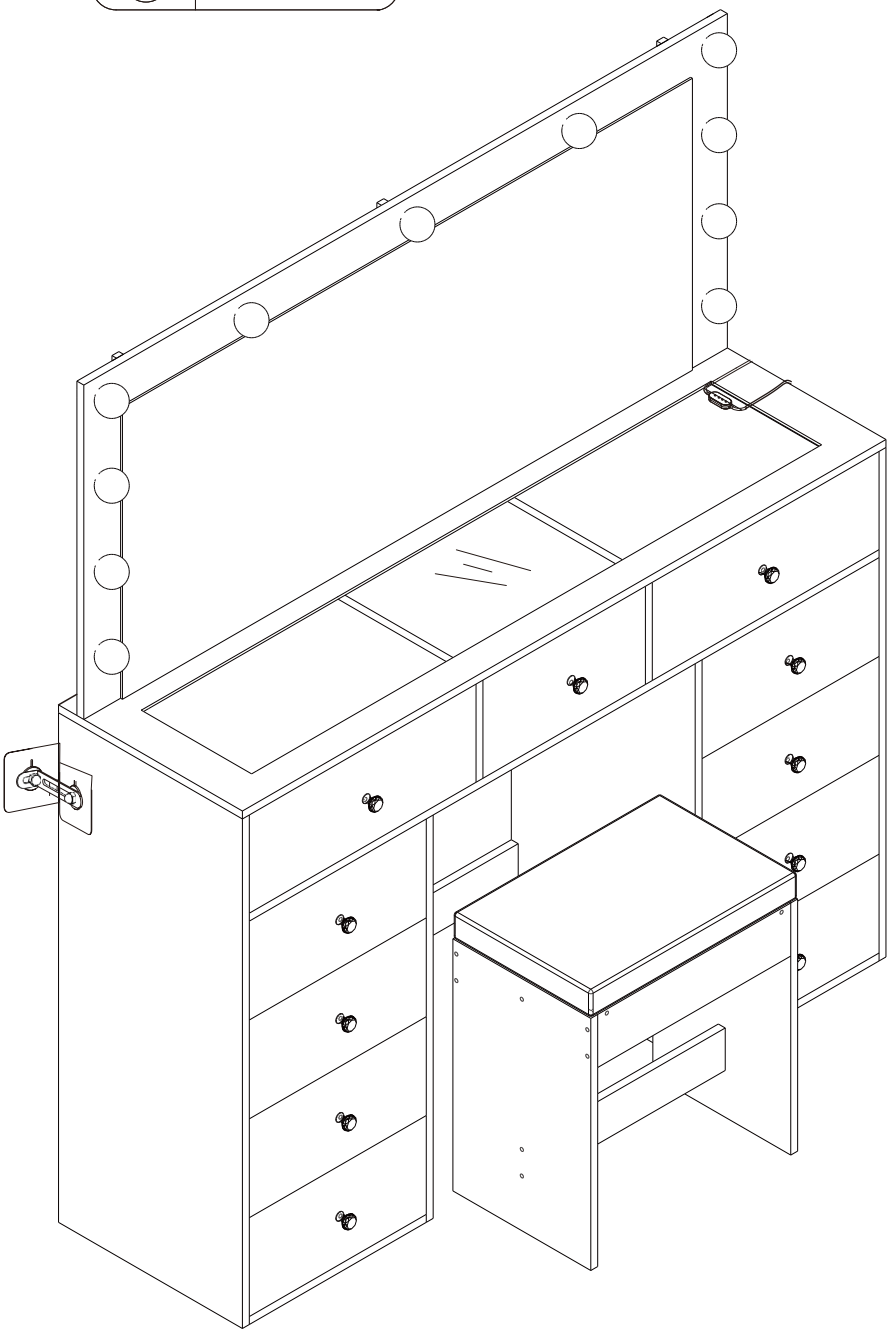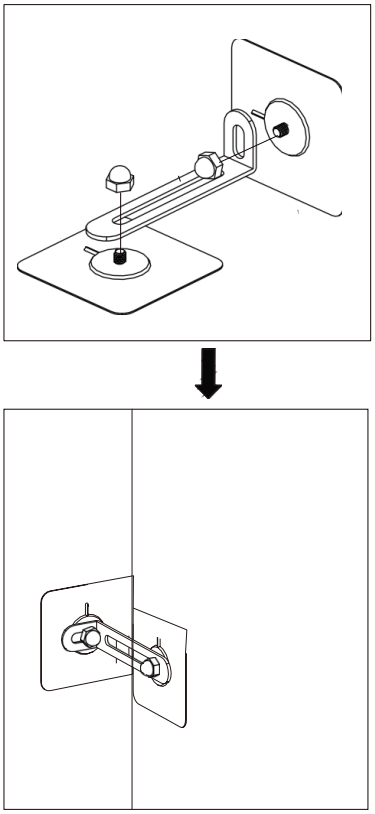
step 25