NOTICE REGARDING HIGH GLOSS PROTECTIVE FOIL AND PRODUCT CARE:
After removing the protective foil from the gloss fronts, the acrylic surface of the boards is still soft and easy to scratch. With air contact, the hygroscopic acrylic layer hardens, and the board becomes more resistant to scratches.
It takes approximately 48 hours for the acrylic layer of the board to fully harden.

DO NOT CLEAN, WIPE, OR POLISH THE ACRYLIC FRONTS FOR 48 HOURS AFTER REMOVING THE PROTECTIVE FOIL!!!

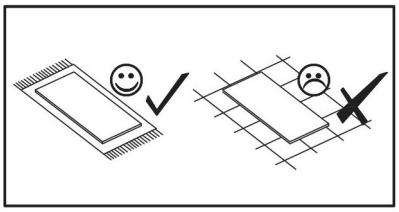

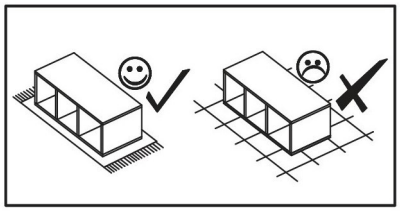

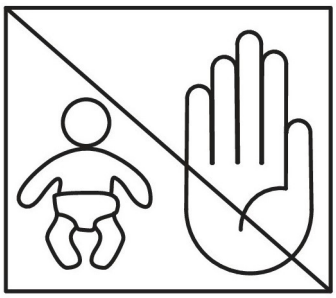

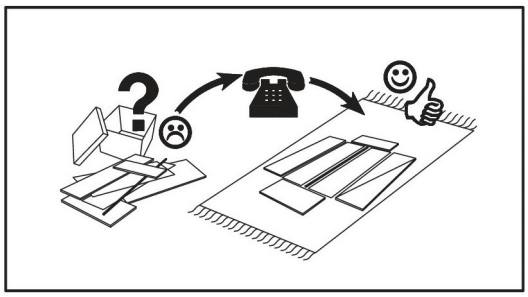

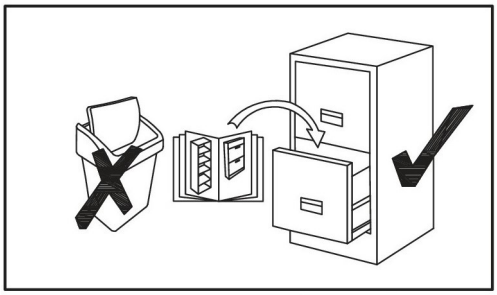

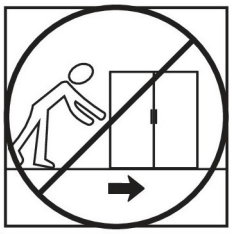

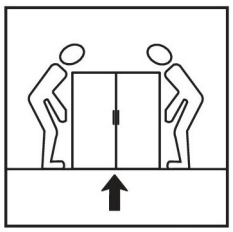

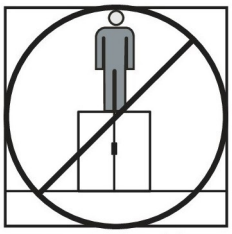

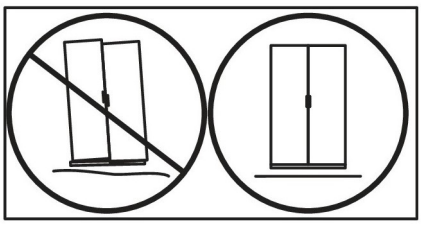

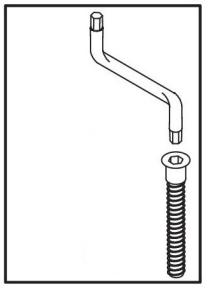

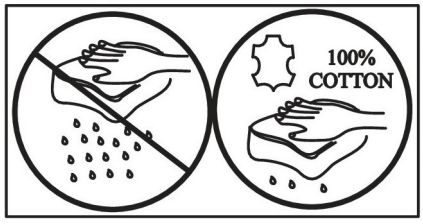
100%
COTTON

%

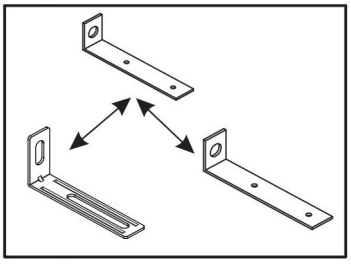

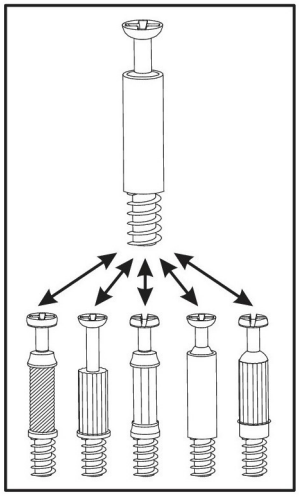

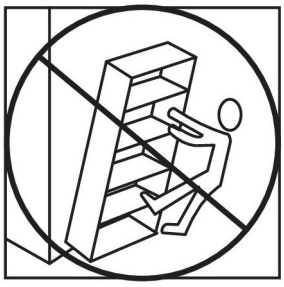

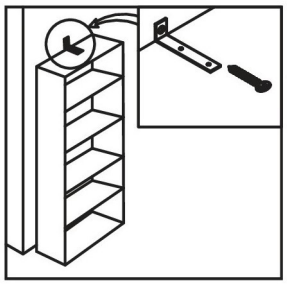

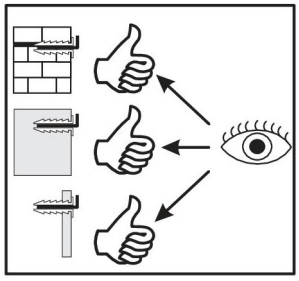

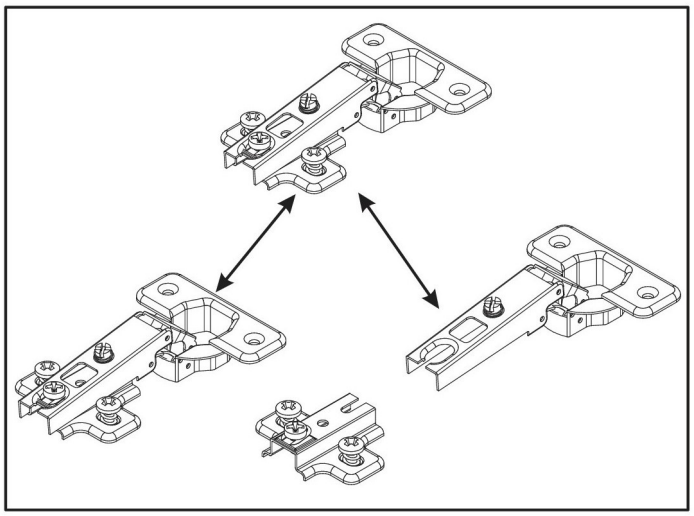

TV STAND
WHITE / BLACK

15 kg

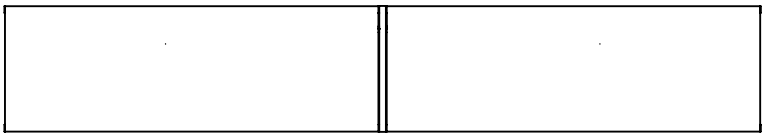

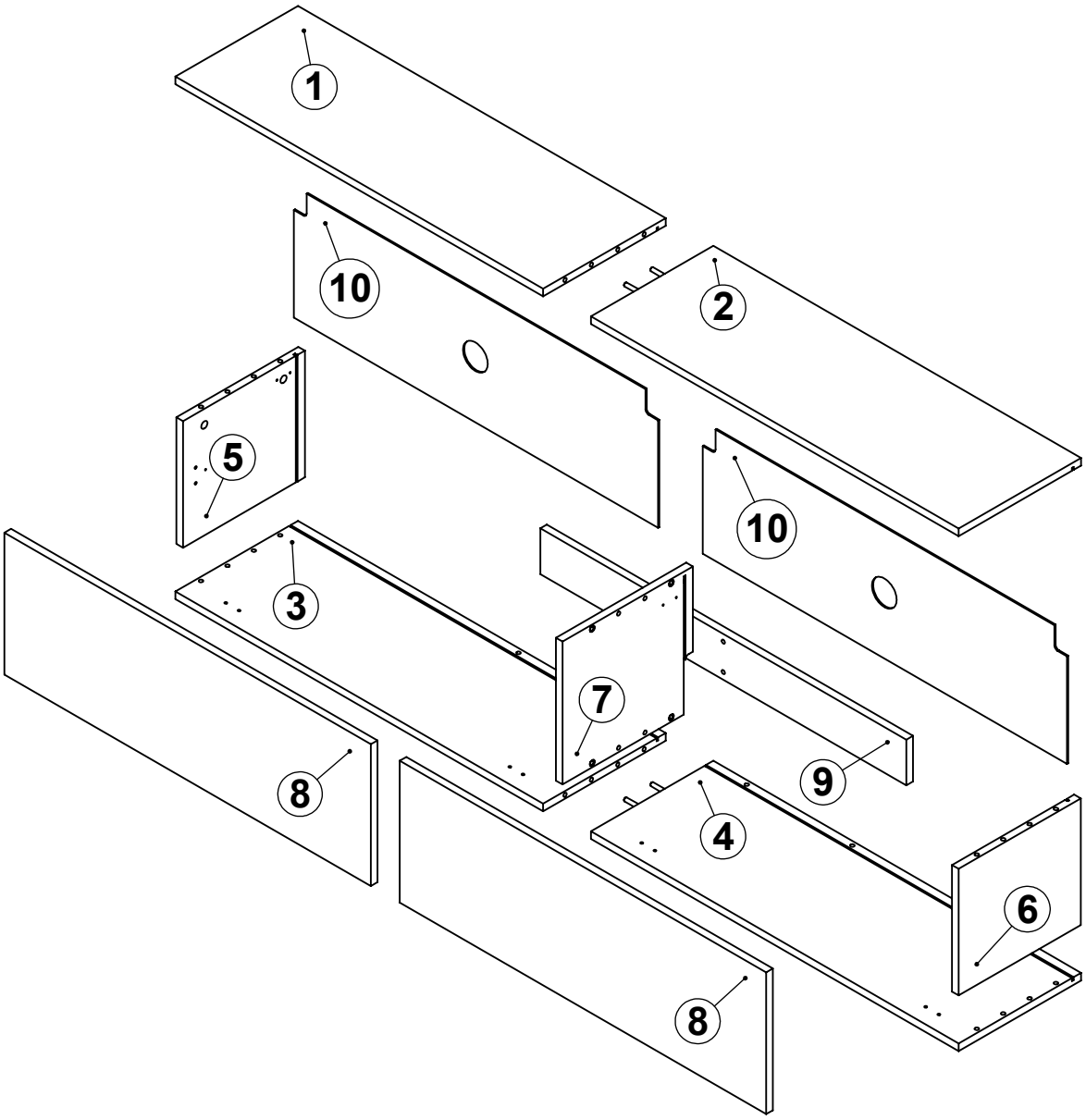

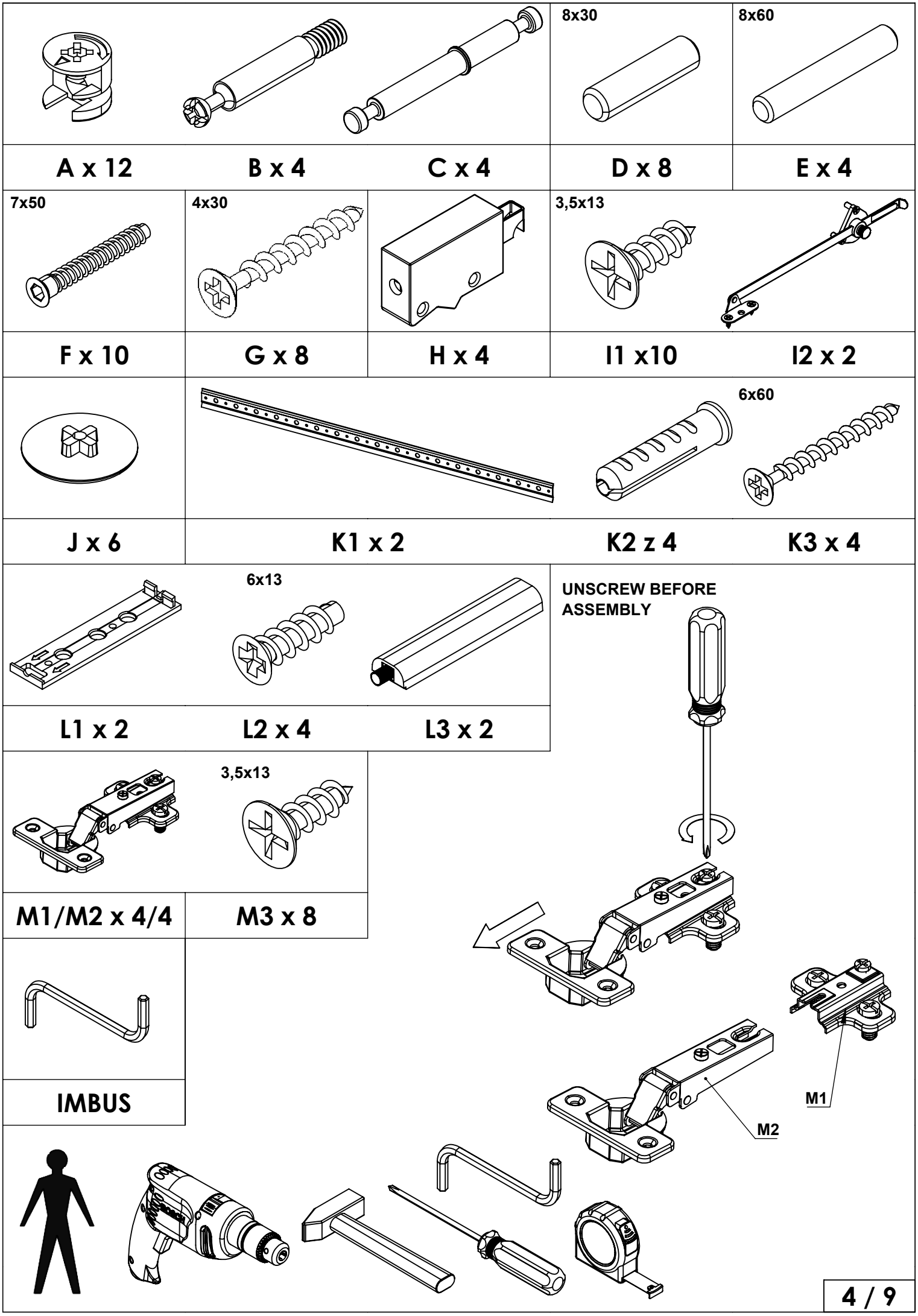
8x30
8x60
A x 12
B x 4
C x 4
D x 8
E x 4
7x50
4x30
3,5x13
F x 10
G x 8
H x 4
I1 x10
I2 x 2
6x60
J x 6
K1 x 2
K2 z 4
K3 x 4
6x13
L1 x 2
L2 x 4
L3 x 2
UNSCREW BEFORE ASSEMBLY
3,5x13
M1/M2 x 4/4
M3 x 8
IMBUS
M1
M2

STEP - 1

Ax8	Bx4	Dx8 (8x30)	Ex4 (8x60)	L1x2	L2x4 (6x13)	M1x4

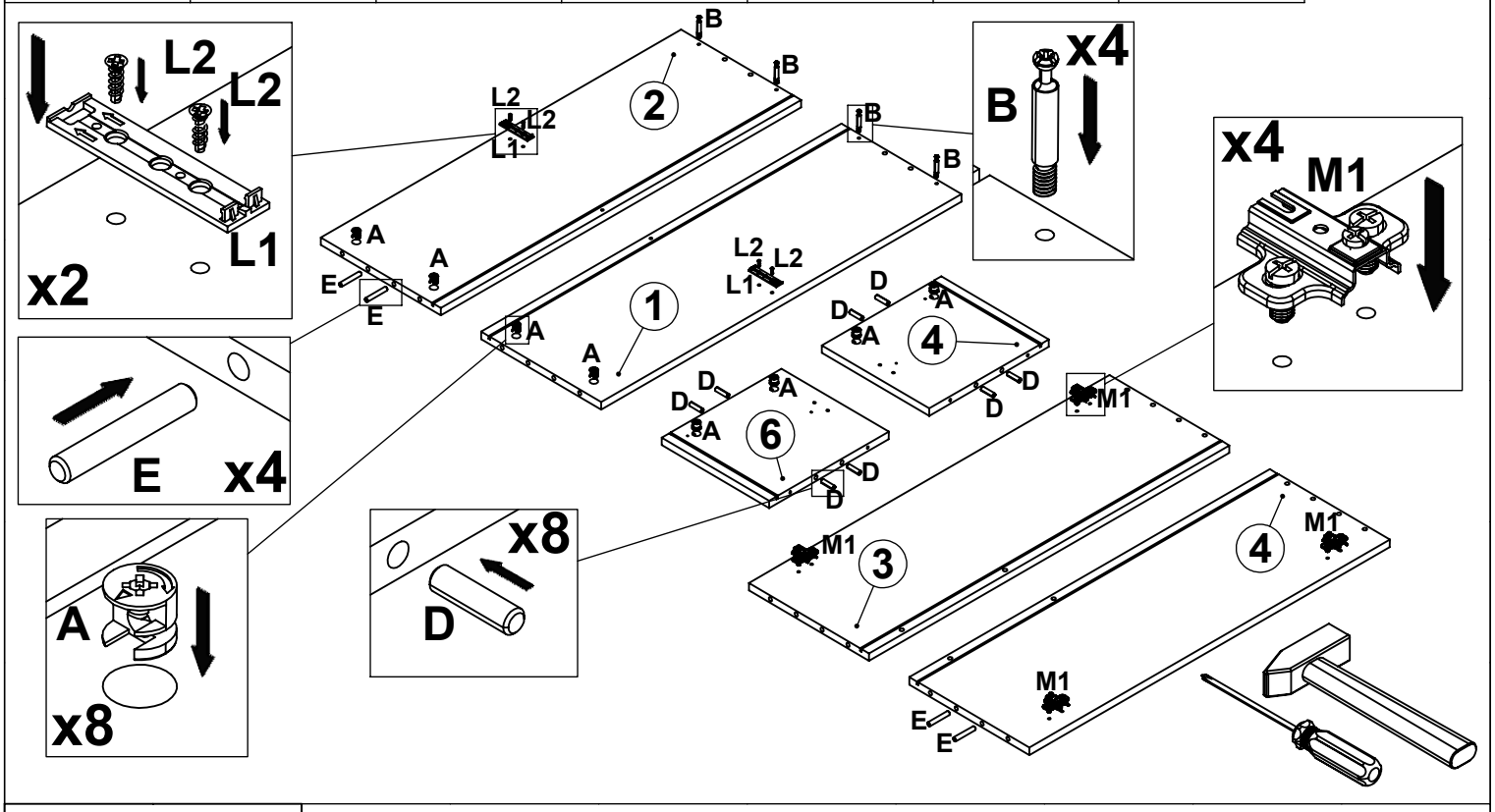

STEP - 2

Ax2	Fx2 (7x50)

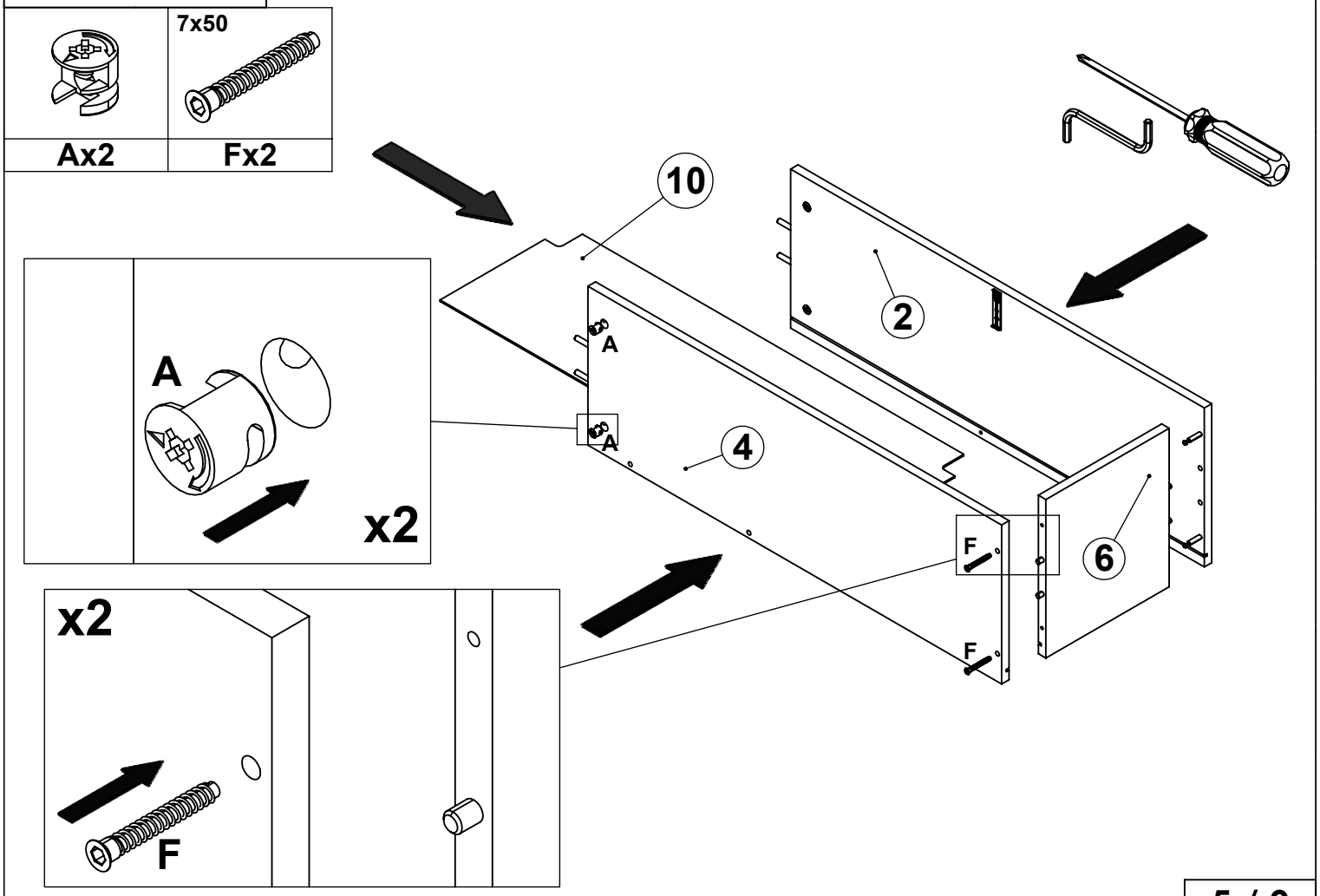

STEP - 3

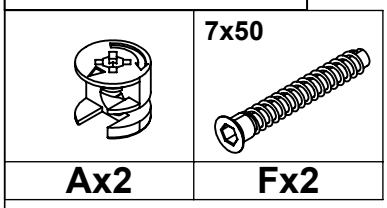

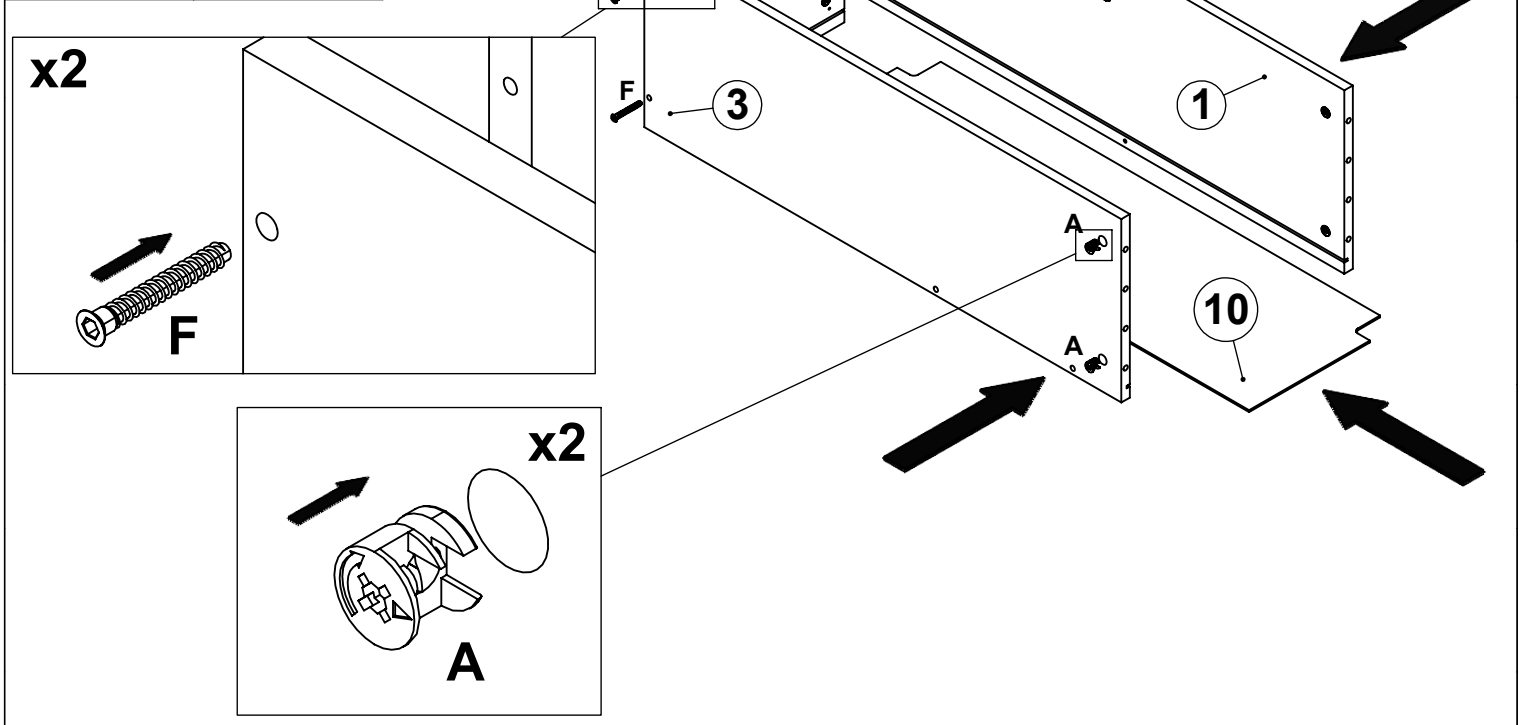

STEP - 4

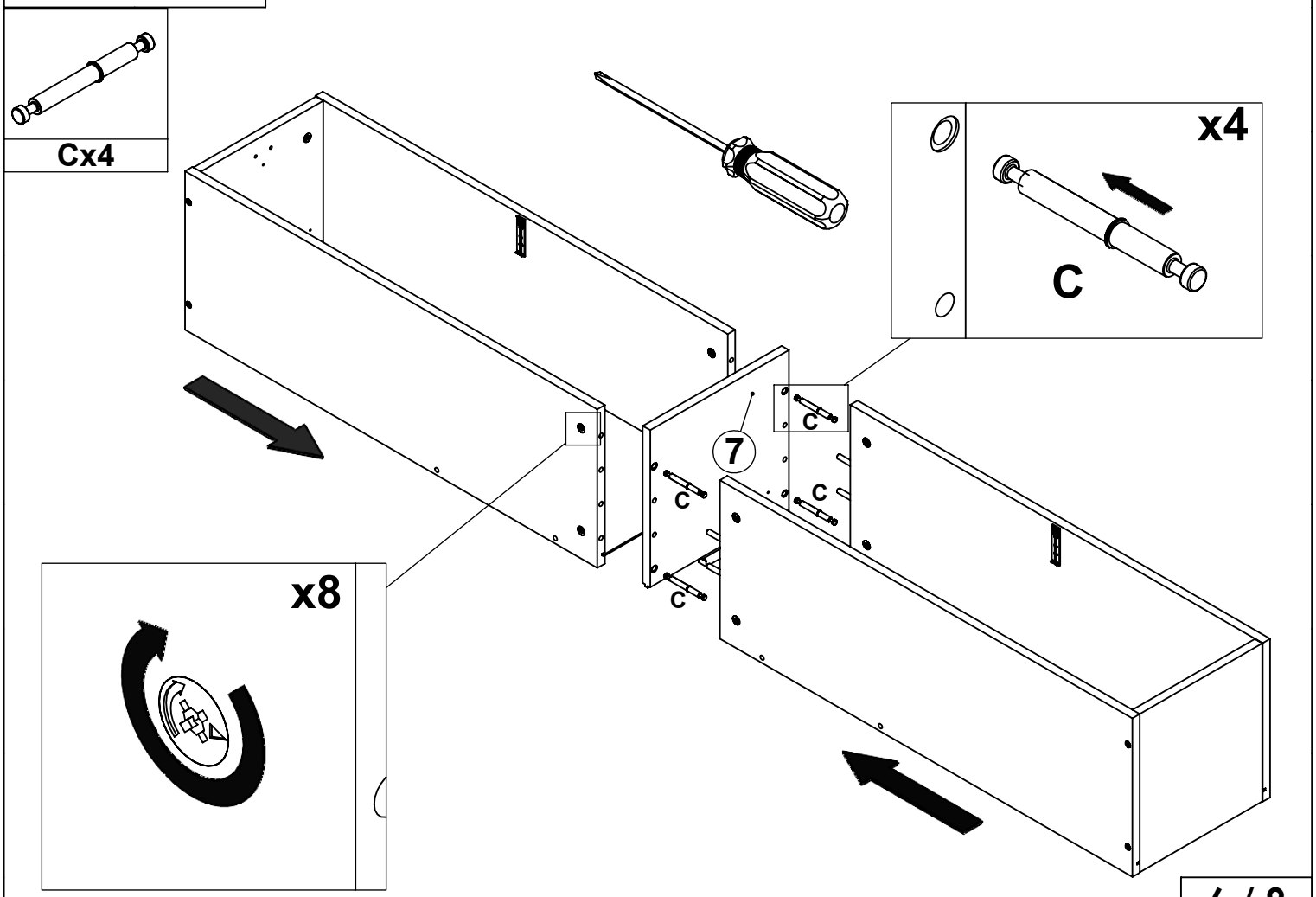

STEP - 5

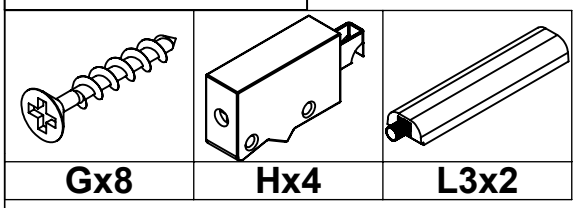

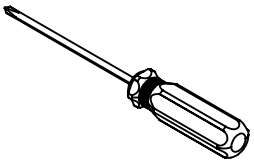

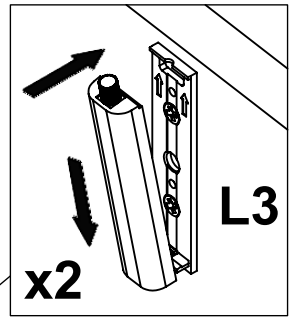

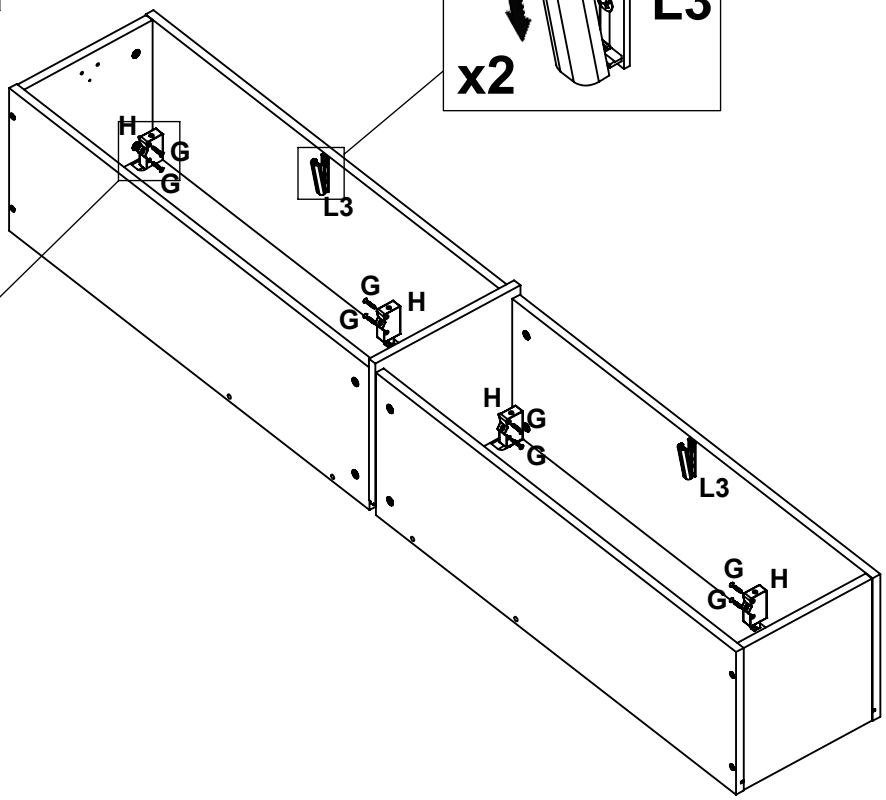

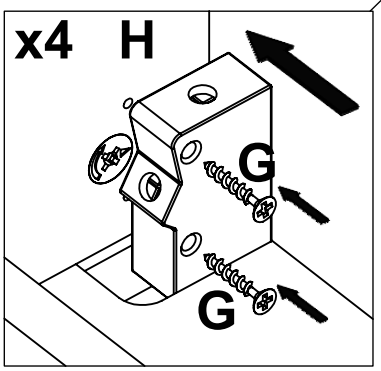

STEP - 6

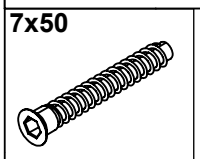

Fx6

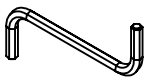

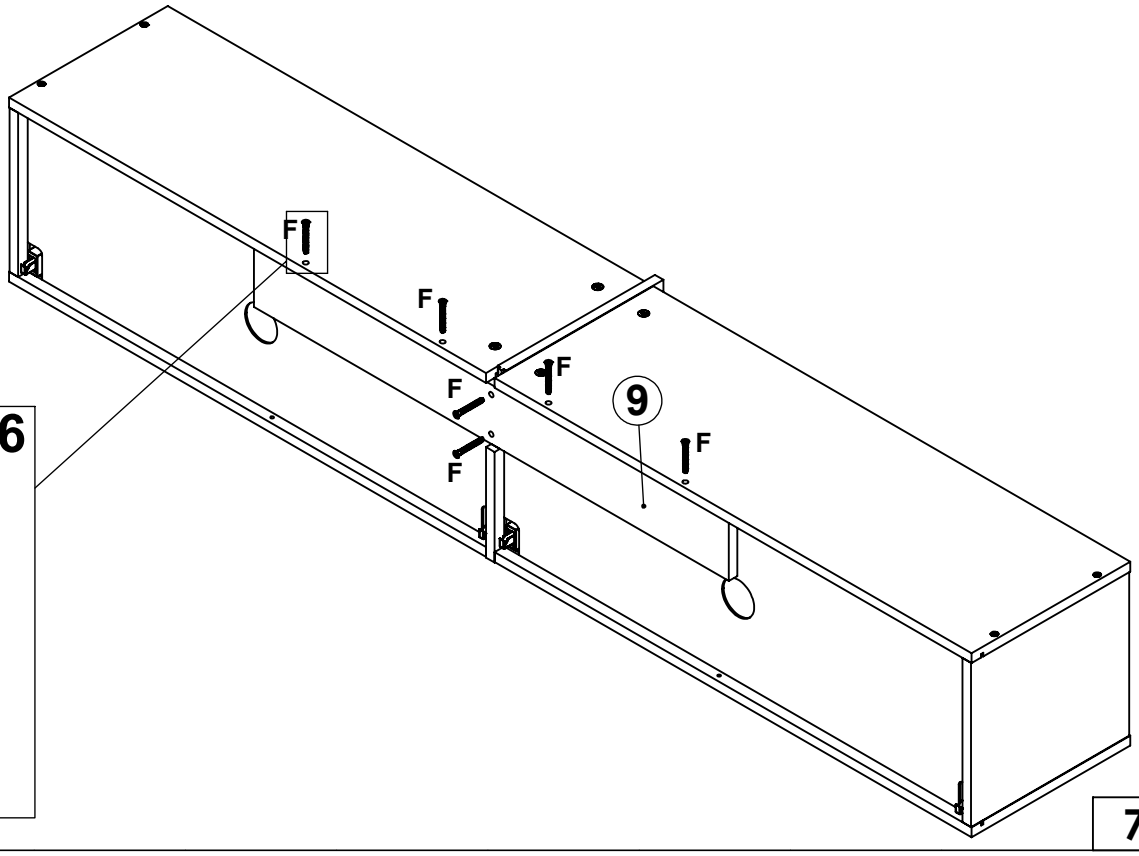

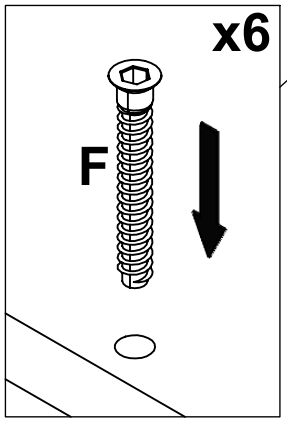

STEP - 7

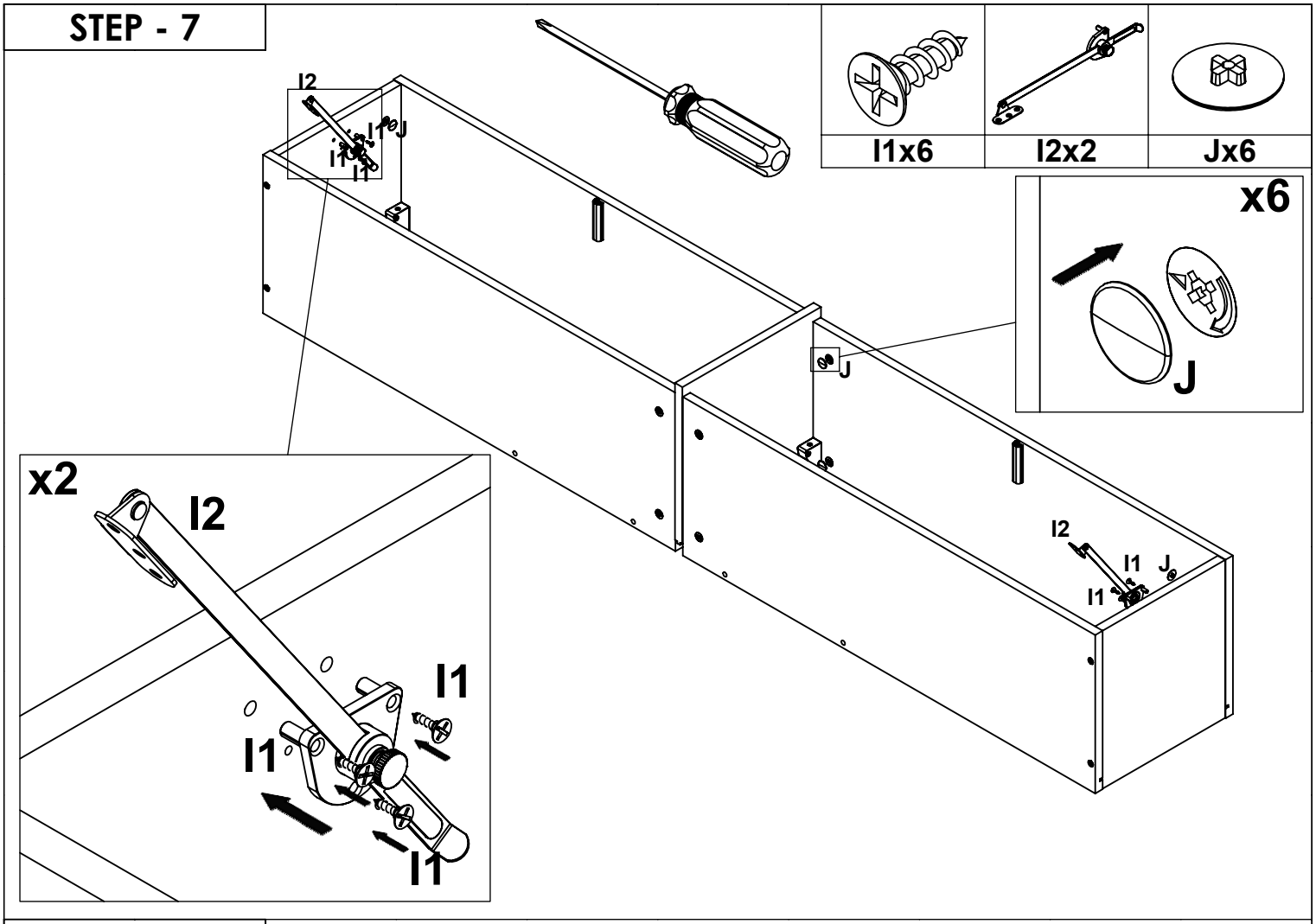
I1x6
I2x2
Jx6
x6
J
x2
I2
I1
I1
I1
I2
I1
J
I1

STEP - 8

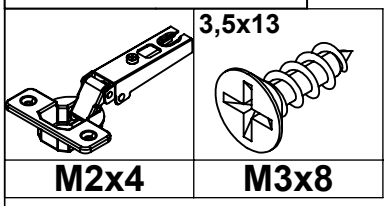
3,5x13
M2x4
M3x8

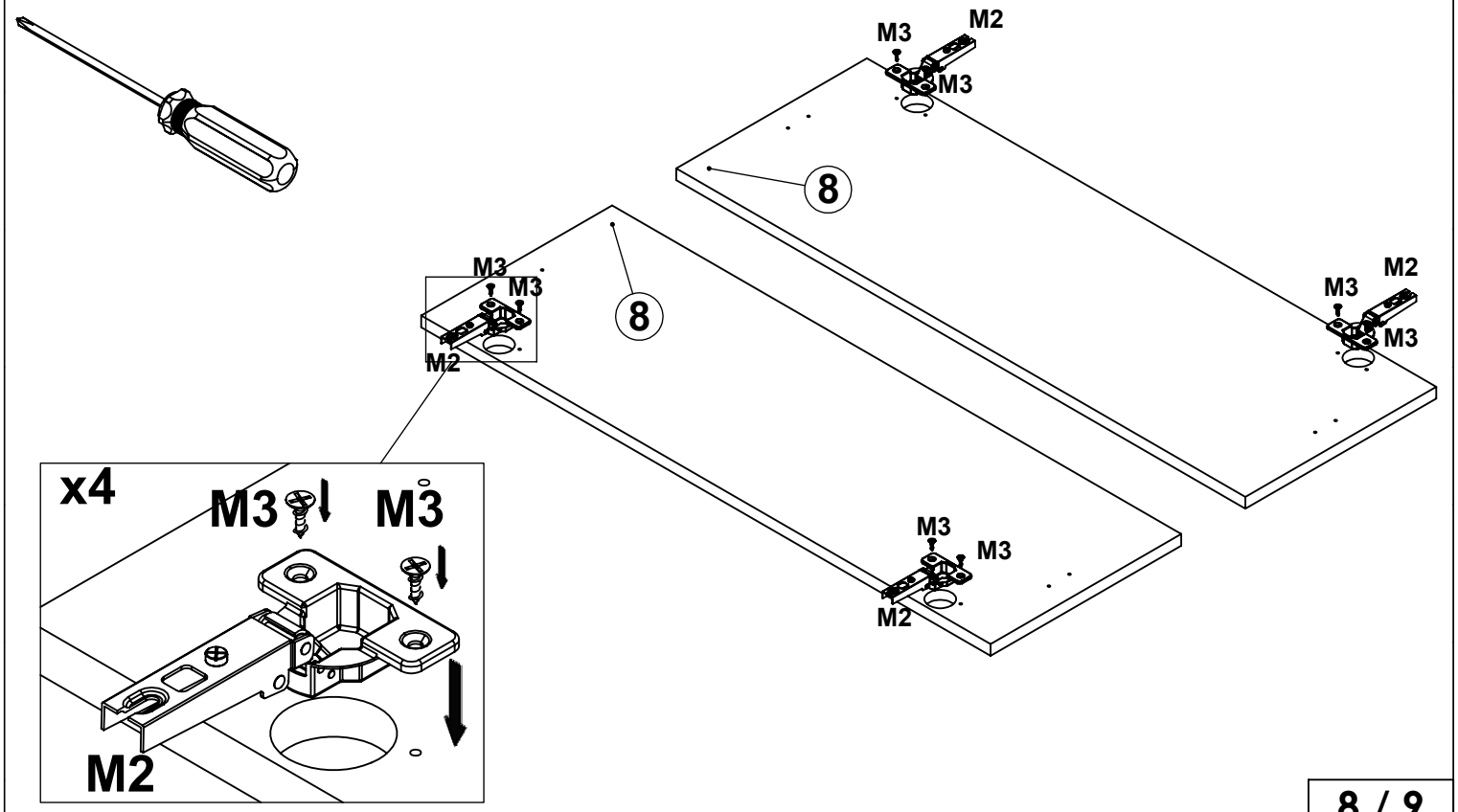
M3
M2
M3
8
M3
M3
M2
8
M2
M3
M3
M3
M3
M2
x4
M3
M3
M2

STEP - 9

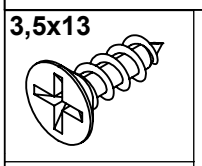

I1x4

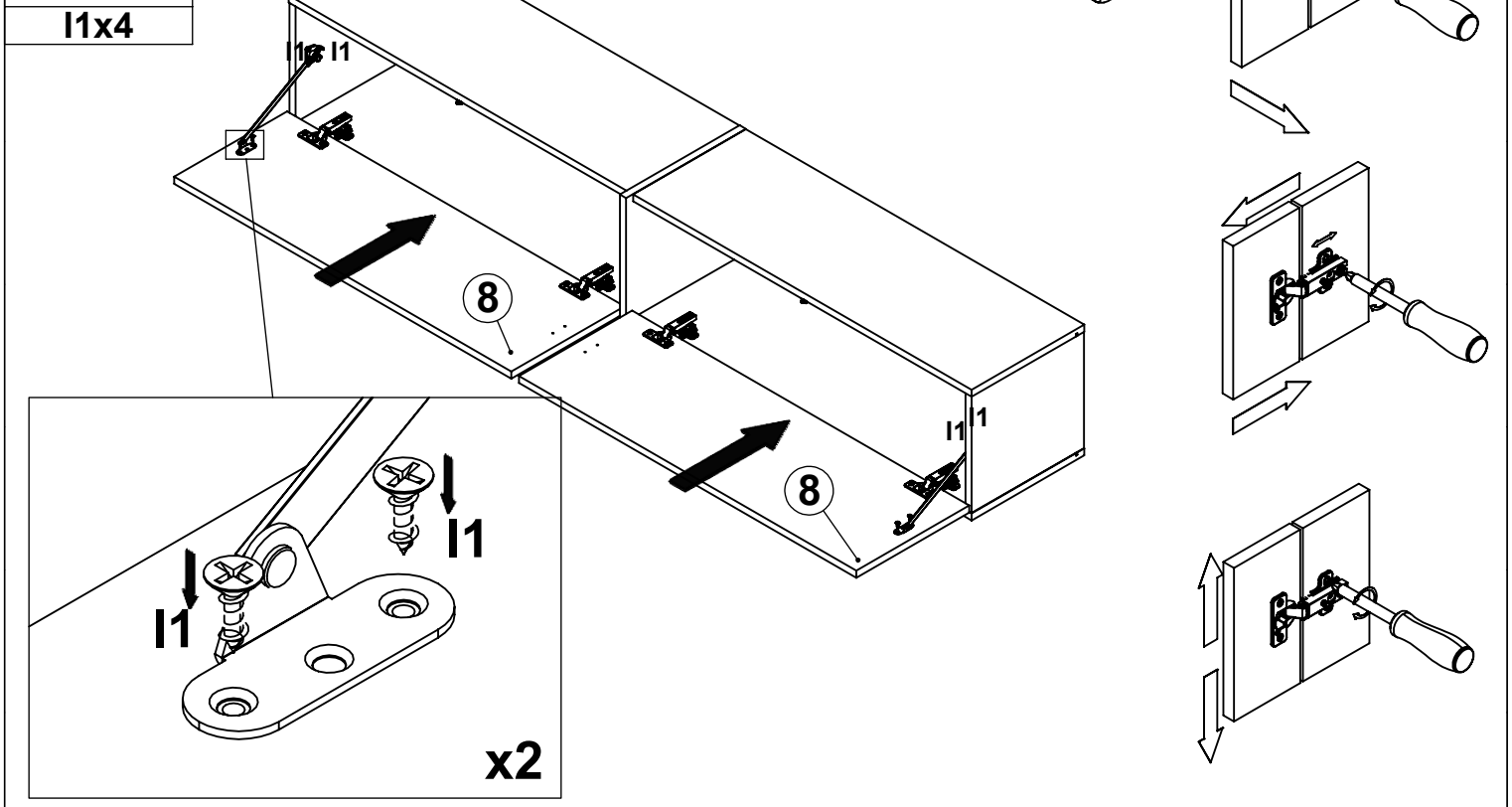

STEP - 10

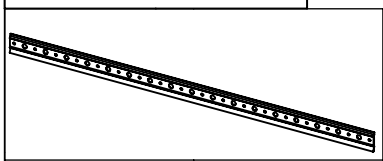	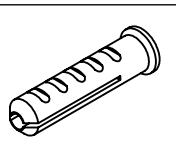	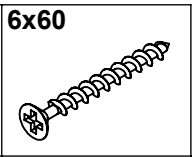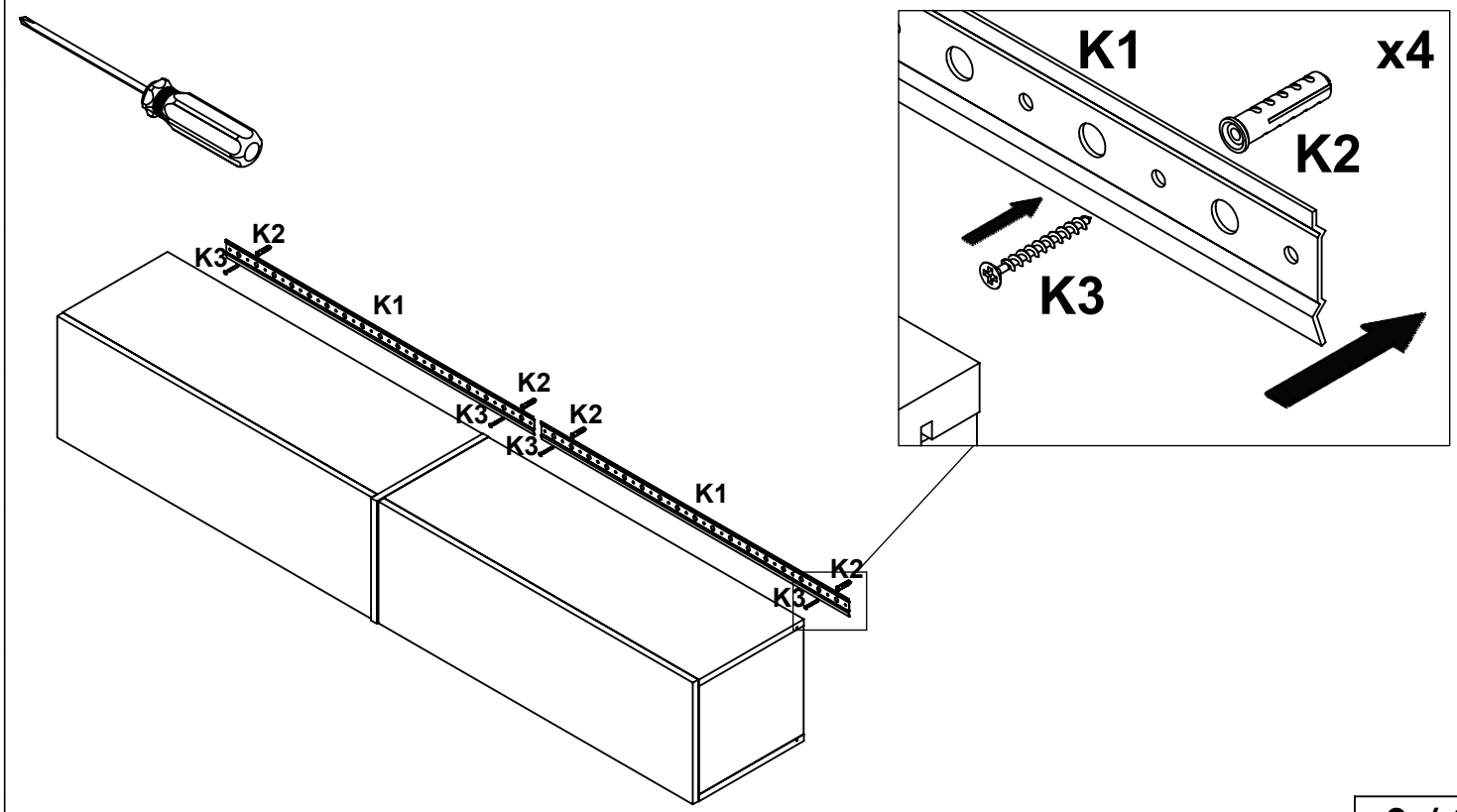 6x60
K1 x 2	K2x4	K3x4