Brand	SKU	Image	Lamp body	Frame	Rods	Conical Rod	Ceiling plate	Glass	Accessories bag	Installation Tools
Susan lighting	P2030-6	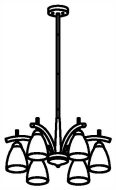		 1PCS	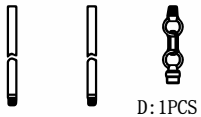 B:1PCS C:2PCS D:1PCS	 A:1PCS	 1PCS	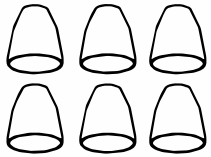 6PCS	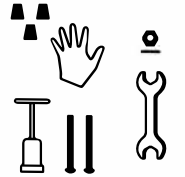	not included 

diagram 1

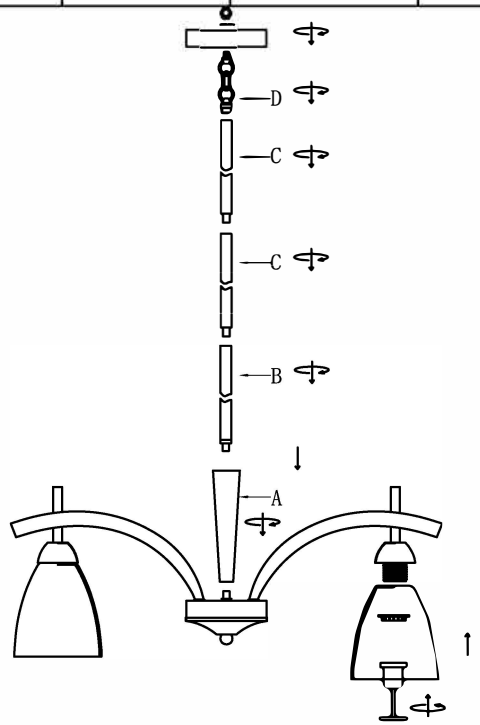

Step 1: Install the tapered tube (A) to the lamp body and tighten it, then connect the ceiling canopy with rod (B) and (C) and (D) lock it. As shown image.

Step 2: Remove the lamp holder ring and install the glass shade, then use the lamp holder ring to lock the lampshade.

⚠ Important Installation Note

If the glass shades appear tilted, uneven, or not perfectly vertical/horizontal after assembly, please note that the lamp arms are pre-welded and non-adjustable. The alignment issue can only be corrected by adjusting the position of the glass shades themselves during installation.

⚠ Critical Alignment Tip

To ensure the shades are perfectly straight and vertical, place the entire fixture on a flat, level table BEFORE installing the glass shades.

1. Lay the fixture on the table, so the arms are resting parallel to the surface.
2. Remove the lamp holder ring from each socket.
3. While the fixture is on the table, place the glass shade onto the socket, adjusting it until it sits perfectlylevel
4. Hold the shade in position and secure it with the lamp holder ring.

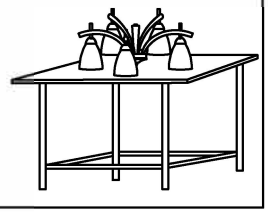

diagram 2

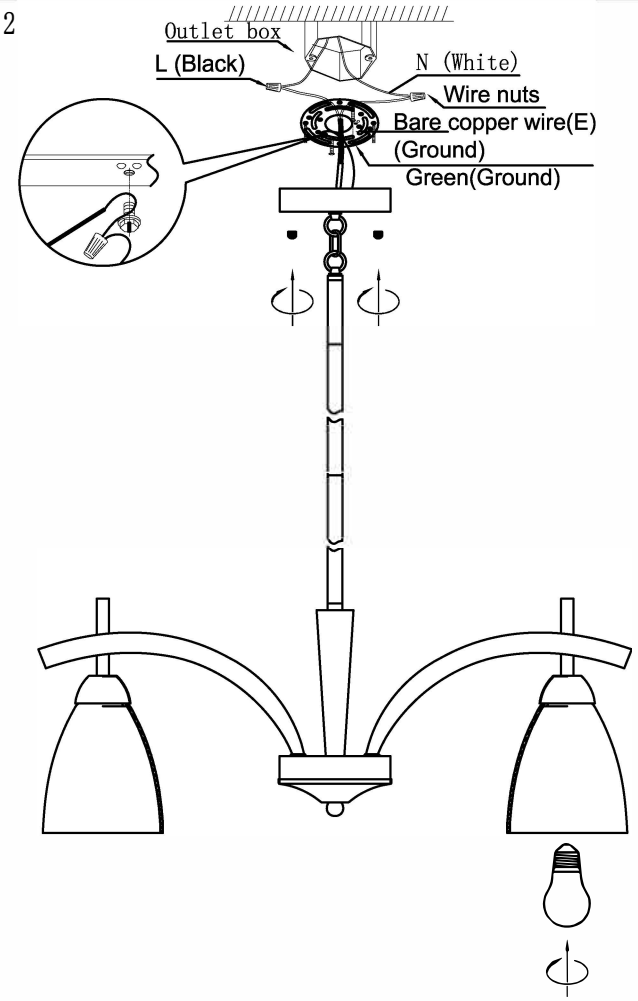

Step 3: Connect the Live wire(L),Null wire (N) and ground wire(E)to the Junction box.

Step 4: Lock the canopy to the ceiling with screw.

Step 5: Install E26 bulbs(Not included)